TURNING AIR INTO SOLUTIONS.

Fan & Blower

Twin City

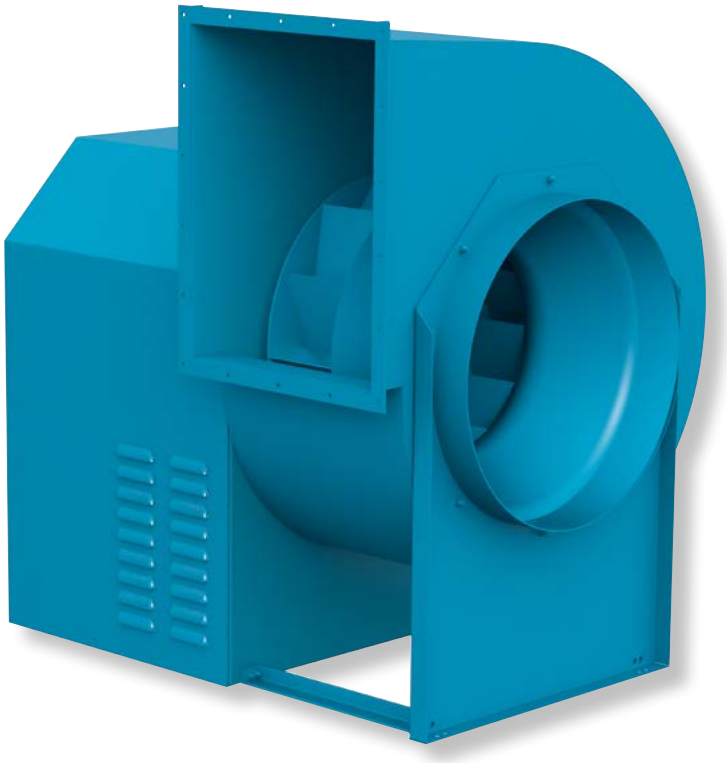

UTILITY SETS

DCV | BCV | BCVR | BCVSH | BAV | DDF | FCV

CATALOG 600
March 2017

Overview

Utility Sets

Model DCV

Now Available with

GRIDSMART™ EC MOTORS

see page 10

Most BCV fans are available for listing under UL 705, UL 762 or UL Emergency Smoke Control Systems.

Twin City Fan & Blower certifies that the Model DCV fans shown herein are licensed to bear the AMCA Seal. The ratings shown are based on tests and procedures performed in accordance with AMCA Publication 211 and AMCA Publication 311 and comply with the requirements of the AMCA Certified Ratings Program. See Fan Selector Program for sound ratings.

The AMCA Certified Ratings Seal applies to air and sound performance for Model DCV sizes 90, 105, 122, 135, 150, 165, 182, and 200. The AMCA Certified Ratings Seal applies to Fan Efficiency Grade for Model DCV Sizes 150, 165, 182, & 200.

Twin City Fan & Blower certifies that the Model FCV fans shown herein on pages 23-25 are licensed to bear the AMCA Seal. The ratings shown are based on tests and procedures performed in accordance with AMCA Publication 211 and comply with the requirements of the AMCA Certified Ratings Program. See Fan Selector Program for sound ratings.

Twin City Fan & Blower certifies that the Model BCV, BCVR, BCVSH and BAV fans shown herein are licensed to bear the AMCA Seal. The ratings shown are based on tests and procedures performed in accordance with AMCA Publication 211 and AMCA Publication 311 and comply with the requirements of the AMCA Certified Ratings Program. See Fan Selector Program for sound ratings.

Twin City Fan's line of utility ventilating sets is one of the most comprehensive in the industry. Utility sets are an excellent choice for general exhaust and supply requirements of commercial and light industrial applications. They are suitable for indoor usage and outdoor usage, with the addition of a weather cover to enclose the motor and drives. Class I and Class II fan housings are continuously welded steel construction and are rotatable to the seven standard discharge positions. Class L fans are lock seam galvanized steel construction and are rotatable to five standard discharge positions.

Typical Applications Include
Data Center Exhaust, General HVAC, Elevator Shaft Exhaust/Pressurization, Restroom Exhaust, Stairwell Pressurization, Industrial Ovens, Vehicle Exhaust Generator Room Ventilation, Swimming Pool Exhaust, Kitchen Exhaust, Dishwasher Exhaust, Elevator Shaft Exhaust/Pressurization, Emergency Smoke Exhaust, Stairwell Pressurization

Arrangements
Available in Arrangement 4 (Direct Drive) & Arrangement 10 Belt Driven) configurations

Wheel Types
Flat-Bladed Backward Inclined, Airfoil, Forward Curved

Standard Construction
Class L, I & II

Optional Construction
High Temperature, Special Materials, Spark Resistant, UL 705, UL 762, UL Smoke & Heat, Seismic

Certifications
AMCA Sound/Air and FEG, UL 705 Listed for Electrical, UL 762 Listed for Grease-Laden Air, UL Listed for Smoke Control Systems, OSHPD Seismic - OSP-0195-10

Fan & Blower Twin City

For complete product performance, drawings, and available accessories, Download Fan Selector 10 at tcf.com.

Overview

Models

General HVAC Fans

DCV (Direct Drive)
Backward inclined wheel
10.5" to 20" wheel diameters
Airflow to 8,200 CFM
Static pressure to 2.5" w.g.

BCV (Belt Driven)
Backward inclined wheel
10.5" to 60" wheel diameters
Airflow to 78,660 CFM
Static pressure to 8" w.g.

BAV (Belt Driven)
Backward inclined airfoil wheel
12.25" to 36.5" wheel diameters
Airflow to 32,100 CFM
Static pressure to 8" w.g.

DDF (Direct Drive)
Forward curved wheel
6" to 10.5" wheel diameters
Airflow to 2,100 CFM
Static pressure to 1.75" w.g.

FCV (Belt Driven)
Forward curved wheel
7.5" to 36.5" wheel diameters
Airflow to 29,100 CFM
Static pressure to 5" w.g.

General HVAC
Supply and Exhaust

Kitchen & Restaurant Fans

BCVR (Belt Driven)
Backward inclined wheel
10.5" to 36.5" wheel diameters
Airflow to 29,100 CFM
Static pressure to 8" w.g.
Temperatures up to 300°F

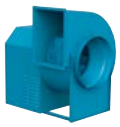

Smoke & Heat Applications

BCVSH (Belt Driven)
Backward inclined wheel
12.25" to 60" wheel diameters
Airflow to 78,660 CFM
Static pressure to 8" w.g.

Temperature Rating
500°F for 4 Hours
1000°F for 1 Hour

Smoke & Heat (Emergency Smoke Control)
and Restaurant Exhaust

UTILITY SET MODELS

Model DCV

Model BCV
Class L

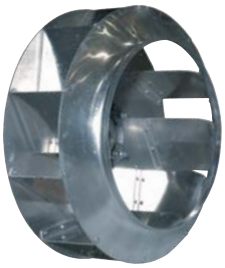

Wheels for DCV & BCV Class L & Class I sizes 122 through 270 are constructed of riveted aluminum. For operating temperatures over 250°F, a welded steel wheel is provided.

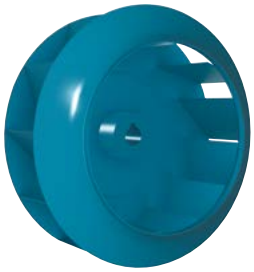

Wheels for BCV Class L & Class I sizes 300 through 365, as well as all BCV Class II sizes, are constructed of welded steel.

DCV (Direct Drive)

Direct Drive model featuring a flat bladed backward inclined wheel. Utilized in applications requiring high CFM at low and medium pressures. Model DCV can handle clean air streams.

10.5" to 20" wheel diameters
Airflow to 8,200 CFM
Static pressure to 2.5" w.g.

BCV (Belt Driven)

Belt driven model featuring a flat bladed backward inclined wheel. Utilized in applications requiring high CFM at low to medium pressures. Model BCV can handle clean air or corrosive airstreams.

10.5" to 60" wheel diameters
Airflow to 78,660 CFM
Static pressure to 8" w.g.

BCVR (Belt Driven - Kitchen Exhaust)

BCVR packages include V-belt drives, motor, UL weather cover, bolted access door, drain connection, backplate fins, UL 762 labels and nameplate. For UL 762, grease pans, disconnect switches, stacks or fan platforms are not included. Fans must be installed per local codes and NFPA 96.

10.5" to 36.5" wheel diameters
Airflow to 29,100 CFM
Static pressure to 8" w.g.
Temperatures up to 300°F

BCVSH (Belt Driven - Smoke & Heat)

BCVSH fans come standard with V-belt drives with a minimum of two belts, motor, UL weather cover, backplate fins, shaft seal, shaft cooler, high temperature grease, insulated drive stand and UL Emergency Smoke Control Systems labels and nameplate. Fans must be installed per local codes and NFPA 96.

12.25" to 60" wheel diameters
Airflow to 78,660 CFM
Static pressure to 8" w.g.

Temperature Rating
500°F for 4 Hours
1000°F for 1 Hour

BAV (Belt Driven)

Belt driven model featuring a backward inclined airfoil wheel. Slightly higher efficiencies than the BCV, but recommended for clear air applications only. Airflow capacity from 690 to 32,100 CFM and static pressures to 8" w.g.

Wheels for BAV sizes 245 and smaller are constructed of aluminum using extruded aluminum blades. For sizes 270 and larger, a welded steel wheel is provided.

12.25" to 36.5" wheel diameters
Airflow to 32,100 CFM
Static pressure to 8" w.g.

Model BAV
Steel Airfoil Wheel

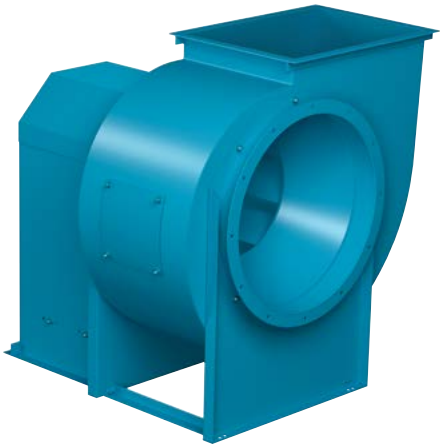

DDF (Direct Drive)

DDF fans are ideal for applications where general ventilation or exhaust is required in small areas such as washrooms, restaurant counters, exhaust hoods, and similar environments. All DDF fans are equipped with riveted steel wheels.

6" to 10.5" wheel diameters
Airflow to 2,100 CFM
Static pressure to 1.75" w.g.

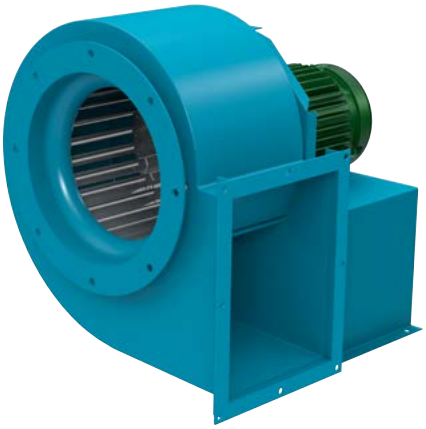

Model DDF

FCV (Belt Driven)

Belt driven model featuring a forward curved wheel. Ideal for high volume, low pressure applications. Also suitable for certain high temperature requirements. All FCV fans are equipped with riveted steel wheels.

7.5" to 36.5" wheel diameters
Airflow to 29,100 CFM
Static pressure to 5" w.g.

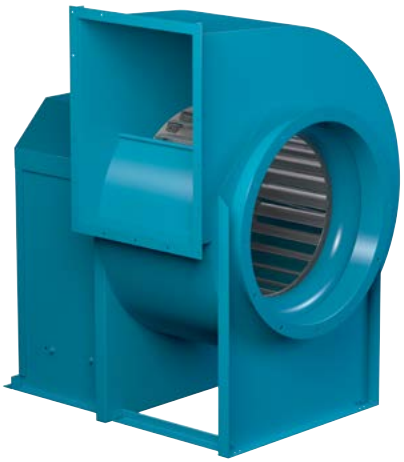

Model FCV

Model DDF & FCV
Forward Curved
Riveted Steel Wheel

CONSTRUCTION FEATURES

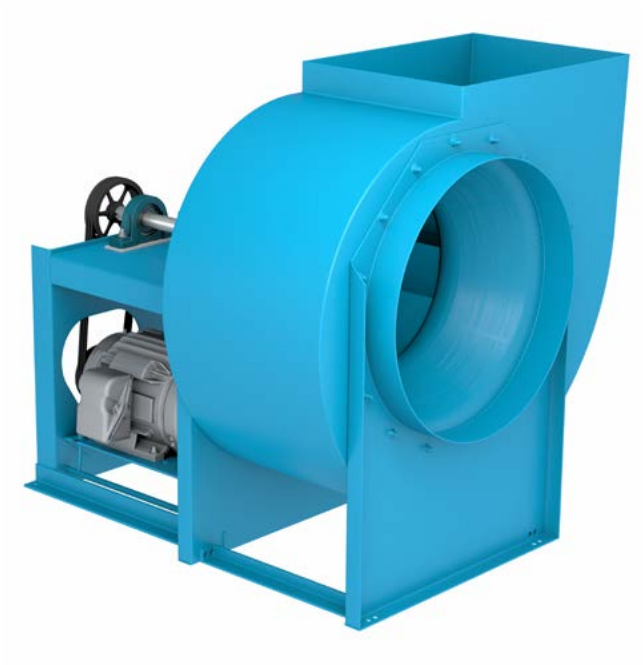

Model BCV
Class I

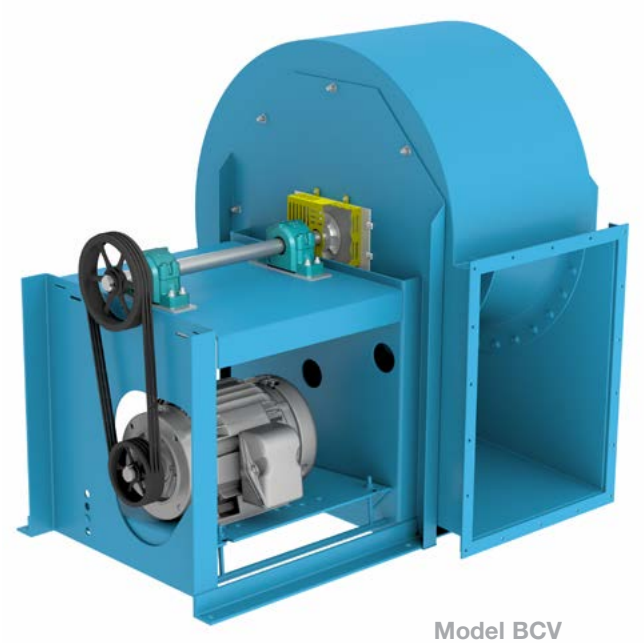

Model BCV
Class II

Class L, I and II Construction

Inlet Cone
Deep spun cone, aerodynamically designed for smooth air entry into the wheel.

Motor/Bearing Pedestal (Class I Shown)
Large open motor compartment allows complete access to motor and motor base for quick and easy servicing and belt tension adjustment.

Motor
Available in various sizes, voltages, enclosures, and efficiencies to meet the needs of any application.

Drive
Adjustable or fixed pitch, 1.2 or 1.5 service factor V-belt drives with cast iron sheaves, and V-belts designed to be oil and heat resistant, and to dissipate static electricity.

Bearings
Heavy duty grease lubricated pillow block bearings selected for minimum average life (AFBMA L-50) of at least 200,000 hours at maximum class speed.

Shaft
AISI 1045, turned, ground and polished for accuracy. Designed to provide first critical speed of at least 1.43 times the maximum class speed.

Outlet Flange
Standard on all DCV, Class L sizes, and Class II sizes 222 and larger.

Fan & Blower
Twin City

ROTATION & DISCHARGES

CLOCKWISE (CW) - ROTATION & DISCHARGE (ROTATION VIEW FROM DRIVE SIDE)

UBD
Upblast
CW 360

TAU
Top Angular Up
CW 45

THD
Top Horizontal
CW 90

TAD
Top Angular Down
CW 135

DBD
Downblast
CW 180

BHD
Bottom Horizontal
CW 270

BAU
Bottom Angular Up
CW 315

COUNTER CLOCKWISE (CCW) - ROTATION & DISCHARGE (ROTATION VIEW FROM DRIVE SIDE)

UBD
Upblast
CCW 360

TAU
Top Angular Up
CCW 45

THD
Top Horizontal
CCW 90

TAD
Top Angular Down
CCW 135

DBD
Downblast
CCW 180

BHD
Bottom Horizontal
CCW 270

BAU
Bottom Angular Up
CCW 315

AVAILABLE DISCHARGES	
BCV Class L	BAU, BHD, TAU, THD, UBD
DCV	BAU, BHD, TAU, THD, UBD
BCV, Size 90-105	BAU, BHD, TAU, THD, UBD
BCV	BAU, BHD, DBD, TAD, TAU, THD, UBD
BCVR	BHD, DBD, THD, UBD
BCVSH	BHD, DBD, THD, UBD
BAV	BAU, BHD, DBD, TAD, TAU, THD, UBD
DDF	BAU, BHD, TAU, THD, UBD
FCV, Size 75-105	BAU, BHD, TAU, THD, UBD
FCV	BAU, BHD, DBD, TAD, TAU, THD, UBD

OPTIONS/ACCESSORIES

1 **Belt Guard** Standard belt guards are of the open back style, and are readily removable for belt or pulley adjustments. For OSHA-style belt guards, see notes on weather cover.

2 **Gravity Dampers** Flange mounted damper is available for exhaust or supply applications. If outlet velocity of the fan is less than 600 fpm, a spring kit must be specified.

3 **Inlet and Outlet Screens** Safety screens are available for mounting in the fan inlet or outlet in non-ducted applications.

4 **Standard Drain** All fans are constructed with a weep hole in the bottom of the housing. A threaded pipe coupling is welded to the lowest point in the housing scroll to permit wash water or condensation to drain from the fan. All fans are constructed with a weep hole in the bottom of the housing.

5 **Bolted Access Door** Bolted access door allows for inspection and maintenance of internal fan components.

6 **Extended Lube Lines** Allow for easy lubrication of bearings on belt driven units without disassembly by extending polyethylene lines from fan bearings to exterior of the guard.

7 **Vibration Isolation - Spring** Spring type vibration isolation mounts are available to reduce the transmission of fan vibration in 1" or 2" deflection.

8 **Disconnect Switch (NEMA 4)** A NEMA 4, water and dust tight, disconnect is available shipped loose for field mounting and wiring or factory mounted and wired externally.

OPTIONS/ACCESSORIES

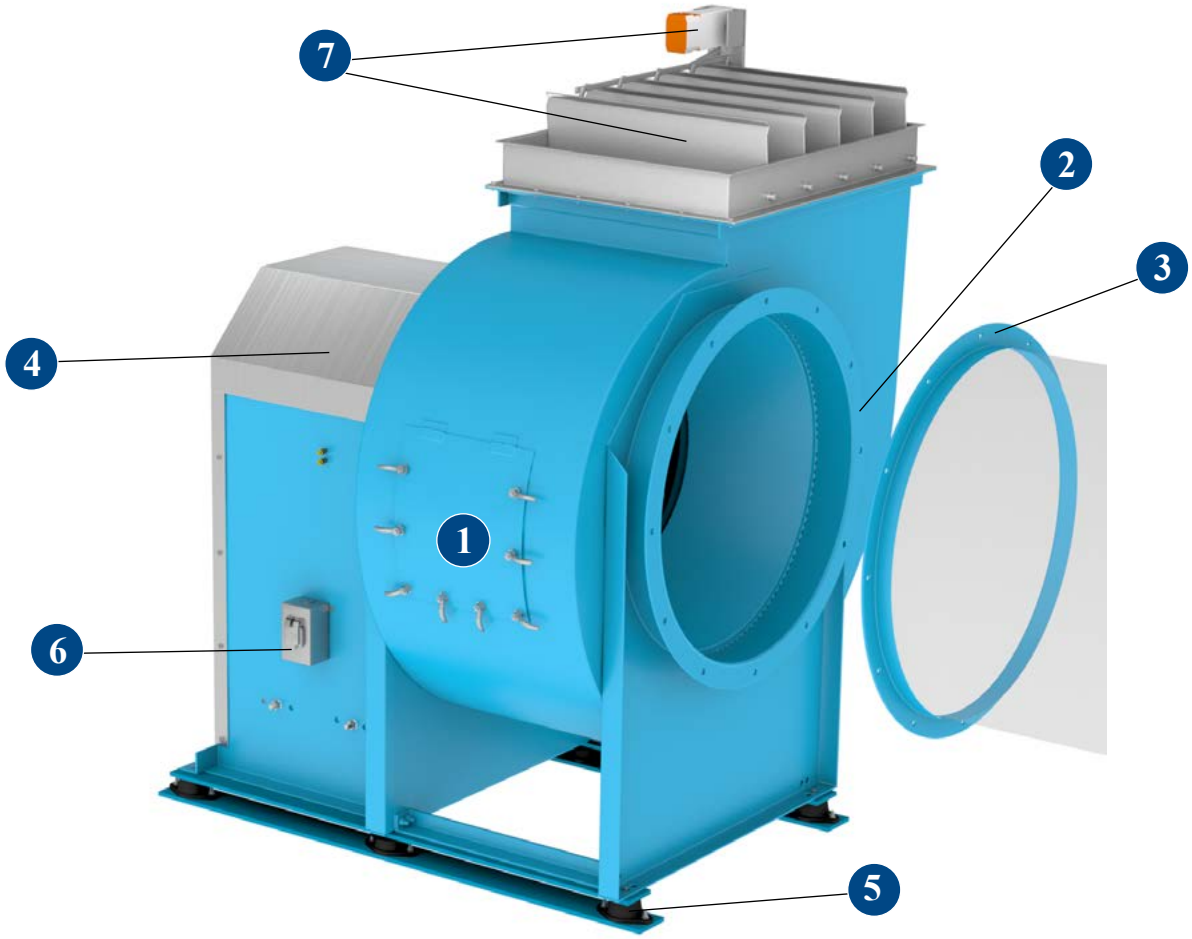

1 **Quick Open Access Doors** For quick wheel inspection and maintenance. Access doors are specified where examination and cleaning of the fan interior is required.

2 **Inlet Flange** Inlet and outlet flanges with prepunched mounting holes are available on all sizes to provide a bolted connection to ductwork.

3 **Inlet Companion Flange** Companion flanges are commonly connected to a user's duct for easy installation of flexible connections between the fan and duct. Companion flanges and flex connectors are punched to match the fan's inlet or outlet punching.

4 **Weather Cover** An easily removable weather cover is available for either Class L, I or Class II fans. The weather cover provides complete protection for the motor, fan bearings, and V-belt drive. If an OSHA-style belt guard is specified on vent sets, a weather cover will be supplied.

5 **Vibration Isolation - RIS Rails** Vibration Rails with RIS Isolators are designed to limit forces transmitted to the support structure of an operating fan. Constructed of structural angle, the rails extend the distance between mounting points distributing a more even load to the isolators. Rubber-in-shear type isolators and flexible connectors at inlet and outlet are required.

6 **Disconnect Switch (NEMA 3R)** A NEMA 3R, rain proof, disconnect is available shipped loose for field mounting and wiring or factory mounted and wired externally.

7 **Motorized Shutter** Motorized shutters are recommended for low CFM applications to assure unrestricted airflow.

OTHER ACCESSORIES:

- Shaft Seal
- Shaft Cooler
- 4" Raised Access Door

ELECTRONICALLY COMMUTATED MOTORS

Model DCV
With GridSmart™ EC Motor

Twin City Fan offers its own line of custom engineered Electronically Commutated (EC) motors. Electronic commutation is the latest motor technology to be used in direct drive fans. Also known in the industry as Brush Free or Brushless DC, the EC motors utilize an electronic circuit board to control the functionality of the motor. The motor operates off of single phase AC power, which is converted to DC power within the motor's circuitry. TCF has motor options available for 115V or 208-230V single phase electrical power. The result is a highly efficient motor, even at part load, with an expanded speed control range and a variety of speed control options from which to choose. EC motors are available in ODP, TENV and TEFC enclosures.

GRIDSMART™ EC MOTORS

Benefits

- Efficiencies up to 85%
- Constant efficiency as the motor speed is varied
- Up to 66% energy savings over traditional PSC motors
- Performance range comparable to a belt drive fan with reduced maintenance benefits of a direct drive fan
- 80% usable turndown range as compared with 40% maximum on PSC motors
- Soft start gives fans smooth, quiet start
- Lower operating temperatures result in longer life and reduces energy consumption
- Heavy duty ball bearings are permanently lubricated
- Elimination of VFD results in lower initial cost

1/4HP to 1HP
GridSmart™ EC Motors

EC Motor Options

1/4HP to 1HP

- 115V single phase
- ODP Enclosure
- Motor mounted speed control dial as standard
- 0-10VDC control leads as standard
- Available with remote mounted speed control dial

1HP & 2HP

- 1HP - 115V, 208-230V, single phase
- 2HP - 208-230V, single phase
- TEFC enclosure (totally enclosed fan cooled)
- Available with motor mounted speed dial or 0-10VDC control lead

1HP to 3HP - 3 Phase

- 230-460V, 3 phase
- Open enclosure
- Available with remote mounted speed control dial

1HP & 2HP
GridSmart™ EC Motors

1HP to 3HP 3 phase
GridSmart™ EC motors

High Temperature Construction

Standard fan design options are available to handle airstream temperatures to 600°F. Consult your Twin City Fan & Blower representative for applications over 600°F. High temperature operating limits and necessary modifications are shown in Table 1.

Table 1. High Temperature Construction Requirements

TEMPERATURE (°F)	WHEEL MATERIAL	BEARING LUBRICATION	OTHER REQUIREMENTS
–20 TO 250°F	Riveted Aluminum on 90-270 BCV Class I. All Others Steel.	Grease	Standard Fan
251 TO 300°F	Steel	Grease	Standard Fan
301 TO 500°F	Steel	High Temperature Grease	Shaft Cooler, Shaft Seal, Expansion & Non-Expansion Bearings; Class II: Insulated Heat Gap
501 TO 600°F CLASS II ONLY	Steel	High Temperature Grease	Shaft Cooler, Shaft Seal, Expansion & Non-Expansion Bearings; High Temperature Aluminum Paint, Insulated Heat Gap

1. When selecting the performances at elevated temperatures and altitudes, refer to the method used in Catalog 300.
2. Excludes DCV & Class L.

Spark Resistant Construction

AMCA TYPE	FAN CONSTRUCTION
A	All Airstream Parts are Aluminum (Wheel, Housing, and Shaft Seal). Limited to 250°F.
B	Aluminum Wheel and Rubbing Plate. Limited to 250°F.
C	To 250°F — 90 To 270 BCV Class I: Aluminum Wheel and Rubbing Plate
	251 To 500°F — 90 To 270 BCV Class I & II: Steel Wheel, Aluminum Inlet Cone and Rubbing Plate
	All Other To 500°F — Aluminum Inlet Cone and Rubbing Plate

NOTES:
1. Bearings shall be placed outside the airstream.
2. The user shall electrically ground all fan parts.
3. The use of the above standard in no way implies a guarantee of safety for any level of spark resistance. "Spark resistant construction also does not protect against ignition of explosive gases caused by catastrophic failure or from any airstream material that may be present in the system."

BCV
High Temperature Construction

High Temp Options/Accessories Include:

- High Temp Grease
- Heat Shield
- Insulated Drive Stand
- Shaft Seal

Fan & Blower
Twin City

Derating Factors For High Temperature

Fan operation at high temperature adversely affects the strength of fan wheels. As a result, the maximum safe speed (RPM) of the fan from Table 3 must be derated by the temperature factor from Table 2.

Example: Maximum safe speed at 400°F for a size 245 BCV Class II steel wheel = 0.95 x 2033 = 1931 RPM (2033 RPM is maximum RPM at 70°F).

Table 2. Derating Factors for High Temperature

TEMPERATURE (°F)	ALUMINUM	STANDARD STEEL	STAINLESS STEEL
70	1.00	1.000	1.00
200	1.00	0.980	0.95
250	1.00	0.970	0.93
300	—	0.960	0.91
400	—	0.950	0.88
500	—	0.900	0.84
600	—	0.860	0.81

Table 3. Maximum RPM at 70°F

FAN SIZE	DCV	BCV			FCV	
		CLASS L	CLASS I	CLASS II	CLASS I	CLASS II
90	2576	2576	3682	—	2200	—
105	2723	2723	3682	—	1637	—
122	2158	2158	3167	4119	1559	1871
135	2039	2039	2874	3738	1415	1698
150	1832	1832	2587	3364	1273	1528
165	1604	1604	2352	3058	1157	1389
182	1508	1508	2118	2729	1046	1256
200	1376	1376	1932	2490	955	1146
222	—	1237	1737	2238	858	1030
245	—	1123	1577	2033	780	935
270	—	950	1397	1803	707	849
300	—	—	1257	1623	637	764
330	—	—	1143	1475	579	694
365	—	—	995	1283	523	628
402	—	—	903	1163	—	—
445	—	—	817	1052	—	—
490	—	—	742	956	—	—
542	—	—	670	863	—	—
600	—	—	606	780	—	—

Table 4. DCV & BCV Bare Fan Weights (lb)

FAN SIZE	DCV	BCV		
		CLASS L	CLASS I	CLASS II
90-105	66	73	—	—
122	72	78	121	133
135	81	87	139	153
150	93	101	162	178
165	106	113	198	218
182	127	136	220	242
200	150	163	287	316
222	—	202	348	383
245	—	237	453	498
270	—	274	507	559
300	—	—	662	728
330	—	—	758	834
365	—	—	940	1034
402	—	—	1275	1403
445	—	—	1525	1678
490	—	—	1910	2101
542	—	—	2280	2508
600	—	—	3300	3630

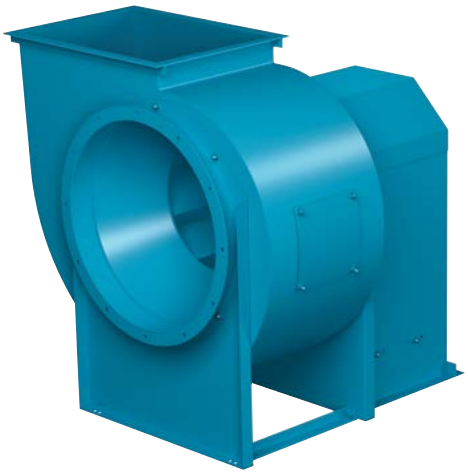

Fan & Blower
Twin City

Backward Inclined

90 DCV

Wheel Dia. = 10.50 inches
Outlet Area = 0.653 ft²
Max. BHP = 0.019 (RPM÷1000)³

RPM	Max BHP	0" SP		0.25" SP		0.5" SP		0.75" SP		1" SP		1.25" SP		1.50" SP		1.75" SP		2" SP		2.25" SP		2.50" SP	
		CFM	BHP	CFM	BHP	CFM	BHP	CFM	BHP	CFM	BHP	CFM	BHP	CFM	BHP	CFM	BHP	CFM	BHP	CFM	BHP	CFM	BHP
1160	0.04	480	0.03	363	0.04	241	0.03																
1750	0.12	724	0.11	650	0.11	566	0.12	494	0.12	408	0.12												

105 DCV

Wheel Dia. = 10.50 inches
Outlet Area = 0.653 ft²
Max. BHP = 0.026 (RPM÷1000)³

RPM	Max BHP	0" SP		0.25" SP		0.5" SP		0.75" SP		1" SP		1.25" SP		1.50" SP		1.75" SP		2" SP		2.25" SP		2.50" SP	
		CFM	BHP	CFM	BHP	CFM	BHP	CFM	BHP	CFM	BHP	CFM	BHP	CFM	BHP	CFM	BHP	CFM	BHP	CFM	BHP	CFM	BHP
1160	0.05	677	0.04	530	0.05	339	0.05																
1750	0.17	1022	0.15	933	0.16	830	0.16	720	0.17	607	0.16	412	0.15										

122 DCV

Wheel Dia. = 12.25 inches
Outlet Area = 0.86 ft²
Max. BHP = 0.064 (RPM÷1000)³

RPM	Max BHP	0" SP		0.25" SP		0.5" SP		0.75" SP		1" SP		1.25" SP		1.50" SP		1.75" SP		2" SP		2.25" SP		2.50" SP	
		CFM	BHP	CFM	BHP	CFM	BHP	CFM	BHP	CFM	BHP	CFM	BHP	CFM	BHP	CFM	BHP	CFM	BHP	CFM	BHP	CFM	BHP
1160	0.12	1264	0.11	1081	0.12	872	0.12	606	0.11														
1750	0.41	1908	0.39	1795	0.40	1669	0.40	1528	0.41	1393	0.41	1250	0.40	1088	0.39	860	0.37						

135 DCV

Wheel Dia. = 13.50 inches
Outlet Area = 1.05 ft²
Max. BHP = 0.104 (RPM÷1000)³

RPM	Max BHP	0" SP		0.25" SP		0.5" SP		0.75" SP		1" SP		1.25" SP		1.50" SP		1.75" SP		2" SP		2.25" SP		2.50" SP	
		CFM	BHP	CFM	BHP	CFM	BHP	CFM	BHP	CFM	BHP	CFM	BHP	CFM	BHP	CFM	BHP	CFM	BHP	CFM	BHP	CFM	BHP
1160	0.19	1692	0.19	1496	0.19	1266	0.19	1022	0.19														
1750	0.66	2553	0.64	2430	0.64	2297	0.65	2146	0.66	1991	0.66	1842	0.66	1684	0.66	1510	0.64	1304	0.62				

150 DCV

Wheel Dia. = 15.00 inches
Outlet Area = 1.29 ft²
Fan Efficiency Grade: FEG75
Max. BHP = 0.176 (RPM÷1000)³

RPM	Max BHP	0" SP		0.25" SP		0.5" SP		0.75" SP		1" SP		1.25" SP		1.50" SP		1.75" SP		2" SP		2.25" SP		2.50" SP	
		CFM	BHP	CFM	BHP	CFM	BHP	CFM	BHP	CFM	BHP	CFM	BHP	CFM	BHP	CFM	BHP	CFM	BHP	CFM	BHP	CFM	BHP
1160	0.33	2321	0.31	2108	0.32	1853	0.33	1600	0.33	1309	0.31												
1750	1.12	3502	1.08	3366	1.09	3222	1.10	3065	1.11	2891	1.12	2722	1.12	2556	1.12	2383	1.12	2201	1.10	1998	1.08	1755	1.05

165 DCV

Wheel Dia. = 16.50 inches
Outlet Area = 1.57 ft²
Fan Efficiency Grade: FEG75
Max. BHP = 0.284 (RPM÷1000)³

RPM	Max BHP	0" SP		0.25" SP		0.5" SP		0.75" SP		1" SP		1.25" SP		1.50" SP		1.75" SP		2" SP		2.25" SP		2.50" SP	
		CFM	BHP	CFM	BHP	CFM	BHP	CFM	BHP	CFM	BHP	CFM	BHP	CFM	BHP	CFM	BHP	CFM	BHP	CFM	BHP	CFM	BHP
1160	0.53	3090	0.51	2858	0.52	2588	0.52	2308	0.53	2020	0.52	1683	0.50										
1604	1.39	4273	1.34	4110	1.35	3937	1.36	3749	1.38	3541	1.39	3337	1.39	3139	1.39	2933	1.39	2715	1.37	2474	1.35	2196	1.31

182 DCV

Wheel Dia. = 18.25 inches
Outlet Area = 1.92 ft²
Fan Efficiency Grade: FEG80
Max. BHP = 0.466 (RPM÷1000)³

RPM	Max BHP	0" SP		0.25" SP		0.5" SP		0.75" SP		1" SP		1.25" SP		1.50" SP		1.75" SP		2" SP		2.25" SP		2.50" SP	
		CFM	BHP	CFM	BHP	CFM	BHP	CFM	BHP	CFM	BHP	CFM	BHP	CFM	BHP	CFM	BHP	CFM	BHP	CFM	BHP	CFM	BHP
1160	0.86	4153	0.76	3942	0.80	3715	0.84	3468	0.86	3181	0.86	2822	0.84	2304	0.76								
1508	1.90	5399	1.66	5239	1.73	5073	1.78	4898	1.83	4715	1.87	4522	1.89	4312	1.90	4076	1.89	3805	1.86	3484	1.80	3068	1.70

200 DCV

Wheel Dia. = 20.00 inches
Outlet Area = 2.30 ft²
Fan Efficiency Grade: FEG80
Max. BHP = 0.737 (RPM÷1000)³

RPM	Max BHP	0" SP		0.25" SP		0.5" SP		0.75" SP		1" SP		1.25" SP		1.50" SP		1.75" SP		2" SP		2.25" SP		2.50" SP	
		CFM	BHP	CFM	BHP	CFM	BHP	CFM	BHP	CFM	BHP	CFM	BHP	CFM	BHP	CFM	BHP	CFM	BHP	CFM	BHP	CFM	BHP
1160	1.37	5466	1.20	5236	1.26	4992	1.31	4731	1.35	4447	1.37	4117	1.36	3717	1.32	3180	1.24						
1376	2.29	6484	2.00	6292	2.07	6092	2.14	5882	2.20	5662	2.24	5431	2.27	5178	2.29	4894	2.27	4570	2.23	4185	2.16	3685	2.04

Performance is for installation Type B & D: Free or ducted inlet, ducted outlet.
Power rating (bhp) does not include transmission losses.
Performance ratings do not include the effects of appurtenances (accessories).

Backward Inclined

90 BCV/BCVR

Wheel Dia. = 10.50 inches
Outlet Area = 0.653 ft²

Fan Efficiency Grade: FEG67
Max. BHP = 0.023 (RPM÷1000)³

CFM	OV	0.125" SP		0.25" SP		0.5" SP		0.75" SP		1" SP		1.5" SP		2" SP		3" SP		4" SP	
		RPM	BHP	RPM	BHP	RPM	BHP	RPM	BHP	RPM	BHP	RPM	BHP	RPM	BHP	RPM	BHP	RPM	BHP
261	400	829	0.01	970	0.02	1190	0.04												
327	500	964	0.02	1088	0.03	1305	0.05	1470	0.07	1626	0.09								
392	600	1095	0.03	1220	0.04	1409	0.06	1584	0.09	1722	0.12								
457	700	1232	0.04	1352	0.05	1527	0.08	1688	0.11	1836	0.14	2069	0.20						
522	800	1374	0.05	1483	0.07	1659	0.10	1799	0.13	1940	0.17	2184	0.24	2380	0.30				
588	900	1521	0.07	1618	0.09	1794	0.13	1927	0.16	2051	0.20	2295	0.28	2495	0.35	2840	0.50		
653	1000	1668	0.10	1756	0.11	1926	0.16	2059	0.20	2173	0.23	2399	0.32	2608	0.41	2938	0.57	3251	0.75
718	1100	1817	0.12	1898	0.14	2056	0.19	2193	0.23	2304	0.28	2508	0.36	2712	0.46	3052	0.65	3334	0.82
784	1200	1970	0.16	2044	0.18	2190	0.22	2327	0.28	2440	0.32	2631	0.42	2819	0.52	3168	0.73	3444	0.92
849	1300	2121	0.19	2190	0.22	2325	0.27	2457	0.32	2573	0.38	2760	0.48	2932	0.58	3274	0.81	3560	1.03
914	1400	2274	0.24	2338	0.26	2463	0.31	2588	0.37	2705	0.43	2893	0.54	3055	0.65	3377	0.89	3673	1.14
980	1500	2429	0.29	2489	0.32	2606	0.37	2723	0.43	2837	0.49	3029	0.62	3186	0.73	3485	0.98		
1045	1600	2582	0.35	2639	0.38	2749	0.43	2858	0.49	2968	0.56	3162	0.70	3319	0.82	3600	1.07		
1110	1700	2736	0.41	2789	0.44	2894	0.50	2996	0.57	3100	0.64	3294	0.78	3453	0.92				
1175	1800	2890	0.49	2940	0.52	3040	0.58	3137	0.65	3234	0.72	3424	0.87	3587	1.02				
1241	1900	3046	0.57	3094	0.60	3189	0.67	3282	0.74	3373	0.81	3556	0.97						

MAXIMUM RPM: Class L — 2576 Class I — 3682

Selections above 4000 RPM not recommended. Consult factory.

105 BCV/BCVR

Wheel Dia. = 10.50 inches
Outlet Area = 0.653 ft²

Fan Efficiency Grade: FEG75
Max. BHP = 0.031 (RPM÷1000)³

CFM	OV	0.25" SP		0.5" SP		0.75" SP		1" SP		1.5" SP		2" SP		3" SP		4" SP		5" SP	
		RPM	BHP	RPM	BHP	RPM	BHP	RPM	BHP	RPM	BHP	RPM	BHP	RPM	BHP	RPM	BHP	RPM	BHP
327	500	901	0.02	1151	0.04	1360	0.07												
392	600	980	0.03	1203	0.05	1403	0.08	1579	0.11										
457	700	1063	0.04	1267	0.06	1453	0.09	1623	0.12	1920	0.19								
522	800	1149	0.05	1346	0.08	1512	0.10	1674	0.14	1961	0.21	2214	0.29						
588	900	1239	0.06	1429	0.09	1585	0.12	1732	0.15	2009	0.24	2255	0.32						
653	1000	1330	0.07	1512	0.11	1665	0.14	1800	0.18	2061	0.26	2300	0.35	2720	0.55				
784	1200	1522	0.11	1686	0.14	1831	0.19	1961	0.23	2187	0.32	2405	0.41	2806	0.63	3158	0.87	3477	1.12
914	1400	1721	0.15	1868	0.20	2003	0.24	2126	0.30	2343	0.40	2535	0.49	2907	0.72	3246	0.98	3555	1.25
1045	1600	1927	0.21	2058	0.26	2183	0.31	2298	0.37	2509	0.49	2693	0.60	3025	0.83	3348	1.10	3647	1.40
1175	1800	2135	0.29	2253	0.34	2367	0.40	2476	0.45	2676	0.59	2857	0.72	3169	0.97	3462	1.24		
1306	2000	2347	0.38	2455	0.44	2559	0.50	2661	0.57	2850	0.70	3024	0.85	3331	1.14	3600	1.41		
1437	2200	2562	0.49	2660	0.56	2756	0.63	2850	0.70	3030	0.83	3196	0.99	3496	1.32				
1567	2400	2776	0.62	2867	0.70	2956	0.77	3043	0.85	3213	1.00	3371	1.15	3662	1.51				
1698	2600	2994	0.77	3078	0.86	3160	0.94	3241	1.02	3400	1.18	3553	1.34						
1828	2800	3210	0.95	3289	1.04	3366	1.13	3442	1.22	3591	1.39								
1959	3000	3429	1.15	3503	1.25	3575	1.35	3647	1.44										

MAXIMUM RPM: Class L — 2723 Class I — 3682

122 BCV/BCVR/BCVSH

Wheel Dia. = 12.25 inches
Outlet Area = 0.86 ft²

Fan Efficiency Grade: FEG80
Max. BHP = 0.076 (RPM÷1000)³

CFM	OV	0.25" SP		0.5" SP		1" SP		1.5" SP		2" SP		3" SP		4" SP		5" SP		6" SP		7" SP		8" SP	
		RPM	BHP	RPM	BHP	RPM	BHP	RPM	BHP	RPM	BHP	RPM	BHP	RPM	BHP	RPM	BHP	RPM	BHP	RPM	BHP	RPM	BHP
688	800	869	0.05	1044	0.08	1335	0.17																
860	1000	994	0.07	1152	0.12	1413	0.21	1642	0.31														
1032	1200	1123	0.11	1271	0.16	1512	0.26	1720	0.37	1911	0.49												
1204	1400	1256	0.15	1397	0.21	1622	0.32	1816	0.45	1992	0.58	2317	0.87										
1376	1600	1396	0.20	1525	0.27	1738	0.40	1922	0.54	2088	0.68	2390	0.98	2671	1.33								
1548	1800	1539	0.27	1655	0.34	1861	0.49	2035	0.64	2193	0.79	2480	1.12	2741	1.48	2989	1.87						
1720	2000	1685	0.36	1790	0.43	1988	0.60	2154	0.76	2305	0.93	2578	1.27	2827	1.65	3059	2.05	**3283**	**2.48**	**3500**	**2.94**		
1892	2200	1834	0.46	1929	0.54	2116	0.72	2277	0.90	2421	1.08	2683	1.45	2922	1.84	3144	2.26	**3355**	**2.71**	**3559**	**3.18**	**3758**	**3.67**
2236	2600	2135	0.72	2216	0.81	2377	1.01	2531	1.23	2667	1.44	2909	1.87	3131	2.31	**3337**	**2.77**	**3533**	**3.25**	**3719**	**3.75**	**3898**	**4.27**
2580	3000	2439	1.07	2511	1.17	2650	1.40	2789	1.64	2921	1.89	3151	2.38	**3358**	**2.88**	**3552**	**3.39**	**3735**	**3.90**	**3910**	**4.44**	**4079**	**5.00**
2924	3400	2746	1.52	2810	1.64	2934	1.89	3057	2.15	**3179**	**2.43**	**3402**	**2.99**	**3599**	**3.55**	**3781**	**4.11**	**3955**	**4.69**				
3268	3800	3055	2.09	3112	2.22	**3224**	**2.49**	**3334**	**2.78**	**3444**	**3.08**	**3658**	**3.71**	**3849**	**4.34**	**4023**	**4.96**						

MAXIMUM RPM: Class L — 3167 Class I — 4119

Selections above 4000 RPM not recommended. Consult factory.

Performance is for installation Type B & D: Free or ducted inlet, ducted outlet.
Power rating (bhp) does not include transmission losses.
Performance ratings do not include the effects of appurtenances (accessories).

Class L fans are shown in shaded area.
Class I fans are shown in regular face type.
Class II fans are shown in **bold** face type.
Underlined figures indicate maximum static efficiencies.

Backward Inclined

135 BCV/BCVR/BCVSH

Wheel Dia. = 13.50 inches
Outlet Area = 1.05 ft²

Fan Efficiency Grade: FEG80
Max. BHP = 0.124 (RPM÷1000)³

CFM	OV	0.25" SP		0.5" SP		1" SP		1.5" SP		2" SP		3" SP		4" SP		5" SP		6" SP		7" SP		8" SP	
		RPM	BHP	RPM	BHP	RPM	BHP	RPM	BHP	RPM	BHP	RPM	BHP	RPM	BHP	RPM	BHP	RPM	BHP	RPM	BHP	RPM	BHP
840	800	791	0.06	949	0.10	1213	0.20																
1050	1000	905	0.09	1048	0.14	1285	0.25	1491	0.38														
1260	1200	1022	0.13	1157	0.19	1375	0.32	1563	0.45	1736	0.60												
1470	1400	1144	0.18	1272	0.25	1475	0.40	1651	0.54	1811	0.70	2105	1.06										
1680	1600	1272	0.25	1388	0.33	1582	0.49	1748	0.65	1899	0.83	2172	1.20	2426	1.62								
1890	1800	1403	0.33	1508	0.42	1695	0.60	1851	0.78	1995	0.97	2254	1.37	2490	1.80	2715	2.28						
2100	2000	1537	0.44	1631	0.53	1810	0.73	1960	0.93	2097	1.14	2344	1.56	2570	2.02	2780	2.50	**2982**	**3.03**	**3178**	**3.58**		
2310	2200	1672	0.56	1758	0.66	1927	0.88	2073	1.10	2203	1.32	2441	1.78	2657	2.26	2858	2.77	**3048**	**3.30**	**3233**	**3.87**	**3413**	**4.48**
2730	2600	1946	0.88	2020	1.00	2165	1.24	2304	1.51	2428	1.77	2647	2.29	2848	2.83	**3035**	**3.39**	**3212**	**3.97**	**3380**	**4.57**	**3542**	**5.21**
3150	3000	2224	1.32	2289	1.45	2415	1.72	2541	2.02	2660	2.32	2868	2.92	**3056**	**3.53**	**3231**	**4.14**	**3397**	**4.78**	**3555**	**5.42**	**3708**	**6.10**
3570	3400	2505	1.88	2562	2.02	2674	2.32	2785	2.64	**2895**	**2.98**	**3098**	**3.68**	**3276**	**4.35**	**3441**	**5.04**	**3598**	**5.74**				
3990	3800	2787	2.58	2838	2.74	**2939**	**3.07**	**3038**	**3.41**	**3138**	**3.78**	**3331**	**4.56**	**3504**	**5.32**	**3661**	**6.08**						

MAXIMUM RPM: Class L — 2039 Class I — 2874 Class II — 3738

150 BCV/BCVR/BCVSH

Wheel Dia. = 15.00 inches
Outlet Area = 1.29 ft²

Fan Efficiency Grade: FEG75
Max. BHP = 0.211 (RPM÷1000)³

CFM	OV	0.25" SP		0.5" SP		1" SP		1.5" SP		2" SP		3" SP		4" SP		5" SP		6" SP		7" SP		8" SP	
		RPM	BHP	RPM	BHP	RPM	BHP	RPM	BHP	RPM	BHP	RPM	BHP	RPM	BHP	RPM	BHP	RPM	BHP	RPM	BHP	RPM	BHP
1032	800	710	0.08	853	0.13	1091	1.00																
1290	1000	812	0.11	941	0.17	1154	0.31	1341	0.47														
1548	1200	917	0.16	1038	0.23	1235	0.39	1405	0.56	1561	0.74												
1806	1400	1026	0.22	1141	0.31	1325	0.49	1483	0.67	1627	0.86	1893	1.31										
2064	1600	1140	0.31	1245	0.40	1420	0.60	1570	0.80	1706	1.01	1952	1.48	2181	1.99								
2322	1800	1257	0.41	1352	0.51	1521	0.74	1662	0.96	1791	1.19	2026	1.68	2238	2.21	2441	2.80						
2580	2000	1377	0.53	1462	0.65	1624	0.90	1759	1.14	1882	1.39	2106	1.91	2309	2.47	2499	3.08	**2682**	**3.72**	**2858**	**4.41**		
2838	2200	1498	0.69	1576	0.81	1728	1.08	1860	1.35	1978	1.62	2192	2.18	2387	2.77	2568	3.40	**2740**	**4.06**	**2907**	**4.76**	**3070**	**5.51**
3354	2600	1744	1.08	1811	1.22	1942	1.52	2067	1.85	2178	2.17	2376	2.81	2557	3.47	**2726**	**4.15**	**2886**	**4.87**	**3037**	**5.62**	**3183**	**6.39**
3870	3000	1993	1.60	2051	1.76	2165	2.10	2279	2.46	2386	2.84	2574	3.58	**2743**	**4.32**	**2902**	**5.08**	**3051**	**5.86**	**3194**	**6.66**	**3331**	**7.49**
4386	3400	2244	2.29	2295	2.46	2397	2.83	2497	3.22	**2597**	**3.65**	**2779**	**4.49**	**2940**	**5.33**	**3089**	**6.17**	**3231**	**7.03**				
4902	3800	2496	3.14	2543	3.34	**2634**	**3.74**	**2724**	**4.17**	**2814**	**4.62**	**2988**	**5.57**	**3144**	**6.51**	**3286**	**7.44**						

MAXIMUM RPM: Class L — 1832 Class I — 2587 Class II — 3364

165 BCV/BCVR/BCVSH

Wheel Dia. = 16.50 inches
Outlet Area = 1.57 ft²

Fan Efficiency Grade: FEG75
Max. BHP = 0.339 (RPM÷1000)³

CFM	OV	0.25" SP		0.5" SP		1" SP		1.5" SP		2" SP		3" SP		4" SP		5" SP		6" SP		7" SP		8" SP	
		RPM	BHP	RPM	BHP	RPM	BHP	RPM	BHP	RPM	BHP	RPM	BHP	RPM	BHP	RPM	BHP	RPM	BHP	RPM	BHP	RPM	BHP
1256	800	648	0.09	777	0.15	992	0.30																
1570	1000	741	0.14	858	0.21	1051	0.38	1220	0.57														
1884	1200	837	0.20	947	0.29	1125	0.47	1279	0.68	1421	0.90												
2198	1400	937	0.27	1041	0.38	1208	0.59	1351	0.81	1482	1.05	1722	1.59										
2512	1600	1041	0.37	1137	0.49	1295	0.73	1431	0.98	1554	1.24	1778	1.80	1985	2.42								
2826	1800	1149	0.50	1234	0.63	1387	0.90	1516	1.17	1633	1.45	1845	2.05	2038	2.70	2222	3.40						
3140	2000	1258	0.66	1335	0.79	1482	1.10	1604	1.39	1716	1.70	1919	2.33	2103	3.01	2275	3.74	**2441**	**4.53**	**2601**	**5.36**		
3454	2200	1369	0.84	1440	0.99	1577	1.32	1697	1.65	1803	1.98	1998	2.66	2174	3.37	2339	4.14	**2495**	**4.94**	**2646**	**5.80**	**2793**	**6.69**
4082	2600	1594	1.33	1654	1.49	1773	1.86	1887	2.26	1987	2.65	2167	3.43	2331	4.23	**2484**	**5.06**	**2629**	**5.93**	**2766**	**6.84**	**2899**	**7.79**
4710	3000	1822	1.97	1874	2.16	1977	2.57	2080	3.01	2177	3.47	2348	4.37	**2501**	**5.28**	**2645**	**6.20**	**2780**	**7.14**	**2910**	**8.12**	**3035**	**9.13**
5338	3400	2051	2.81	2098	3.03	2190	3.48	2280	3.95	**2370**	**4.46**	**2536**	**5.50**	**2682**	**6.52**	**2817**	**7.54**	**2945**	**8.5**				
5966	3800	2282	3.87	2324	4.11	**2407**	**4.60**	**2488**	**5.11**	**2569**	**5.66**	**2727**	**6.82**	**2869**	**7.97**	**2997**	**9.09**						

MAXIMUM RPM: Class L — 1604 Class I — 2352 Class II — 3058

182 BCV/BCVR/BCVSH

Wheel Dia. = 18.25 inches
Outlet Area = 1.92 ft²

Fan Efficiency Grade: FEG80
Max. BHP = 0.552 (RPM÷1000)³

CFM	OV	0.25" SP		0.5" SP		1" SP		1.5" SP		2" SP		3" SP		4" SP		5" SP		6" SP		7" SP		8" SP	
		RPM	BHP	RPM	BHP	RPM	BHP	RPM	BHP	RPM	BHP	RPM	BHP	RPM	BHP	RPM	BHP	RPM	BHP	RPM	BHP	RPM	BHP
1536	800	569	0.10	695	0.17																		
1920	1000	651	0.15	757	0.24	951	0.42	1126	0.64														
2304	1200	741	0.22	831	0.32	1002	0.53	1160	0.76	1306	1.02												
2688	1400	835	0.31	914	0.42	1066	0.66	1208	0.91	1342	1.19												
3072	1600	933	0.43	1003	0.55	1138	0.81	1267	1.09	1391	1.39	1621	2.03										
3456	1800	1032	0.57	1096	0.71	1217	1.00	1335	1.30	1449	1.62	1663	2.30	1864	3.06								
3840	2000	1133	0.75	1191	0.91	1302	1.22	1409	1.55	1514	1.88	1714	2.61	1903	3.40	2081	4.24	**2252**	**5.15**				
4224	2200	1235	0.96	1288	1.13	1391	1.48	1489	1.83	1586	2.20	1773	2.96	1950	3.78	**2120**	**4.67**	**2282**	**5.60**	**2437**	**6.58**		
4992	2600	1441	1.51	1487	1.71	1576	2.12	1661	2.53	1744	2.94	1908	3.81	2066	4.71	**2218**	**5.66**	**2365**	**6.67**	**2507**	**7.72**	**2645**	**8.81**
5760	3000	1650	2.25	1689	2.47	1768	2.94	1843	3.41	1917	3.88	2061	4.86	**2202**	**5.85**	**2340**	**6.89**	**2473**	**7.97**	**2604**	**9.09**		
6528	3400	1859	3.19	1895	3.46	1964	3.98	2032	4.50	2099	5.04	**2227**	**6.12**	**2354**	**7.23**	**2479**	**8.36**	**2601**	**9.53**	**2720**	**10.73**		
7296	3800	2070	4.39	2102	4.68	**2165**	**5.26**	**2226**	**5.85**	**2287**	**6.45**	**2404**	**7.64**	**2518**	**8.85**	**2631**	**10.09**						

MAXIMUM RPM: Class L — 1508 Class I — 2118 Class II — 2729

Performance is for installation Type B & D: Free or ducted inlet, ducted outlet.
Power rating (bhp) does not include transmission losses.
Performance ratings do not include the effects of appurtenances (accessories).

Class L fans are shown in shaded area.
Class I fans are shown in regular face type.
Class II fans are shown in **bold** face type.
Underlined figures indicate maximum static efficiencies.

Backward Inclined

200 BCV/BCVR/BCVSH

Wheel Dia. = 20.00 inches
Outlet Area = 2.30 ft²

Fan Efficiency Grade: FEG80
Max. BHP = 0.872 (RPM÷1000)³

CFM	OV	0.25" SP		0.5" SP		1" SP		1.5" SP		2" SP		3" SP		4" SP		5" SP		6" SP		7" SP		8" SP	
		RPM	BHP	RPM	BHP	RPM	BHP	RPM	BHP	RPM	BHP	RPM	BHP	RPM	BHP	RPM	BHP	RPM	BHP	RPM	BHP	RPM	BHP
1840	800	519	0.12	634	0.21																		
2300	1000	593	0.18	690	0.28	868	0.51	1027	0.77														
2760	1200	675	0.27	758	0.38	914	0.63	1058	0.91	1191	1.22												
3220	1400	761	0.37	833	0.51	971	0.78	1102	1.09	1224	1.42												
3680	1600	849	0.51	914	0.66	1037	0.97	1155	1.30	1268	1.66	1479	2.44										
4140	1800	940	0.68	998	0.85	1109	1.20	1217	1.56	1321	1.94	1517	2.76	1700	3.66								
4600	2000	1031	0.89	1085	1.08	1186	1.46	1284	1.85	1380	2.25	1563	3.12	1735	4.07	1899	5.09	**2054**	**6.17**				
5060	2200	1124	1.15	1173	1.35	1267	1.77	1357	2.19	1445	2.62	1616	3.54	1778	4.53	**1933**	**5.59**	**2081**	**6.71**	**2223**	**7.89**		
5980	2600	1312	1.80	1354	2.04	1435	2.53	1513	3.02	1589	3.52	1739	4.55	1883	5.64	**2022**	**6.78**	**2157**	**7.99**	**2287**	**9.25**	**2413**	**10.56**
6900	3000	1502	2.68	1538	2.95	1610	3.51	1679	4.07	1746	4.64	1878	5.81	**2007**	**7.00**	**2133**	**8.25**	**2255**	**9.54**	**2374**	**10.88**	**2490**	**12.28**
7820	3400	1692	3.81	1725	4.12	1789	4.75	1851	5.38	1911	6.02	**2029**	**7.31**	**2145**	**8.65**	**2259**	**10.00**	**2371**	**11.40**	**2480**	**12.84**		
8740	3800	1884	5.23	1913	5.58	**1971**	**6.28**	**2027**	**6.98**	**2082**	**7.69**	**2189**	**9.12**	**2294**	**10.58**	**2398**	**12.08**						

MAXIMUM RPM: Class L — 1376 Class I — 1932 Class II — 2490

222 BCV/BCVR/BCVSH

Wheel Dia. = 22.25 inches
Outlet Area = 2.85 ft²

Fan Efficiency Grade: FEG80
Max. BHP = 1.49 (RPM÷1000)³

CFM	OV	0.25" SP		0.5" SP		1" SP		1.5" SP		2" SP		3" SP		4" SP		5" SP		6" SP		7" SP		8" SP	
		RPM	BHP	RPM	BHP	RPM	BHP	RPM	BHP	RPM	BHP	RPM	BHP	RPM	BHP	RPM	BHP	RPM	BHP	RPM	BHP	RPM	BHP
2280	800	466	0.15	570	0.26																		
2850	1000	533	0.23	621	0.35	780	0.63	923	0.95														
3420	1200	607	0.33	681	0.47	822	0.78	951	1.13	1071	1.52												
3990	1400	685	0.46	749	0.63	874	0.97	991	1.35	1101	1.76												
4560	1600	764	0.63	822	0.82	933	1.21	1039	1.62	1140	2.05	1330	3.02										
5130	1800	846	0.85	898	1.06	998	1.49	1094	1.93	1188	2.40	1364	3.42	1528	4.53								
5700	2000	928	1.11	976	1.34	1067	1.81	1155	2.29	1241	2.79	1405	3.87	1560	5.04	1707	6.30	**1847**	**7.64**				
6270	2200	1012	1.43	1055	1.68	1139	2.19	1220	2.71	1300	3.26	1453	4.39	1599	5.61	**1738**	**6.92**	**1871**	**8.31**	**1999**	**9.78**		
7410	2600	1181	2.24	1218	2.53	1291	3.13	1361	3.74	1429	4.36	1564	5.64	1693	6.98	**1818**	**8.40**	**1939**	**9.89**	**2056**	**11.46**	**2169**	**13.08**
8550	3000	1351	3.32	1384	3.67	1448	4.35	1510	5.05	1571	5.76	1689	7.20	**1805**	**8.68**	**1918**	**10.22**	**2028**	**11.83**	**2135**	**13.50**		
9690	3400	1523	4.73	1552	5.11	1609	5.89	1665	6.68	1720	7.47	**1825**	**9.07**	**1929**	**10.72**	**2032**	**12.40**	**2132**	**14.13**	**2230**	**15.92**		
10830	3800	1696	6.50	1722	6.93	**1773**	**7.79**	**1824**	**8.67**	**1874**	**9.55**	**1970**	**11.33**	**2064**	**13.14**	**2157**	**14.98**						

MAXIMUM RPM: Class L — 1237 Class I — 1737 Class II — 2238

245 BCV/BCVR/BCVSH

Wheel Dia. = 24.50 inches
Outlet Area = 3.45 ft²

Fan Efficiency Grade: FEG80
Max. BHP = 2.40 (RPM÷1000)³

CFM	OV	0.25" SP		0.5" SP		1" SP		1.5" SP		2" SP		3" SP		4" SP		5" SP		6" SP		7" SP		8" SP	
		RPM	BHP	RPM	BHP	RPM	BHP	RPM	BHP	RPM	BHP	RPM	BHP	RPM	BHP	RPM	BHP	RPM	BHP	RPM	BHP	RPM	BHP
2760	800	423	0.18	517	0.31																		
3450	1000	484	0.27	563	0.42	708	0.76	838	1.15														
4140	1200	551	0.40	618	0.57	746	0.95	863	1.37	972	1.84												
4830	1400	621	0.56	680	0.76	793	1.18	899	1.63	999	2.13												
5520	1600	693	0.77	746	0.99	846	1.46	943	1.96	1035	2.49	1207	3.65										
6210	1800	767	1.03	815	1.28	905	1.79	993	2.33	1078	2.90	1238	4.13	1388	5.49								
6900	2000	842	1.34	885	1.62	968	2.19	1048	2.77	1126	3.38	1276	4.69	1416	6.10	1550	7.63	**1677**	**9.25**				
7590	2200	917	1.72	957	2.03	1034	2.65	1107	3.28	1180	3.94	1319	5.32	1452	6.80	**1578**	**8.38**	**1699**	**10.07**	**1815**	**11.84**		
8970	2600	1071	2.71	1105	3.06	1171	3.79	1235	4.53	1297	5.28	1419	6.82	1537	8.46	**1651**	**10.18**	**1760**	**11.97**	**1867**	**13.88**	**1969**	**15.83**
10350	3000	1225	4.01	1255	4.42	1313	5.25	1370	6.10	1425	6.96	1532	8.70	**1638**	**10.49**	**1741**	**12.37**	**1840**	**14.30**	**1938**	**16.33**	**2032**	**18.41**
11730	3400	1381	5.71	1408	6.18	1460	7.12	1510	8.06	1560	9.03	**1656**	**10.97**	**1751**	**12.97**	**1844**	**15.00**	**1935**	**17.09**	**2024**	**19.26**		
13110	3800	1538	7.85	1561	8.36	**1608**	**9.41**	**1654**	**10.46**	**1699**	**11.53**	**1787**	**13.69**	**1872**	**15.87**	**1957**	**18.11**						

MAXIMUM RPM: Class L — 1123 Class I — 1577 Class II — 2033

270 BCV/BCVR/BCVSH

Wheel Dia. = 27.00 inches
Outlet Area = 4.19 ft²

Fan Efficiency Grade: FEG85
Max. BHP = 4.05 (RPM÷1000)³

CFM	OV	0.25" SP		0.5" SP		1" SP		1.5" SP		2" SP		3" SP		4" SP		5" SP		6" SP		7" SP		8" SP	
		RPM	BHP	RPM	BHP	RPM	BHP	RPM	BHP	RPM	BHP	RPM	BHP	RPM	BHP	RPM	BHP	RPM	BHP	RPM	BHP	RPM	BHP
3352	800	380	0.22	457	0.36	592	0.72																
4190	1000	437	0.33	504	0.50	621	0.89	726	1.33														
5028	1200	498	0.48	557	0.69	661	1.11	755	1.59	843	2.12												
5866	1400	561	0.68	614	0.91	709	1.40	795	1.92	875	2.48	1026	3.75										
6704	1600	627	0.93	674	1.20	761	1.75	840	2.32	914	2.91	1051	4.21	1184	5.74								
7542	1800	693	1.24	736	1.54	816	2.15	890	2.78	959	3.43	1088	4.82	1206	6.32	1324	8.05	**1449**	**10.16**				
8380	2000	761	1.63	800	1.96	874	2.63	943	3.33	1007	4.02	1128	5.49	1241	7.08	1346	8.77	**1452**	**10.68**	**1564**	**12.93**		
9218	2200	829	2.08	865	2.45	934	3.19	998	3.94	1059	4.70	1174	6.30	1280	7.95	1381	9.72	**1476**	**11.58**	**1572**	**13.64**	**1672**	**15.99**
10894	2600	968	3.28	999	3.71	1058	4.57	1115	5.45	1169	6.33	1272	8.14	1369	10.02	**1461**	**11.95**	**1549**	**13.97**	**1633**	**16.07**	**1714**	**18.25**
12570	3000	1108	4.87	1135	5.36	1187	6.36	1238	7.37	1287	8.38	1380	10.42	**1469**	**12.53**	**1553**	**14.68**	**1634**	**16.88**	**1712**	**19.14**	**1788**	**21.49**
14246	3400	1248	6.91	1272	7.47	1320	8.62	1365	9.75	**1409**	**10.88**	**1495**	**13.19**	**1576**	**15.53**	**1654**	**17.90**	**1729**	**20.32**	**1802**	**22.81**		
15922	3800	1390	9.51	**1412**	**10.14**	**1454**	**11.39**	**1495**	**12.65**	**1536**	**13.94**	**1614**	**16.48**	**1689**	**19.05**	**1762**	**21.70**						

MAXIMUM RPM: Class L — 950 Class I — 1397 Class II — 1803

Performance is for installation Type B & D: Free or ducted inlet, ducted outlet.
Power rating (bhp) does not include transmission losses.
Performance ratings do not include the effects of appurtenances (accessories).

Class L fans are shown in shaded area.
Class I fans are shown in regular face type.
Class II fans are shown in **bold** face type.
Underlined figures indicate maximum static efficiencies.

Backward Inclined

300 BCV/BCVR/BCVSH

Wheel Dia. = 30.00 inches
Outlet Area = 5.17 ft²

Fan Efficiency Grade: FEG85
Max. BHP = 6.86 (RPM÷1000)³

CFM	OV	0.25" SP		0.5" SP		1" SP		1.5" SP		2" SP		3" SP		4" SP		5" SP		6" SP		7" SP		8" SP	
		RPM	BHP	RPM	BHP	RPM	BHP	RPM	BHP	RPM	BHP	RPM	BHP	RPM	BHP	RPM	BHP	RPM	BHP	RPM	BHP	RPM	BHP
4136	800	342	0.27	411	0.45	533	0.89																
5170	1000	393	0.41	453	0.62	558	1.09	653	1.64														
6204	1200	448	0.59	501	0.84	595	1.38	680	1.96	758	2.61												
7238	1400	505	0.84	552	1.12	638	1.73	715	2.36	787	3.05	923	4.63										
8272	1600	564	1.15	606	1.47	684	2.15	756	2.86	823	3.60	946	5.20	1065	7.08								
9306	1800	624	1.53	662	1.90	734	2.65	801	3.44	863	4.24	979	5.94	1085	7.79	1192	9.95	**1304**	**12.53**				
10340	2000	685	2.01	720	2.42	786	3.24	848	4.09	906	4.96	1015	6.78	1117	8.75	1212	10.84	**1307**	**13.18**	**1408**	**15.98**		
11374	2200	746	2.57	778	3.02	840	3.93	898	4.86	953	5.80	1056	7.76	1152	9.81	1242	11.98	**1329**	**14.31**	**1415**	**16.84**	**1505**	**19.75**
13442	2600	871	4.04	898	4.56	952	5.64	1003	6.71	1052	7.81	1145	10.05	1232	12.36	**1314**	**14.73**	**1394**	**17.24**	**1470**	**19.85**	**1543**	**22.55**
15510	3000	996	5.99	1021	6.61	1068	7.84	1114	9.09	1158	10.33	1242	12.87	**1321**	**15.43**	**1397**	**18.09**	**1470**	**20.82**	**1540**	**23.59**	**1609**	**26.51**
17578	3400	1123	8.53	1145	9.23	1187	10.62	1228	12.02	**1268**	**13.43**	**1345**	**16.27**	**1418**	**19.15**	**1488**	**22.08**	**1556**	**25.08**	**1621**	**28.12**		
19646	3800	1250	11.71	**1270**	**12.50**	**1308**	**14.05**	**1345**	**15.60**	**1382**	**17.20**	**1452**	**20.32**	**1520**	**23.52**	**1585**	**26.75**						

MAXIMUM RPM: Class I — 1257 Class II — 1623

330 BCV/BCVR/BCVSH

Wheel Dia. = 33.00 inches
Outlet Area = 6.26 ft²

Fan Efficiency Grade: FEG80
Max. BHP = 11.05 (RPM÷1000)³

CFM	OV	0.25" SP		0.5" SP		1" SP		1.5" SP		2" SP		3" SP		4" SP		5" SP		6" SP		7" SP		8" SP	
		RPM	BHP	RPM	BHP	RPM	BHP	RPM	BHP	RPM	BHP	RPM	BHP	RPM	BHP	RPM	BHP	RPM	BHP	RPM	BHP	RPM	BHP
5008	800	311	0.33	374	0.54	484	1.07																
6260	1000	357	0.49	412	0.75	508	1.33	594	1.99														
7512	1200	407	0.72	455	1.02	541	1.67	618	2.37	690	3.17												
8764	1400	459	1.01	502	1.36	580	2.09	650	2.86	716	3.70	839	5.60										
10016	1600	513	1.39	551	1.78	622	2.60	688	3.47	748	4.35	860	6.30	968	8.56								
11268	1800	567	1.85	602	2.30	668	3.22	728	4.16	785	5.14	890	7.19	987	9.45	1083	12.02	**1186**	**15.19**				
12520	2000	623	2.43	655	2.93	715	3.93	771	4.96	824	6.01	923	8.21	1015	10.57	1102	13.13	**1188**	**15.95**	**1280**	**19.34**		
13772	2200	679	3.12	708	3.66	764	4.77	817	5.89	867	7.04	960	9.39	1047	11.86	1130	14.53	**1208**	**17.31**	**1286**	**20.37**	**1368**	**23.89**
16276	2600	792	4.89	817	5.53	866	6.84	912	8.13	957	9.47	1041	12.17	1120	14.96	**1195**	**17.84**	**1267**	**20.85**	**1336**	**24.00**	**1403**	**27.31**
18780	3000	906	7.26	929	8.02	972	9.52	1013	11.01	1053	12.51	1129	15.56	**1202**	**18.73**	**1271**	**21.95**	**1337**	**25.23**	**1401**	**28.61**	**1463**	**32.10**
21284	3400	1022	10.36	1041	11.17	1080	12.88	1117	14.57	**1153**	**16.26**	**1223**	**19.70**	**1290**	**23.22**	**1353**	**26.73**	**1415**	**30.38**	**1474**	**34.05**		
23788	3800	1137	14.19	**1155**	**15.14**	**1190**	**17.04**	**1224**	**18.94**	**1257**	**20.84**	**1321**	**24.65**	**1382**	**28.47**	**1441**	**32.37**						

MAXIMUM RPM: Class I — 1143 Class II — 1475

365 BCV/BCVR/BCVSH

Wheel Dia. = 36.50 inches
Outlet Area = 7.66 ft²

Fan Efficiency Grade: FEG85
Max. BHP = 19.42 (RPM÷1000)³

CFM	OV	0.25" SP		0.5" SP		1" SP		1.5" SP		2" SP		3" SP		4" SP		5" SP		6" SP		7" SP		8" SP	
		RPM	BHP	RPM	BHP	RPM	BHP	RPM	BHP	RPM	BHP	RPM	BHP	RPM	BHP	RPM	BHP	RPM	BHP	RPM	BHP	RPM	BHP
6128	800	271	0.38	326	0.65	430	1.27																
7660	1000	312	0.57	359	0.89	445	1.58	527	2.37														
9192	1200	357	0.84	397	1.20	472	1.99	543	2.86	610	3.77												
10724	1400	404	1.19	439	1.60	505	2.48	567	3.41	628	4.44	744	6.63										
12256	1600	453	1.65	483	2.09	542	3.07	598	4.09	653	5.20	758	7.57	859	10.14								
13788	1800	502	2.21	529	2.70	582	3.77	633	4.89	683	6.08	779	8.62	871	11.33	961	14.26						
15320	2000	552	2.91	577	3.46	625	4.61	671	5.82	717	7.09	805	9.79	890	12.68	972	15.70	**1053**	**18.93**				
16852	2200	603	3.76	625	4.34	669	5.58	712	6.90	754	8.26	836	11.14	915	14.20	992	17.44	**1066**	**20.75**	**1139**	**24.23**	**1215**	**28.13**
19916	2600	705	5.94	724	6.62	761	8.02	798	9.52	835	11.10	906	14.34	975	17.72	**1042**	**21.26**	**1108**	**24.97**	**1173**	**28.83**	**1236**	**32.73**
22980	3000	808	8.86	824	9.62	857	11.24	889	12.89	921	14.63	984	18.27	**1045**	**22.00**	**1106**	**25.94**	**1165**	**29.99**	**1222**	**34.09**	**1279**	**38.39**
26044	3400	911	12.63	926	13.52	955	15.32	984	17.18	**1012**	**19.07**	**1068**	**23.06**	**1123**	**27.20**	**1177**	**31.44**	**1231**	**35.86**	**1283**	**40.32**		
29108	3800	**1015**	**17.40**	**1028**	**18.37**	**1054**	**20.35**	**1080**	**22.39**	**1106**	**24.51**	**1157**	**28.87**	**1206**	**33.33**	**1255**	**37.97**						

MAXIMUM RPM: Class I — 995 Class II — 1283

402 BCV/BCVSH

Wheel Dia. = 40.25 inches
Outlet Area = 9.31 ft²

Fan Efficiency Grade: FEG85
Max. BHP = 31.67 (RPM÷1000)³

CFM	OV	0.25" SP		0.5" SP		1" SP		1.5" SP		2" SP		3" SP		4" SP		5" SP		6" SP		7" SP		8" SP	
		RPM	BHP	RPM	BHP	RPM	BHP	RPM	BHP	RPM	BHP	RPM	BHP	RPM	BHP	RPM	BHP	RPM	BHP	RPM	BHP	RPM	BHP
7448	800	246	0.47	296	0.79	390	1.55																
9310	1000	283	0.70	325	1.08	404	1.93	478	2.89														
11172	1200	324	1.02	360	1.46	428	2.42	492	3.46	553	4.58												
13034	1400	367	1.45	398	1.94	457	2.99	515	4.17	569	5.38	675	8.08										
14896	1600	411	2.00	438	2.54	491	3.72	542	4.97	592	6.32	687	9.18	779	12.33								
16758	1800	455	2.68	480	3.29	528	4.59	574	5.94	619	7.38	706	10.46	789	13.73	871	17.31						
18620	2000	501	3.55	523	4.20	566	5.58	609	7.09	650	8.62	730	11.90	807	15.41	882	19.12	**955**	**23.02**				
20482	2200	546	4.55	567	5.28	607	6.80	645	8.37	684	10.06	758	13.54	829	17.22	899	21.17	**966**	**25.17**	**1033**	**29.47**	**1102**	**34.21**
24206	2600	639	7.21	656	8.03	690	9.75	724	11.59	757	13.49	821	17.40	884	21.53	**945**	**25.85**	**1005**	**30.38**	**1064**	**35.08**	**1121**	**39.81**
27930	3000	732	10.75	747	11.69	777	13.66	806	15.67	835	17.78	892	22.20	**948**	**26.79**	**1002**	**31.46**	**1056**	**36.42**	**1108**	**41.44**	**1160**	**46.70**
31654	3400	826	15.35	839	16.40	866	18.62	892	20.87	**918**	**23.21**	**968**	**27.99**	**1018**	**33.04**	**1067**	**38.20**	**1116**	**43.57**	**1163**	**48.97**		
35378	3800	**920**	**21.13**	**932**	**22.32**	**956**	**24.76**	**979**	**27.20**	**1003**	**29.81**	**1048**	**34.99**	**1093**	**40.46**	**1138**	**46.16**						

MAXIMUM RPM: Class I — 903 Class II — 1163

Selections above 4000 RPM not recommended. Consult factory.

Performance is for installation Type B & D: Free or ducted inlet, ducted outlet.
Power rating (bhp) does not include transmission losses.
Performance ratings do not include the effects of appurtenances (accessories).

Class I fans are shown in regular face type.
Class II fans are shown in **bold** face type.
Underlined figures indicate maximum static efficiencies.

Backward Inclined

445 BCV/BCVSH

Wheel Dia. = 44.50 inches **Fan Efficiency Grade: FEG85**
Outlet Area = 11.39 ft² **Max. BHP = 52.32 (RPM÷1000)³**

CFM	OV	0.25" SP		0.5" SP		1" SP		1.5" SP		2" SP		3" SP		4" SP		5" SP		6" SP		7" SP		8" SP	
		RPM	BHP	RPM	BHP	RPM	BHP	RPM	BHP	RPM	BHP	RPM	BHP	RPM	BHP	RPM	BHP	RPM	BHP	RPM	BHP	RPM	BHP
9112	800	222	0.57	268	0.97	352	1.88																
11390	1000	256	0.85	294	1.32	365	2.36	432	3.52														
13668	1200	293	1.25	325	1.78	387	2.95	445	4.24	501	5.62												
15946	1400	332	1.78	360	2.38	414	3.68	466	5.10	515	6.59	611	9.90										
18224	1600	372	2.46	396	3.10	444	4.54	491	6.10	536	7.75	621	11.21	705	15.11								
20502	1800	412	3.29	434	4.02	478	5.62	520	7.30	560	9.02	639	12.81	714	16.82	788	21.18						
22780	2000	453	4.33	473	5.13	513	6.87	551	8.67	588	10.54	661	14.59	730	18.85	798	23.40	**864**	**28.18**				
25058	2200	495	5.60	513	6.46	549	8.30	584	10.26	619	12.32	686	16.58	750	21.07	813	25.87	**874**	**30.81**	**935**	**36.12**	**996**	**41.75**
29614	2600	578	8.81	594	9.84	625	11.96	655	14.17	685	16.51	743	21.30	800	26.37	**855**	**31.63**	**909**	**37.14**	**962**	**42.84**	**1014**	**48.69**
34170	3000	663	13.19	676	14.31	703	16.71	730	19.23	756	21.80	807	27.15	**858**	**32.80**	**907**	**38.54**	**955**	**44.50**	**1003**	**50.78**	**1050**	**57.22**
38726	3400	748	18.83	760	20.14	784	22.82	807	25.53	830	28.33	**876**	**34.27**	**921**	**40.42**	**966**	**46.82**	**1010**	**53.36**				
43282	3800	**833**	**25.91**	**844**	**27.38**	**865**	**30.29**	**886**	**33.30**	**907**	**36.40**	**949**	**42.91**	**990**	**49.66**	**1030**	**56.54**						

MAXIMUM RPM: Class I — 817 Class II — 1052

490 BCV/BCVSH

Wheel Dia. = 49.00 inches **Fan Efficiency Grade: FEG85**
Outlet Area = 13.80 ft² **Max. BHP = 84.69 (RPM÷1000)³**

CFM	OV	0.25" SP		0.5" SP		1" SP		1.5" SP		2" SP		3" SP		4" SP		5" SP		6" SP		7" SP		8" SP	
		RPM	BHP	RPM	BHP	RPM	BHP	RPM	BHP	RPM	BHP	RPM	BHP	RPM	BHP	RPM	BHP	RPM	BHP	RPM	BHP	RPM	BHP
11040	800	202	0.69	243	1.17	320	2.29																
13800	1000	233	1.04	267	1.60	332	2.87	392	4.26														
16560	1200	266	1.51	295	2.15	351	3.56	404	5.13	455	6.82												
19320	1400	301	2.14	327	2.88	376	4.46	423	6.18	468	8.01	554	11.94										
22080	1600	337	2.96	360	3.78	403	5.50	446	7.40	486	9.35	564	13.59	640	18.28								
24840	1800	374	3.99	394	4.87	433	6.77	472	8.84	509	10.97	580	15.51	648	20.34	716	25.71						
27600	2000	411	5.23	430	6.24	465	8.28	500	10.49	534	12.78	600	17.67	663	22.85	724	28.28	**785**	**34.19**				
30360	2200	449	6.77	466	7.84	498	10.03	530	12.41	562	14.92	623	20.10	681	25.53	739	31.44	**794**	**37.38**	**849**	**43.75**	**905**	**50.68**
35880	2600	525	10.69	539	11.90	567	14.46	595	17.20	621	19.92	674	25.74	726	31.90	**776**	**38.28**	**825**	**44.93**	**874**	**51.99**	**921**	**59.03**
41400	3000	601	15.90	614	17.36	638	20.21	662	23.21	686	26.37	733	32.94	**778**	**39.59**	**823**	**46.61**	**867**	**53.89**	**911**	**61.59**	**953**	**69.24**
46920	3400	679	22.81	690	24.39	711	27.56	733	30.97	**754**	**34.39**	**795**	**41.47**	**836**	**48.93**	**877**	**56.71**	**917**	**64.64**	**956**	**72.73**		
52440	3800	**756**	**31.35**	**766**	**33.13**	**785**	**36.65**	**805**	**40.44**	**824**	**44.19**	**861**	**51.88**	**898**	**60.00**	**935**	**68.46**						

MAXIMUM RPM: Class I — 742 Class II — 956

542 BCV/BCVSH

Wheel Dia. = 54.25 inches **Fan Efficiency Grade: FEG85**
Outlet Area = 16.92 ft² **Max. BHP = 140.88 (RPM÷1000)³**

CFM	OV	0.25" SP		0.5" SP		1" SP		1.5" SP		2" SP		3" SP		4" SP		5" SP		6" SP		7" SP		8" SP	
		RPM	BHP	RPM	BHP	RPM	BHP	RPM	BHP	RPM	BHP	RPM	BHP	RPM	BHP	RPM	BHP	RPM	BHP	RPM	BHP	RPM	BHP
13536	800	182	0.84	220	1.44	289	2.80																
16920	1000	210	1.27	241	1.95	300	3.52	354	5.22														
20304	1200	240	1.85	267	2.65	317	4.37	365	6.29	411	8.36												
23688	1400	272	2.63	295	3.52	339	5.44	382	7.57	423	9.83	501	14.69										
27072	1600	305	3.64	325	4.62	364	6.74	403	9.08	439	11.46	510	16.72	578	22.41								
30456	1800	338	4.89	356	5.97	392	8.35	426	10.81	460	13.46	524	19.02	586	25.03	646	31.42						
33840	2000	372	6.46	388	7.62	420	10.15	452	12.90	482	15.63	542	21.66	599	28.03	654	34.68	**709**	**41.92**				
37224	2200	406	8.32	421	9.62	450	12.32	479	15.24	507	18.22	562	24.55	616	31.44	667	38.46	**717**	**45.80**	**767**	**53.67**	**817**	**62.03**
43992	2600	474	13.09	487	14.61	512	17.71	537	21.03	561	24.43	609	31.59	656	39.14	**701**	**46.94**	**746**	**55.27**	**789**	**63.63**	**832**	**72.41**
50760	3000	543	19.51	555	21.33	577	24.87	598	28.46	620	32.38	662	40.36	**703**	**48.59**	**744**	**57.28**	**784**	**66.29**	**822**	**75.26**	**861**	**84.95**
57528	3400	613	27.91	623	29.87	643	33.91	662	37.95	**681**	**42.14**	**719**	**51.02**	**756**	**60.20**	**792**	**69.48**	**828**	**79.16**	**863**	**89.01**		
64296	3800	**683**	**38.45**	**692**	**40.63**	**709**	**44.92**	**727**	**49.54**	**744**	**54.11**	**778**	**63.67**	**812**	**73.79**	**845**	**84.06**						

MAXIMUM RPM: Class I — 670 Class II — 863

600 BCV/BCVSH

Wheel Dia. = 60.00 inches **Fan Efficiency Grade: FEG85**
Outlet Area = 20.70 ft² **Max. BHP = 233.14 (RPM÷1000)³**

CFM	OV	0.25" SP		0.5" SP		1" SP		1.5" SP		2" SP		3" SP		4" SP		5" SP		6" SP		7" SP		8" SP	
		RPM	BHP	RPM	BHP	RPM	BHP	RPM	BHP	RPM	BHP	RPM	BHP	RPM	BHP	RPM	BHP	RPM	BHP	RPM	BHP	RPM	BHP
16560	800	165	1.04	199	1.77	261	3.41																
20700	1000	190	1.55	218	2.39	271	4.30	320	6.38														
24840	1200	217	2.26	241	3.23	287	5.36	330	7.70	371	10.17												
28980	1400	246	3.22	267	4.32	307	6.68	345	9.23	382	11.99	453	17.98										
33120	1600	276	4.47	294	5.66	330	8.31	364	11.07	397	14.02	461	20.43	523	27.48								
37260	1800	306	6.01	322	7.31	354	10.18	385	13.20	416	16.48	474	23.30	530	30.65	584	38.41						
41400	2000	336	7.87	351	9.34	380	12.43	408	15.69	436	19.15	490	26.49	542	34.37	591	42.36	**641**	**51.26**				
45540	2200	367	10.17	380	11.70	407	15.08	433	18.63	459	22.38	509	30.18	557	38.46	603	47.03	**648**	**55.95**	**693**	**65.52**	**739**	**75.98**
53820	2600	429	16.05	440	17.83	463	21.68	486	25.80	508	30.01	551	38.72	593	47.85	**634**	**57.47**	**674**	**67.45**	**714**	**78.04**	**752**	**88.48**
62100	3000	491	23.87	502	26.12	521	30.30	541	34.87	560	39.48	599	49.48	**636**	**59.54**	**673**	**70.16**	**708**	**80.80**	**744**	**92.36**	**778**	**103.72**
70380	3400	554	34.10	563	36.48	581	41.39	599	46.52	**616**	**51.62**	**650**	**62.39**	**683**	**73.46**	**716**	**84.96**	**749**	**96.97**				
78660	3800	**618**	**47.14**	**626**	**49.78**	**642**	**55.19**	**657**	**60.51**	**673**	**66.27**	**704**	**78.07**	**734**	**90.19**	**764**	**102.81**						

MAXIMUM RPM: Class I — 606 Class II — 780

Performance is for installation Type B & D: Free or ducted inlet, ducted outlet.
Power rating (bhp) does not include transmission losses.
Performance ratings do not include the effects of appurtenances (accessories).

Class I fans are shown in regular face type.
Class II fans are shown in **bold** face type.
Underlined figures indicate maximum static efficiencies.

Airfoil

122 BAV

Wheel Dia. = 12.25 inches
Outlet Area = 0.86 ft²

Fan Efficiency Grade: FEG85
Max. BHP = 0.045 (RPM÷1000)³

CFM	OV	0.25"		0.5"		1"		1.5"		2"		3"		4"		5"		6"		7"		8"	
		RPM	BHP	RPM	BHP	RPM	BHP	RPM	BHP	RPM	BHP	RPM	BHP	RPM	BHP	RPM	BHP	RPM	BHP	RPM	BHP	RPM	BHP
688	800	1070	0.05	1242	0.09	1510	0.16	1738	0.24	1952	0.33												
860	1000	1251	0.08	1402	0.12	1656	0.20	1864	0.29	2051	0.39	2398	0.61	2731	0.86								
1032	1200	1441	0.11	1574	0.16	1810	0.26	2010	0.37	2185	0.47	2497	0.70	2786	0.96	3069	1.25						
1204	1400	1637	0.16	1756	0.22	1970	0.33	2163	0.45	2331	0.57	2625	0.82	2892	1.09	3142	1.39	3386	1.71	3627	2.05	3861	2.41
1376	1600	1837	0.22	1945	0.28	2140	0.41	2320	0.54	2484	0.68	2770	0.96	3020	1.25	3255	1.55	3476	1.89	3691	2.24	3904	2.61
1548	1800	2040	0.30	2138	0.37	2318	0.50	2484	0.65	2641	0.80	2920	1.12	3164	1.43	3384	1.75	3595	2.10	3795	2.46	3989	2.84
1720	2000	2245	0.39	2335	0.47	2502	0.62	2656	0.77	2803	0.94	3074	1.29	3312	1.63	3528	1.98	3727	2.34	3917	2.71	**4102**	**3.11**
1892	2200	2452	0.51	2535	0.59	2690	0.76	2835	0.92	2972	1.09	3231	1.47	3465	1.86	3676	2.23	3872	2.62	**4055**	**3.02**	**4228**	**3.42**
2236	2600	2869	0.79	2941	0.89	3077	1.09	3206	1.29	3327	1.48	3559	1.89	3779	2.34	3983	2.80	**4171**	**3.25**	**4347**	**3.70**	**4514**	**4.15**
2580	3000	3289	1.18	3352	1.30	3473	1.53	3589	1.76	3699	1.98	3908	2.43	**4108**	**2.91**	**4300**	**3.42**	**4482**	**3.95**	**4653**	**4.48**	**4814**	**5.00**
2924	3400	3712	1.68	3768	1.81	3876	2.08	3981	2.34	**4082**	**2.60**	**4274**	**3.10**	**4456**	**3.61**	**4631**	**4.15**	**4802**	**4.73**	**4967**	**5.33**	**5125**	**5.93**
3268	3800	4136	2.31	4186	2.46	**4285**	**2.75**	**4380**	**3.05**	**4473**	**3.34**	**4650**	**3.92**	**4819**	**4.48**	**4981**	**5.05**	**5138**	**5.64**				

MAXIMUM RPM: Class I — 3990 Class II — 5206

Selections above 4000 RPM not recommended. Consult factory.

135 BAV

Wheel Dia. = 13.50 inches
Outlet Area = 1.05 ft²

Fan Efficiency Grade: FEG90
Max. BHP = 0.081 (RPM÷1000)³

CFM	OV	0.25"		0.5"		1"		1.5"		2"		3"		4"		5"		6"		7"		8"	
		RPM	BHP	RPM	BHP	RPM	BHP	RPM	BHP	RPM	BHP	RPM	BHP	RPM	BHP	RPM	BHP	RPM	BHP	RPM	BHP	RPM	BHP
840	800	886	0.05	1050	0.09	1327	0.19																
1050	1000	1024	0.08	1171	0.13	1410	0.23	1628	0.34														
1260	1200	1173	0.11	1298	0.17	1526	0.29	1713	0.41	1891	0.54												
1470	1400	1326	0.16	1438	0.22	1648	0.36	1827	0.49	1986	0.64	2300	0.97										
1680	1600	1482	0.22	1586	0.29	1773	0.44	1948	0.59	2100	0.75	2370	1.08	2653	1.48								
1890	1800	1641	0.29	1737	0.37	1906	0.53	2071	0.70	2221	0.88	2479	1.24	2713	1.61	2968	2.07	3235	2.62				
2100	2000	1802	0.37	1891	0.46	2048	0.64	2197	0.83	2343	1.02	2596	1.42	2819	1.82	3027	2.24	3256	2.75	**3498**	**3.34**		
2310	2200	1964	0.48	2047	0.57	2195	0.77	2332	0.97	2467	1.18	2717	1.61	2933	2.05	3132	2.50	**3321**	**2.96**	**3525**	**3.50**	**3745**	**4.13**
2730	2600	2291	0.74	2364	0.85	2498	1.08	2619	1.32	2734	1.55	2962	2.05	3174	2.57	**3362**	**3.08**	**3537**	**3.60**	**3705**	**4.13**	**3864**	**4.67**
3150	3000	2622	1.10	2687	1.23	2808	1.49	2919	1.75	3022	2.02	3221	2.57	**3419**	**3.16**	**3605**	**3.75**	**3775**	**4.34**	**3932**	**4.93**	**4083**	**5.53**
3570	3400	2955	1.55	3013	1.70	3123	2.00	3226	2.30	**3322**	**2.60**	**3501**	**3.21**	**3677**	**3.84**	**3851**	**4.50**	**4019**	**5.18**	**4175**	**5.85**		
3990	3800	**3290**	**2.13**	**3342**	**2.29**	**3442**	**2.62**	**3537**	**2.96**	**3628**	**3.29**	**3795**	**3.97**	**3953**	**4.65**	**4110**	**5.37**						

MAXIMUM RPM: Class I — 3265 Class II — 4260

150 BAV

Wheel Dia. = 15.00 inches
Outlet Area = 1.29 ft²

Fan Efficiency Grade: FEG80
Max. BHP = 0.125 (RPM÷1000)³

CFM	OV	0.25"		0.5"		1"		1.5"		2"		3"		4"		5"		6"		7"		8"	
		RPM	BHP	RPM	BHP	RPM	BHP	RPM	BHP	RPM	BHP	RPM	BHP	RPM	BHP	RPM	BHP	RPM	BHP	RPM	BHP	RPM	BHP
1032	800	874	0.08	1015	0.13	1233	0.23	1420	0.35	1594	0.49												
1290	1000	1022	0.12	1145	0.18	1353	0.31	1522	0.44	1675	0.58	1958	0.91	2231	1.29								
1548	1200	1177	0.17	1285	0.24	1479	0.39	1642	0.55	1784	0.71	2040	1.05	2275	1.44	2506	1.87						
1806	1400	1337	0.24	1434	0.32	1610	0.49	1766	0.67	1904	0.85	2144	1.23	2362	1.63	2566	2.08	2765	2.56	2962	3.08	3153	3.62
2064	1600	1501	0.34	1589	0.43	1748	0.61	1895	0.81	2029	1.02	2263	1.44	2467	1.87	2658	2.33	2839	2.83	3015	3.36	3189	3.92
2322	1800	1667	0.45	1747	0.55	1893	0.75	2029	0.97	2158	1.21	2385	1.67	2584	2.14	2764	2.63	2936	3.14	3100	3.69	3258	4.27
2580	2000	1834	0.59	1908	0.71	2044	0.93	2170	1.16	2290	1.41	2511	1.93	2705	2.45	2882	2.97	3044	3.51	3200	4.07	**3351**	**4.67**
2838	2200	2003	0.76	2071	0.89	2198	1.14	2316	1.38	2427	1.64	2640	2.21	2830	2.78	3003	3.35	3163	3.93	**3312**	**4.52**	**3453**	**5.12**
3354	2600	2344	1.19	2402	1.34	2514	1.64	2619	1.94	2718	2.22	2907	2.83	3087	3.51	3253	4.20	**3407**	**4.87**	**3551**	**5.55**	**3687**	**6.22**
3870	3000	2687	1.77	2739	1.95	2838	2.30	2932	2.64	3022	2.98	3193	3.65	**3355**	**4.36**	**3512**	**5.13**	**3661**	**5.93**	**3800**	**6.72**	**3932**	**7.49**
4386	3400	3033	2.52	3078	2.72	3167	3.12	3252	3.51	**3335**	**3.90**	**3491**	**4.66**	**3640**	**5.42**	**3783**	**6.23**	**3923**	**7.10**	**4058**	**8.00**	**4186**	**8.90**
4902	3800	**3379**	**3.47**	**3420**	**3.69**	**3500**	**4.13**	**3578**	**4.57**	**3654**	**5.01**	**3799**	**5.88**	**3936**	**6.71**	**4069**	**7.57**	**4197**	**8.47**				

MAXIMUM RPM: Class I — 3260 Class II — 4253

165 BAV

Wheel Dia. = 16.50 inches
Outlet Area = 1.57 ft²

Fan Efficiency Grade: FEG85
Max. BHP = 0.222 (RPM÷1000)³

CFM	OV	0.25"		0.5"		1"		1.5"		2"		3"		4"		5"		6"		7"		8"	
		RPM	BHP	RPM	BHP	RPM	BHP	RPM	BHP	RPM	BHP	RPM	BHP	RPM	BHP	RPM	BHP	RPM	BHP	RPM	BHP	RPM	BHP
1256	800	726	0.08	859	0.14	1086	0.28																
1570	1000	838	0.12	959	0.19	1154	0.34	1332	0.51														
1884	1200	960	0.17	1063	0.25	1249	0.43	1402	0.61	1547	0.81												
2198	1400	1086	0.24	1177	0.33	1349	0.53	1496	0.74	1625	0.95	1882	1.44										
2512	1600	1214	0.32	1298	0.43	1451	0.65	1595	0.89	1719	1.12	1940	1.61	2171	2.21	2413	2.95						
2826	1800	1344	0.43	1422	0.55	1561	0.79	1695	1.05	1818	1.32	2029	1.85	2220	2.41	2429	3.10	2647	3.92				
3140	2000	1475	0.56	1548	0.69	1677	0.96	1799	1.24	1918	1.53	2125	2.12	2307	2.72	2478	3.35	2664	4.10	**2862**	**4.99**		
3454	2200	1608	0.71	1676	0.86	1797	1.15	1909	1.45	2020	1.76	2224	2.41	2400	3.06	2564	3.73	**2718**	**4.42**	**2885**	**5.23**	**3064**	**6.17**
4082	2600	1876	1.11	1936	1.28	2046	1.62	2144	1.97	2238	2.32	2425	3.07	2598	3.84	**2752**	**4.60**	**2895**	**5.38**	**3032**	**6.18**	**3162**	**6.98**
4710	3000	2147	1.64	2200	1.84	2299	2.23	2390	2.63	2474	3.02	2637	3.85	**2799**	**4.72**	**2951**	**5.61**	**3090**	**6.49**	**3219**	**7.38**	**3342**	**8.27**
5338	3400	2420	2.32	2467	2.55	2557	2.99	2641	3.44	**2720**	**3.89**	**2867**	**4.80**	**3010**	**5.75**	**3153**	**6.74**	**3290**	**7.74**	**3417**	**8.75**		
5966	3800	**2694**	**3.18**	**2737**	**3.43**	**2819**	**3.93**	**2896**	**4.43**	**2970**	**4.93**	**3107**	**5.94**	**3236**	**6.96**	**3364**	**8.02**						

MAXIMUM RPM: Class I — 2673 Class II — 3487

Performance is for installation Type B & D: Free or ducted inlet, ducted outlet.
Power rating (bhp) does not include transmission losses.
Performance ratings do not include the effects of appurtenances (accessories).

Class I fans are shown in regular face type.
Class II fans are shown in **bold** face type.
Underlined figures indicate maximum static efficiencies.

182 BAV

Wheel Dia. = 18.25 inches
Outlet Area = 1.92 ft²

Fan Efficiency Grade: FEG90
Max. BHP = 0.44 (RPM÷1000)³

CFM	OV	0.25"		0.5"		1"		1.5"		2"		3"		4"		5"		6"		7"		8"	
		RPM	BHP	RPM	BHP	RPM	BHP	RPM	BHP	RPM	BHP	RPM	BHP	RPM	BHP	RPM	BHP	RPM	BHP	RPM	BHP	RPM	BHP
1536	800	601	0.09	713	0.16																		
1920	1000	692	0.13	794	0.22	964	0.39	1151	0.62														
2304	1200	789	0.19	881	0.29	1036	0.49	1175	0.70	1333	0.98												
2688	1400	892	0.27	973	0.38	1117	0.61	1241	0.84	1360	1.09												
3072	1600	998	0.36	1068	0.48	1202	0.74	1321	1.01	1426	1.27	1644	1.89										
3456	1800	1105	0.48	1168	0.61	1292	0.90	1403	1.20	1506	1.50	1690	2.11	1893	2.86								
3840	2000	1215	0.62	1272	0.77	1385	1.08	1490	1.41	1588	1.74	1763	2.41	1929	3.12	2116	3.99	**2302**	**4.97**				
4224	2200	1325	0.79	1377	0.95	1480	1.29	1581	1.65	1673	2.01	1843	2.75	1994	3.48	2147	4.29	**2318**	**5.26**	**2490**	**6.33**		
4992	2600	1549	1.23	1593	1.42	1680	1.81	1768	2.22	1852	2.64	2008	3.50	2152	4.37	**2283**	**5.23**	**2408**	**6.11**	**2540**	**7.10**	**2684**	**8.22**
5760	3000	1774	1.82	1813	2.04	1889	2.48	1964	2.93	2040	3.41	2185	4.39	**2318**	**5.38**	**2443**	**6.38**	**2561**	**7.39**	**2671**	**8.37**	**2780**	**9.40**
6528	3400	2001	2.59	2035	2.83	2102	3.32	2169	3.82	**2236**	**4.35**	**2369**	**5.44**	**2494**	**6.55**	**2611**	**7.67**	**2723**	**8.81**	**2831**	**9.96**		
7296	3800	**2229**	**3.55**	**2260**	**3.82**	**2320**	**4.36**	**2380**	**4.91**	**2439**	**5.48**	**2559**	**6.67**	**2676**	**7.90**	**2787**	**9.14**						

MAXIMUM RPM: Class I — 2207 Class II — 2879

200 BAV

Wheel Dia. = 20.00 inches
Outlet Area = 2.30 ft²

Fan Efficiency Grade: FEG90
Max. BHP = 0.695 (RPM÷1000)³

CFM	OV	0.25"		0.5"		1"		1.5"		2"		3"		4"		5"		6"		7"		8"	
		RPM	BHP	RPM	BHP	RPM	BHP	RPM	BHP	RPM	BHP	RPM	BHP	RPM	BHP	RPM	BHP	RPM	BHP	RPM	BHP	RPM	BHP
1840	800	548	0.11	650	0.19																		
2300	1000	631	0.16	723	0.26	879	0.47	1050	0.75														
2760	1200	719	0.23	802	0.34	944	0.58	1071	0.84	1216	1.17												
3220	1400	812	0.32	886	0.45	1018	0.73	1131	1.01	1240	1.31												
3680	1600	908	0.43	973	0.58	1096	0.89	1204	1.21	1300	1.53	1500	2.27										
4140	1800	1006	0.57	1064	0.73	1177	1.08	1279	1.43	1373	1.80	1541	2.52	1727	3.44								
4600	2000	1106	0.74	1158	0.92	1262	1.29	1358	1.69	1447	2.09	1607	2.88	1759	3.74	1930	4.78	**2100**	**5.96**				
5060	2200	1207	0.95	1254	1.14	1348	1.54	1440	1.97	1524	2.40	1679	3.29	1817	4.16	1958	5.14	**2115**	**6.30**	**2272**	**7.60**		
5980	2600	1410	1.47	1450	1.69	1530	2.16	1610	2.65	1688	3.16	1830	4.18	1961	5.23	**2081**	**6.26**	**2196**	**7.32**	**2316**	**8.50**	**2448**	**9.86**
6900	3000	1615	2.18	1650	2.43	1720	2.96	1789	3.50	1858	4.07	1990	5.24	**2112**	**6.43**	**2227**	**7.64**	**2334**	**8.84**	**2435**	**10.03**	**2535**	**11.26**
7820	3400	1822	3.09	1853	3.38	1914	3.96	1975	4.56	**2036**	**5.19**	**2158**	**6.50**	**2272**	**7.83**	**2379**	**9.17**	**2482**	**10.55**	**2580**	**11.92**		
8740	3800	**2029**	**4.23**	**2057**	**4.55**	**2112**	**5.20**	**2167**	**5.87**	**2221**	**6.54**	**2331**	**7.97**	**2438**	**9.45**	**2540**	**10.94**						

MAXIMUM RPM: Class I — 2014 Class II — 2627

222 BAV

Wheel Dia. = 20.00 inches
Outlet Area = 2.30 ft²

Fan Efficiency Grade: FEG90
Max. BHP = 0.695 (RPM÷1000)³

CFM	OV	0.25"		0.5"		1"		1.5"		2"		3"		4"		5"		6"		7"		8"	
		RPM	BHP	RPM	BHP	RPM	BHP	RPM	BHP	RPM	BHP	RPM	BHP	RPM	BHP	RPM	BHP	RPM	BHP	RPM	BHP	RPM	BHP
2280	800	492	0.14	582	0.23	750	0.46																
2850	1000	569	0.21	649	0.32	784	0.57	920	0.86														
3420	1200	651	0.30	721	0.43	846	0.72	955	1.02	1068	1.37												
3990	1400	737	0.42	799	0.57	913	0.90	1013	1.24	1106	1.59	1300	2.42										
4560	1600	825	0.58	880	0.75	984	1.12	1079	1.50	1165	1.88	1329	2.71	1500	3.70								
5130	1800	915	0.77	964	0.96	1060	1.37	1148	1.79	1230	2.22	1377	3.09	1525	4.07	1678	5.19						
5700	2000	1006	1.01	1051	1.22	1138	1.66	1220	2.12	1298	2.59	1439	3.55	1569	4.54	1703	5.65	**1841**	**6.90**				
6270	2200	1098	1.30	1139	1.52	1219	2.00	1296	2.50	1369	3.01	1505	4.07	1627	5.12	1745	6.23	**1867**	**7.46**	**1992**	**8.80**		
7410	2600	1284	2.05	1319	2.31	1387	2.84	1454	3.41	1519	4.01	1643	5.23	1758	6.48	**1864**	**7.72**	**1964**	**8.98**	**2064**	**10.31**	**2167**	**11.75**
8550	3000	1472	3.06	1502	3.35	1562	3.95	1620	4.58	1678	5.24	1790	6.63	**1896**	**8.04**	**1996**	**9.47**	**2092**	**10.93**	**2181**	**12.36**	**2267**	**13.81**
9690	3400	1660	4.35	1687	4.68	1740	5.36	1792	6.05	**1844**	**6.78**	**1945**	**8.30**	**2043**	**9.89**	**2136**	**11.48**	**2226**	**13.10**	**2312**	**14.74**		
10830	3800	**1849**	**5.99**	**1873**	**6.35**	**1921**	**7.10**	**1968**	**7.86**	**2015**	**8.65**	**2107**	**10.31**	**2197**	**12.05**	**2283**	**13.80**	**2367**	**15.59**				

MAXIMUM RPM: Class I — 1814 Class II — 2367

245 BAV

Wheel Dia. = 24.50 inches
Outlet Area = 3.45 ft²

Fan Efficiency Grade: FEG90
Max. BHP = 1.93 (RPM÷1000)³

CFM	OV	0.25"		0.5"		1"		1.5"		2"		3"		4"		5"		6"		7"		8"	
		RPM	BHP	RPM	BHP	RPM	BHP	RPM	BHP	RPM	BHP	RPM	BHP	RPM	BHP	RPM	BHP	RPM	BHP	RPM	BHP	RPM	BHP
2760	800	446	0.17	528	0.28	681	0.56																
3450	1000	516	0.25	589	0.39	712	0.69	836	1.04														
4140	1200	591	0.36	655	0.53	768	0.87	866	1.23	969	1.65												
4830	1400	668	0.51	725	0.70	828	1.09	919	1.50	1004	1.92	1181	2.93										
5520	1600	748	0.70	798	0.90	893	1.35	979	1.81	1057	2.28	1206	3.28	1362	4.48								
6210	1800	830	0.93	875	1.16	961	1.65	1041	2.16	1116	2.68	1250	3.74	1385	4.93	1524	6.29						
6900	2000	913	1.23	953	1.47	1032	2.00	1107	2.56	1178	3.14	1306	4.30	1424	5.50	1546	6.84	**1671**	**8.34**				
7590	2200	996	1.57	1033	1.84	1106	2.41	1176	3.02	1242	3.64	1366	4.92	1477	6.20	1584	7.55	**1695**	**9.03**	**1809**	**10.67**		
8970	2600	1164	2.47	1196	2.78	1258	3.43	1319	4.12	1378	4.85	1490	6.32	1595	7.83	**1692**	**9.35**	**1782**	**10.86**	**1873**	**12.47**	**1968**	**14.24**
10350	3000	1334	3.69	1362	4.04	1416	4.77	1470	5.54	1522	6.34	1624	8.02	**1720**	**9.72**	**1812**	**11.47**	**1898**	**13.21**	**1979**	**14.95**	**2058**	**16.73**
11730	3400	1505	5.25	1530	5.66	1578	6.47	1626	7.32	**1673**	**8.20**	**1765**	**10.05**	**1853**	**11.95**	**1938**	**13.88**	**2020**	**15.85**	**2098**	**17.83**		
13110	3800	**1677**	**7.23**	**1699**	**7.67**	**1742**	**8.57**	**1785**	**9.50**	**1828**	**10.46**	**1911**	**12.45**	**1993**	**14.56**	**2072**	**16.70**	**2148**	**18.86**				

MAXIMUM RPM: Class I — 1647 Class II — 2149

Performance is for installation Type B & D: Free or ducted inlet, ducted outlet.
Power rating (bhp) does not include transmission losses.
Performance ratings do not include the effects of appurtenances (accessories).

Class I fans are shown in regular face type.
Class II fans are shown in **bold** face type.
Underlined figures indicate maximum static efficiencies.

Airfoil

270 BAV

Wheel Dia. = 27.00 inches
Outlet Area = 4.19 ft²

Fan Efficiency Grade: FEG90
Max. BHP = 3.07 (RPM÷1000)³

CFM	OV	0.25"		0.5"		1"		1.5"		2"		3"		4"		5"		6"		7"		8"	
		RPM	BHP	RPM	BHP	RPM	BHP	RPM	BHP	RPM	BHP	RPM	BHP	RPM	BHP	RPM	BHP	RPM	BHP	RPM	BHP	RPM	BHP
3352	800	401	0.19	479	0.34	618	0.67																
4190	1000	462	0.28	529	0.45	649	0.82	759	1.25	863	1.71												
5028	1200	528	0.40	588	0.60	693	1.02	790	1.48	882	1.98	1055	3.08										
5866	1400	597	0.55	649	0.78	744	1.26	832	1.76	915	2.30	1072	3.50	1219	4.79								
6704	1600	667	0.74	714	1.00	802	1.54	881	2.10	957	2.68	1101	3.95	1236	5.35	1365	6.81						
7542	1800	739	0.99	781	1.26	862	1.87	936	2.49	1005	3.12	1138	4.46	1263	5.92	1383	7.51	**1499**	**9.15**	**1611**	**10.86**		
8380	2000	812	1.28	851	1.59	925	2.24	994	2.92	1058	3.61	1181	5.05	1298	6.58	1410	8.23	**1518**	**9.98**	**1623**	**11.79**	**1726**	**13.67**
9218	2200	886	1.64	921	1.97	989	2.67	1055	3.42	1115	4.16	1230	5.72	1339	7.32	1445	9.05	**1546**	**10.86**	**1645**	**12.78**	**1741**	**14.76**
10894	2600	1036	2.57	1065	2.94	1124	3.74	1181	4.59	1236	5.47	1339	7.26	1435	9.07	**1529**	**10.96**	**1620**	**12.90**	**1709**	**14.96**	**1795**	**17.09**
12570	3000	1186	3.80	1212	4.23	1263	5.12	1314	6.07	1363	7.06	1458	9.11	**1545**	**11.15**	**1629**	**13.25**	**1712**	**15.42**	**1792**	**17.61**	**1871**	**19.88**
14246	3400	1338	5.40	1361	5.88	1406	6.87	1451	7.91	**1495**	**8.99**	**1582**	**11.28**	**1664**	**13.60**	**1741**	**15.92**	**1815**	**18.26**	**1889**	**20.71**		
15922	3800	**1490**	**7.40**	**1511**	**7.94**	**1552**	**9.05**	**1592**	**10.18**	**1632**	**11.35**	**1710**	**13.81**	**1787**	**16.40**	**1860**	**18.99**						

MAXIMUM RPM: Class I — 1474 Class II — 1923

300 BAV

Wheel Dia. = 30.00 inches
Outlet Area = 5.17 ft²

Fan Efficiency Grade: FEG90
Max. BHP = 5.21 (RPM÷1000)³

CFM	OV	0.25"		0.5"		1"		1.5"		2"		3"		4"		5"		6"		7"		8"	
		RPM	BHP	RPM	BHP	RPM	BHP	RPM	BHP	RPM	BHP	RPM	BHP	RPM	BHP	RPM	BHP	RPM	BHP	RPM	BHP	RPM	BHP
4136	800	361	0.24	431	0.41	556	0.82																
5170	1000	416	0.35	476	0.56	584	1.01	683	1.54	777	2.11												
6204	1200	475	0.49	529	0.74	623	1.26	711	1.82	794	2.45	950	3.81										
7238	1400	537	0.68	584	0.96	670	1.55	749	2.18	824	2.84	965	4.32	1097	5.91								
8272	1600	600	0.92	643	1.23	721	1.90	793	2.59	861	3.31	990	4.86	1112	6.59	1229	8.41						
9306	1800	665	1.22	703	1.56	776	2.31	842	3.07	904	3.84	1024	5.50	1137	7.32	1244	9.25	**1349**	**11.29**	**1450**	**13.41**		
10340	2000	731	1.59	765	1.96	832	2.76	894	3.60	952	4.45	1063	6.23	1168	8.11	1269	10.16	**1366**	**12.31**	**1461**	**14.56**	**1553**	**16.86**
11374	2200	797	2.03	829	2.43	890	3.29	949	4.22	1004	5.15	1107	7.06	1205	9.04	1300	11.15	**1392**	**13.42**	**1480**	**15.76**	**1567**	**18.22**
13442	2600	932	3.17	958	3.63	1011	4.61	1062	5.65	1112	6.75	1205	8.96	1292	11.22	**1376**	**13.53**	**1458**	**15.93**	**1538**	**18.46**	**1616**	**21.12**
15510	3000	1067	4.68	1090	5.21	1137	6.33	1182	7.49	1226	8.70	1311	11.22	**1390**	**13.75**	**1466**	**16.35**	**1540**	**19.01**	**1612**	**21.70**	**1683**	**24.50**
17578	3400	1203	6.64	1224	7.25	1265	8.48	1305	9.75	**1345**	**11.09**	**1423**	**13.90**	**1497**	**16.77**	**1566**	**19.62**	**1633**	**22.53**	**1699**	**25.52**		
19646	3800	**1340**	**9.11**	**1359**	**9.79**	**1396**	**11.15**	**1432**	**12.55**	**1468**	**14.00**	**1539**	**17.05**	**1607**	**20.20**	**1673**	**23.41**						

MAXIMUM RPM: Class I — 1327 Class II — 1731

330 BAV

Wheel Dia. = 33.00 inches
Outlet Area = 6.26 ft²

Fan Efficiency Grade: FEG90
Max. BHP = 8.38 (RPM÷1000)³

CFM	OV	0.25"		0.5"		1"		1.5"		2"		3"		4"		5"		6"		7"		8"	
		RPM	BHP	RPM	BHP	RPM	BHP	RPM	BHP	RPM	BHP	RPM	BHP	RPM	BHP	RPM	BHP	RPM	BHP	RPM	BHP	RPM	BHP
5008	800	328	0.29	392	0.50	506	1.00																
6260	1000	378	0.42	433	0.67	531	1.23	621	1.86	706	2.55												
7512	1200	432	0.59	481	0.90	567	1.53	647	2.21	722	2.97	864	4.62										
8764	1400	488	0.82	531	1.16	609	1.88	681	2.64	749	3.44	877	5.23	998	7.17								
10016	1600	546	1.11	584	1.49	656	2.30	721	3.14	783	4.01	901	5.90	1011	7.98	1117	10.18						
11268	1800	605	1.48	639	1.89	706	2.80	766	3.72	822	4.66	931	6.66	1034	8.87	1131	11.20	**1226**	**13.66**	**1318**	**16.23**		
12520	2000	665	1.92	696	2.37	757	3.35	813	4.36	866	5.40	967	7.56	1062	9.82	1154	12.31	**1242**	**14.91**	**1328**	**17.62**	**1412**	**20.41**
13772	2200	725	2.46	754	2.95	810	4.00	863	5.11	913	6.24	1006	8.53	1096	10.95	1182	13.50	**1265**	**16.23**	**1346**	**19.10**	**1424**	**22.03**
16276	2600	847	3.83	872	4.40	920	5.59	966	6.85	1012	8.19	1095	10.82	1175	13.59	**1251**	**16.37**	**1326**	**19.30**	**1398**	**22.34**	**1469**	**25.56**
18780	3000	971	5.68	992	6.32	1034	7.67	1075	9.07	1115	10.54	1193	13.61	**1264**	**16.65**	**1333**	**19.80**	**1401**	**23.05**	**1466**	**26.29**	**1531**	**29.71**
21284	3400	1095	8.07	1114	8.80	1151	10.28	1187	11.82	**1223**	**13.42**	**1294**	**16.83**	**1361**	**20.29**	**1424**	**23.75**	**1485**	**27.28**	**1545**	**30.90**		
23788	3800	**1219**	**11.05**	**1236**	**11.86**	**1270**	**13.52**	**1303**	**15.22**	**1335**	**16.95**	**1399**	**20.62**	**1462**	**24.49**	**1522**	**28.38**						

MAXIMUM RPM: Class I — 1206 Class II — 1573

365 BAV

Wheel Dia. = 36.50 inches
Outlet Area = 7.66 ft²

Fan Efficiency Grade: FEG90
Max. BHP = 14.05 (RPM÷1000)³

CFM	OV	0.25"		0.5"		1"		1.5"		2"		3"		4"		5"		6"		7"		8"	
		RPM	BHP	RPM	BHP	RPM	BHP	RPM	BHP	RPM	BHP	RPM	BHP	RPM	BHP	RPM	BHP	RPM	BHP	RPM	BHP	RPM	BHP
6128	800	294	0.35	348	0.59	449	1.22																
7660	1000	339	0.50	387	0.80	470	1.45	551	2.27														
9192	1200	388	0.72	430	1.07	506	1.82	572	2.62	640	3.60												
10724	1400	439	1.00	476	1.40	545	2.24	606	3.13	663	4.08	778	6.38										
12256	1600	491	1.35	524	1.80	587	2.75	645	3.74	697	4.76	797	7.04	898	9.78								
13788	1800	545	1.80	574	2.29	632	3.35	685	4.42	735	5.55	825	7.88	914	10.58	1004	13.69						
15320	2000	599	2.35	626	2.89	678	4.03	728	5.22	775	6.44	861	8.96	940	11.63	1021	14.74	1102	18.19	**1182**	**21.75**		
16852	2200	654	3.00	678	3.59	726	4.83	773	6.13	817	7.44	900	10.19	974	12.98	1046	16.01	1120	19.47	**1193**	**23.19**	**1266**	**27.10**
19916	2600	765	4.69	785	5.37	826	6.80	866	8.27	906	9.81	980	12.92	1050	16.15	1115	19.46	1176	22.84	**1237**	**26.47**	**1299**	**30.46**
22980	3000	876	6.93	894	7.72	930	9.35	965	11.02	1000	12.74	1068	16.29	**1132**	**19.91**	**1193**	**23.62**	**1251**	**27.42**	**1305**	**31.22**	**1358**	**35.17**
26044	3400	989	9.86	1004	10.72	1036	12.55	1067	14.41	**1098**	**16.31**	**1159**	**20.22**	**1218**	**24.25**	**1275**	**28.39**	**1329**	**32.53**	**1382**	**36.85**		
29108	3800	**1101**	**13.49**	**1116**	**14.51**	**1144**	**16.51**	**1172**	**18.56**	**1199**	**20.62**	**1255**	**24.96**	**1309**	**29.36**	**1362**	**33.91**						

MAXIMUM RPM: Class I — 1080 Class II — 1409

Performance is for installation Type B & D: Free or ducted inlet, ducted outlet.
Power rating (bhp) does not include transmission losses.
Performance ratings do not include the effects of appurtenances (accessories).

Class I fans are shown in regular face type.
Class II fans are shown in **bold** face type.
Underlined figures indicate maximum static efficiencies.

Forward Curved

75 FCV

Wheel Dia. = 7.6875" inches
Outlet Area = 0.325 ft²
Max. BHP = 0.98 (RPM÷1000)³

CFM	OV	1/8" SP		1/4" SP		3/8" SP		1/2" SP		5/8" SP		3/4" SP		1" SP		1¼" SP		1½" SP	
		RPM	BHP	RPM	BHP	RPM	BHP	RPM	BHP	RPM	BHP	RPM	BHP	RPM	BHP	RPM	BHP	RPM	BHP
260	800	632	0.02	832	0.03	-996	0.05												
292	900	659	0.02	847	0.04	1008	0.05	1148	0.07	1273	0.09								
325	1000	691	0.03	866	0.04	1022	0.06	1159	0.08	1283	0.10	1396	0.12						
357	1100	728	0.03	887	0.05	1037	0.06	1172	0.08	1293	0.11	1405	0.13						
390	1200	769	0.04	912	0.05	1056	0.07	1187	0.09	1306	0.12	1416	0.14	1616	0.19				
422	1300	812	0.05	940	0.06	1075	0.08	1203	0.10	1320	0.13	1428	0.15	1626	0.20	1803	0.25		
455	1400	858	0.05	972	0.07	1099	0.09	1222	0.11	1336	0.14	1443	0.16	1637	0.22	1812	0.27	1973	0.33
487	1500	905	0.07	1008	0.08	1125	0.10	1242	0.13	1354	0.15	1458	0.18	1649	0.23	1823	0.29	1982	0.35
520	1600	954	0.08	1048	0.09	1154	0.11	1265	0.14	1373	0.16	1475	0.19	1663	0.25	1834	0.31	1992	0.37
552	1700	1003	0.09	1088	0.11	1185	0.13	1290	0.15	1393	0.18	1493	0.21	1678	0.26	1847	0.33	2003	0.39
585	1800	1054	0.11	1132	0.12	1222	0.14	1318	0.17	1417	0.19	1513	0.22	1695	0.28	1861	0.35	2015	0.42
617	1900	1104	0.12	1176	0.14	1259	0.16	1348	0.18	1443	0.21	1535	0.24	1713	0.30	1876	0.37	2029	0.44
650	2000	1156	0.14	1223	0.16	1299	0.18	1382	0.20	1470	0.23	1559	0.26	1732	0.33	1893	0.39		
682	2100	1206	0.16	1269	0.18	1340	0.20	1418	0.23	1499	0.25	1585	0.28	1751	0.35				
715	2200	1259	0.19	1319	0.20	1384	0.22	1457	0.25	1533	0.28	1613	0.31	1774	0.37				
747	2300	1310	0.21	1367	0.23	1428	0.25	1496	0.27	1568	0.30	1642	0.33	1798	0.40				
780	2400	1364	0.24	1417	0.26	1474	0.28	1538	0.30	1606	0.33	1675	0.36						
812	2500	1415	0.27	1466	0.29	1521	0.31	1580	0.33	1644	0.36								

90 FCV

Wheel Dia. = 9.1875" inches
Outlet Area = 0.451 ft²
Max. BHP = 0.291 (RPM÷1000)³

CFM	OV	1/8" SP		1/4" SP		3/8" SP		1/2" SP		5/8" SP		3/4" SP		1" SP		1¼" SP		1½" SP	
		RPM	BHP	RPM	BHP	RPM	BHP	RPM	BHP	RPM	BHP	RPM	BHP	RPM	BHP	RPM	BHP	RPM	BHP
361	800	495	0.02	665	0.04	804	0.06	924	0.08	1032	0.10	1132	0.12						
406	900	511	0.03	673	0.04	809	0.06	927	0.08	1033	0.11	1130	0.13	1308	0.18				
451	1000	531	0.03	683	0.05	816	0.07	932	0.09	1036	0.12	1132	0.14	1305	0.20				
496	1100	554	0.04	695	0.06	824	0.08	938	0.10	1041	0.13	1135	0.15	1306	0.21	1460	0.27	1603	0.34
541	1200	579	0.04	710	0.06	834	0.09	946	0.12	1047	0.14	1140	0.17	1308	0.23	1459	0.29	1599	0.35
586	1300	607	0.05	728	0.07	845	0.10	954	0.13	1054	0.15	1146	0.18	1312	0.24	1461	0.31	1599	0.38
631	1400	636	0.06	748	0.08	859	0.11	964	0.14	1062	0.17	1153	0.20	1317	0.26	1465	0.33	1600	0.40
676	1500	666	0.07	770	0.10	875	0.12	976	0.15	1071	0.18	1161	0.22	1323	0.28	1469	0.35	1603	0.42
722	1600	698	0.09	795	0.11	893	0.14	990	0.17	1082	0.20	1170	0.23	1330	0.30	1475	0.38	1608	0.45
767	1700	730	0.10	820	0.12	913	0.15	1005	0.18	1094	0.22	1180	0.25	1338	0.33	1481	0.40	1612	0.48
812	1800	763	0.12	848	0.14	935	0.17	1022	0.20	1108	0.23	1191	0.27	1346	0.35	1487	0.43	1618	0.51
857	1900	796	0.13	876	0.16	958	0.19	1041	0.22	1124	0.26	1204	0.29	1356	0.37	1495	0.46	1624	0.54
902	2000	830	0.15	905	0.18	983	0.21	1062	0.24	1141	0.28	1218	0.32	1366	0.40	1504	0.48	1632	0.57
947	2100	864	0.17	936	0.20	1009	0.23	1085	0.26	1159	0.30	1234	0.34	1378	0.42	1513	0.51	1640	0.61
992	2200	899	0.20	967	0.22	1037	0.25	1108	0.29	1180	0.33	1251	0.37	1391	0.45	1523	0.54	1648	0.64
1037	2300	934	0.22	998	0.25	1065	0.28	1133	0.32	1202	0.36	1270	0.40	1405	0.48	1534	0.58	1658	0.68
1082	2400	969	0.25	1030	0.28	1094	0.31	1159	0.35	1225	0.39	1290	0.43	1421	0.52	1547	0.61	1668	0.71
1127	2500	1004	0.28	1063	0.31	1124	0.34	1186	0.38	1249	0.42	1312	0.46	1437	0.55	1561	0.65	1679	0.75

105 FCV

Wheel Dia. = 10.625" inches
Outlet Area = 0.594 ft²
Max. BHP = 0.85 (RPM÷1000)³

CFM	OV	1/8" SP		1/4" SP		3/8" SP		1/2" SP		5/8" SP		3/4" SP		1" SP		1¼" SP		1½" SP	
		RPM	BHP	RPM	BHP	RPM	BHP	RPM	BHP	RPM	BHP	RPM	BHP	RPM	BHP	RPM	BHP	RPM	BHP
475	800	404	0.04	519	0.06	617	0.08												
535	900	425	0.04	533	0.07	627	0.10	710	0.12										
594	1000	447	0.05	548	0.08	638	0.11	719	0.14	794	0.17	863	0.20						
653	1100	472	0.07	566	0.10	652	0.13	730	0.16	802	0.19	870	0.23						
713	1200	498	0.08	585	0.11	667	0.14	743	0.18	813	0.22	878	0.25	999	0.33				
772	1300	524	0.10	606	0.13	684	0.16	757	0.20	825	0.24	889	0.28	1006	0.36	1115	0.44		
832	1400	551	0.12	629	0.15	703	0.19	773	0.23	839	0.27	901	0.31	1016	0.39	1121	0.48	1220	0.57
891	1500	579	0.14	653	0.17	723	0.21	790	0.25	854	0.30	914	0.34	1026	0.43	1129	0.52	1226	0.62
950	1600	607	0.16	678	0.20	744	0.24	808	0.28	870	0.33	928	0.37	1038	0.47	1139	0.56	1233	0.66
1010	1700	636	0.19	704	0.23	767	0.27	828	0.32	887	0.36	944	0.41	1051	0.51	1150	0.61	1243	0.71
1069	1800	665	0.22	731	0.26	791	0.31	849	0.35	906	0.40	961	0.45	1065	0.55	1162	0.66	1253	0.77
1129	1900	695	0.25	758	0.30	816	0.34	872	0.39	926	0.44	979	0.49	1080	0.60	1175	0.71	1264	0.83
1188	2000	725	0.29	785	0.34	841	0.39	895	0.44	947	0.49	998	0.54	1096	0.65	1189	0.77	1277	0.89
1247	2100	754	0.33	813	0.38	867	0.43	919	0.48	969	0.54	1018	0.59	1113	0.71	1204	0.83	1290	0.95
1307	2200	785	0.37	841	0.43	894	0.48	944	0.53	992	0.59	1039	0.64	1132	0.77	1220	0.89	1304	1.02
1366	2300	815	0.42	870	0.48	920	0.53	969	0.59	1016	0.65	1061	0.70	1150	0.82	1237	0.96	1319	1.09
1426	2400	846	0.47	899	0.53	948	0.59	995	0.65	1040	0.71	1084	0.77	1170	0.89	1254	1.02	1335	1.16
1485	2500	876	0.53	928	0.59	975	0.65	1021	0.71	1065	0.77	1108	0.83	1191	0.96	1273	1.10	1351	1.24

Performance is for installation Type B & D: Free or ducted inlet, ducted outlet.
Power rating (bhp) does not include transmission losses.
Performance ratings do not include the effects of appurtenances (accessories).

Class I fans are shown in regular face type.
Class II fans are shown in **bold** face type.
Underlined figures indicate maximum static efficiencies.

Forward Curved

122 FCV

Wheel Dia. = 12.25 inches
Outlet Area = 0.86 ft²

Fan Efficiency Grade: FEG71
Max. BHP = 3.21 (RPM÷1000)³

CFM	OV	0.25" SP		0.5" SP		1" SP		1.5" SP		2" SP		2.5" SP		3" SP		3.5" SP		4" SP		4.5" SP		5" SP	
		RPM	BHP	RPM	BHP	RPM	BHP	RPM	BHP	RPM	BHP	RPM	BHP	RPM	BHP	RPM	BHP	RPM	BHP	RPM	BHP	RPM	BHP
688	800	435	0.05																				
860	1000	461	0.08	604	0.13																		
1032	1200	492	0.11	623	0.17																		
1204	1400	530	0.15	649	0.21	853	0.36																
1376	1600	572	0.21	680	0.28	871	0.43	1041	0.60														
1548	1800	620	0.28	714	0.35	894	0.52	1050	0.70														
1720	2000	673	0.37	753	0.44	921	0.62	1071	0.81	1207	1.02												
1892	2200	728	0.47	795	0.55	952	0.74	1095	0.95	1224	1.16	1348	1.40										
2236	2600	842	0.76	891	0.83	1020	1.04	1151	1.27	1271	1.51	1384	1.77	**1490**	**2.03**	**1595**	**2.31**	**1700**	**2.61**				
2580	3000	958	1.14	998	1.21	1100	1.42	1216	1.69	1328	1.95	**1434**	**2.23**	**1534**	**2.52**	**1629**	**2.82**	**1720**	**3.12**	**1811**	**3.44**		
2924	3400	1076	1.63	1111	1.72	1190	1.91	**1292**	**2.20**	**1393**	**2.50**	**1492**	**2.80**	**1586**	**3.11**	**1677**	**3.44**	**1764**	**3.77**	**1847**	**4.10**		
3268	3800	**1196**	**2.27**	**1226**	**2.35**	**1292**	**2.55**	**1374**	**2.83**	**1466**	**3.15**	**1557**	**3.49**	**1647**	**3.83**	**1732**	**4.17**	**1814**	**4.53**				

MAXIMUM RPM: Class I — 1559 Class II — 1871

135 FCV

Wheel Dia. = 13.50 inches
Outlet Area = 1.05 ft²

Fan Efficiency Grade: FEG71
Max. BHP = 3.53 (RPM÷1000)³

CFM	OV	0.25" SP		0.5" SP		1" SP		1.5" SP		2" SP		2.5" SP		3" SP		3.5" SP		4" SP		4.5" SP		5" SP	
		RPM	BHP	RPM	BHP	RPM	BHP	RPM	BHP	RPM	BHP	RPM	BHP	RPM	BHP	RPM	BHP	RPM	BHP	RPM	BHP	RPM	BHP
840	800	406	0.07																				
1050	1000	433	0.10	561	0.16																		
1260	1200	467	0.15	582	0.22																		
1470	1400	507	0.21	610	0.28	792	0.46																
1680	1600	549	0.28	644	0.37	811	0.56																
1890	1800	592	0.37	681	0.47	837	0.68	977	0.90														
2100	2000	636	0.48	721	0.59	866	0.82	998	1.06	1122	1.31												
2310	2200	682	0.62	763	0.74	899	0.98	1024	1.24	1140	1.51	1252	1.79										
2730	2600	777	0.96	849	1.11	973	1.39	1085	1.69	1191	2.00	**1291**	**2.31**	**1387**	**2.63**	**1481**	**2.96**						
3150	3000	877	1.43	939	1.59	1055	1.92	**1156**	**2.25**	**1253**	**2.60**	**1345**	**2.95**	**1433**	**3.31**	**1519**	**3.68**	**1602**	**4.05**	**1683**	**4.42**		
3570	3400	**978**	**2.03**	**1033**	**2.21**	**1141**	**2.59**	**1235**	**2.96**	**1323**	**3.33**	**1408**	**3.72**	**1491**	**4.13**	**1570**	**4.53**	**1647**	**4.94**				
3990	3800	**1080**	**2.78**	**1130**	**2.98**	**1228**	**3.40**	**1319**	**3.82**	**1401**	**4.24**	**1479**	**4.65**	**1556**	**5.09**	**1630**	**5.54**						

MAXIMUM RPM: Class I — 1415 Class II — 1698

150 FCV

Wheel Dia. = 15.00 inches
Outlet Area = 1.29 ft²

Fan Efficiency Grade: FEG67
Max. BHP = 3.93 (RPM÷1000)³

CFM	OV	0.25" SP		0.5" SP		1" SP		1.5" SP		2" SP		2.5" SP		3" SP		3.5" SP		4" SP		4.5" SP		5" SP	
		RPM	BHP	RPM	BHP	RPM	BHP	RPM	BHP	RPM	BHP	RPM	BHP	RPM	BHP	RPM	BHP	RPM	BHP	RPM	BHP	RPM	BHP
1032	800	355	0.08																				
1290	1000	376	0.12	493	0.19																		
1548	1200	402	0.17	509	0.25																		
1806	1400	433	0.23	530	0.32	696	0.53																
2064	1600	467	0.31	555	0.41	711	0.64	850	0.90														
2322	1800	506	0.41	583	0.53	730	0.77	858	1.05														
2580	2000	550	0.55	615	0.66	752	0.93	874	1.22	986	1.53												
2838	2200	595	0.71	649	0.82	777	1.11	894	1.42	1000	1.75	1101	2.09										
3354	2600	688	1.14	728	1.24	833	1.56	940	1.91	1038	2.27	1131	2.66	1217	3.04	**1302**	**3.46**	**1388**	**3.91**				
3870	3000	783	1.71	816	1.82	899	2.14	993	2.53	1085	2.93	1171	3.35	1253	3.79	**1331**	**4.23**	**1405**	**4.68**	**1479**	**5.16**		
4386	3400	879	2.45	907	2.57	972	2.87	1055	3.30	1138	3.75	1219	4.20	**1296**	**4.68**	**1370**	**5.17**	**1441**	**5.66**	**1509**	**6.16**		
4902	3800	977	3.40	1001	3.52	1055	3.82	1122	4.24	1198	4.74	**1272**	**5.23**	**1345**	**5.74**	**1415**	**6.27**	**1482**	**6.80**				

MAXIMUM RPM: Class I — 1273 Class II — 1528

165 FCV

Wheel Dia. = 16.50 inches
Outlet Area = 1.57 ft²

Fan Efficiency Grade: FEG67
Max. BHP = 4.32 (RPM÷1000)³

CFM	OV	0.25" SP		0.5" SP		1" SP		1.5" SP		2" SP		2.5" SP		3" SP		3.5" SP		4" SP		4.5" SP		5" SP	
		RPM	BHP	RPM	BHP	RPM	BHP	RPM	BHP	RPM	BHP	RPM	BHP	RPM	BHP	RPM	BHP	RPM	BHP	RPM	BHP	RPM	BHP
1256	800	324	0.10																				
1570	1000	343	0.14	448	0.23																		
1884	1200	366	0.20	464	0.31																		
2198	1400	395	0.28	483	0.39	634	0.65																
2512	1600	426	0.38	506	0.51	647	0.79	773	1.10														
2826	1800	462	0.51	532	0.65	665	0.95	780	1.27														
3140	2000	502	0.67	561	0.81	685	1.14	796	1.49	897	1.86												
3454	2200	543	0.87	592	1.01	708	1.36	814	1.74	910	2.13	1001	2.55										
4082	2600	628	1.39	664	1.52	760	1.91	856	2.33	946	2.78	1029	3.24	1107	3.71	**1184**	**4.21**	**1262**	**4.76**				
4710	3000	715	2.10	745	2.24	820	2.62	905	3.09	988	3.58	1066	4.09	1141	4.63	**1211**	**5.16**	**1279**	**5.72**	**1345**	**6.29**		
5338	3400	804	3.02	829	3.17	887	3.52	962	4.05	1037	4.59	**1110**	**5.14**	**1180**	**5.71**	**1247**	**6.31**	**1312**	**6.92**	**1373**	**7.52**		
5966	3800	893	4.18	915	4.34	964	4.70	**1024**	**5.20**	**1092**	**5.80**	**1159**	**6.41**	**1225**	**7.02**	**1288**	**7.65**	**1349**	**8.30**				

MAXIMUM RPM: Class I — 1157 Class II — 1389

Performance is for installation Type B & D: Free or ducted inlet, ducted outlet.
Power rating (bhp) does not include transmission losses.
Performance ratings do not include the effects of appurtenances (accessories).

Class I fans are shown in regular face type.
Class II fans are shown in **bold** face type.
Underlined figures indicate maximum static efficiencies.

Forward Curved

182 FCV

Wheel Dia. = 18.25 inches
Outlet Area = 1.92 ft²

Fan Efficiency Grade: FEG71
Max. BHP = 4.78 (RPM÷1000)³

CFM	OV	0.25" SP		0.5" SP		1" SP		1.5" SP		2" SP		2.5" SP		3" SP		3.5" SP		4" SP		4.5" SP		5" SP	
		RPM	BHP	RPM	BHP	RPM	BHP	RPM	BHP	RPM	BHP	RPM	BHP	RPM	BHP	RPM	BHP	RPM	BHP	RPM	BHP	RPM	BHP
1536	800	293	0.11																				
1920	1000	313	0.16	406	0.26																		
2304	1200	339	0.23	421	0.34	566	0.60																
2688	1400	368	0.33	441	0.44	574	0.73																
3072	1600	399	0.46	466	0.58	587	0.88	697	1.22														
3456	1800	432	0.62	494	0.76	605	1.06	708	1.43	804	1.82												
3840	2000	466	0.81	524	0.97	626	1.28	722	1.66	812	2.08	898	2.52										
4224	2200	501	1.04	555	1.22	651	1.56	740	1.93	825	2.37	906	2.84	984	3.33								
4992	2600	572	1.63	620	1.84	706	2.24	785	2.65	861	3.10	934	3.61	1004	4.15	**1072**	**4.71**	**1138**	**5.27**	1203	5.87		
5760	3000	646	2.43	689	2.68	767	3.15	838	3.60	906	4.07	972	4.58	1036	5.14	**1099**	**5.76**	**1159**	**6.38**	**1219**	**7.04**		
6528	3400	721	3.46	760	3.75	831	4.28	897	4.80	959	5.32	1019	5.86	**1078**	**6.44**	**1135**	**7.04**	**1191**	**7.69**	**1246**	**8.39**		
7296	3800	797	4.76	832	5.07	898	5.68	959	6.27	1017	6.85	**1072**	**7.43**	**1126**	**8.03**	**1179**	**8.66**	**1230**	**9.30**				

MAXIMUM RPM: Class I — 1046 Class II — 1256

200 FCV

Wheel Dia. = 20.00 inches
Outlet Area = 2.30 ft²

Fan Efficiency Grade: FEG71
Max. BHP = 5.24 (RPM÷1000)³

CFM	OV	0.25" SP		0.5" SP		1" SP		1.5" SP		2" SP		2.5" SP		3" SP		3.5" SP		4" SP		4.5" SP		5" SP	
		RPM	BHP	RPM	BHP	RPM	BHP	RPM	BHP	RPM	BHP	RPM	BHP	RPM	BHP	RPM	BHP	RPM	BHP	RPM	BHP	RPM	BHP
1840	800	268	0.13																				
2300	1000	286	0.19	371	0.31																		
2760	1200	309	0.28	384	0.41	517	0.72																
3220	1400	335	0.40	402	0.53	523	0.87																
3680	1600	364	0.55	425	0.70	535	1.05	636	1.46														
4140	1800	394	0.74	450	0.90	551	1.26	645	1.70	733	2.18												
4600	2000	424	0.96	477	1.15	571	1.53	659	1.99	741	2.49	819	3.02										
5060	2200	456	1.24	505	1.45	593	1.86	675	2.31	753	2.85	827	3.41	898	3.99								
5980	2600	521	1.95	565	2.20	643	2.67	716	3.17	785	3.71	852	4.32	916	4.97	**978**	**5.64**	**1038**	**6.31**	1097	7.02		
6900	3000	588	2.90	627	3.19	699	3.76	764	4.30	826	4.87	886	5.48	945	6.15	**1002**	**6.88**	**1057**	**7.63**	**1112**	**8.42**		
7820	3400	656	4.12	692	4.47	757	5.11	817	5.72	874	6.35	929	7.00	**982**	**7.67**	**1035**	**8.42**	**1086**	**9.19**	**1136**	**10.02**		
8740	3800	725	5.66	758	6.06	818	6.78	874	7.49	**926**	**8.16**	**977**	**8.87**	**1026**	**9.59**	**1074**	**10.33**	**1122**	**11.14**				

MAXIMUM RPM: Class I — 955 Class II — 1146

222 FCV

Wheel Dia. = 22.25 inches
Outlet Area = 2.85 ft²

Fan Efficiency Grade: FEG71
Max. BHP = 5.83 (RPM÷1000)³

CFM	OV	0.25" SP		0.5" SP		1" SP		1.5" SP		2" SP		2.5" SP		3" SP		3.5" SP		4" SP		4.5" SP		5" SP	
		RPM	BHP	RPM	BHP	RPM	BHP	RPM	BHP	RPM	BHP	RPM	BHP	RPM	BHP	RPM	BHP	RPM	BHP	RPM	BHP	RPM	BHP
2280	800	241	0.16																				
2850	1000	257	0.24	333	0.39																		
3420	1200	278	0.35	345	0.50	465	0.89																
3990	1400	302	0.50	362	0.66	470	1.07																
4560	1600	327	0.68	382	0.86	481	1.30	572	1.81														
5130	1800	354	0.91	405	1.12	496	1.57	580	2.11	659	2.70												
5700	2000	382	1.20	429	1.43	513	1.90	592	2.46	666	3.09	736	3.73										
6270	2200	410	1.54	455	1.80	533	2.30	607	2.87	677	3.53	743	4.22	807	4.94								
7410	2600	469	2.43	508	2.73	579	3.33	644	3.94	706	4.60	766	5.35	823	6.15	**879**	**6.98**	**934**	**7.84**	986	8.69		
8550	3000	529	3.60	564	3.96	629	4.67	687	5.33	743	6.05	797	6.80	850	7.64	**901**	**8.53**	**951**	**9.48**	**999**	**10.42**		
9690	3400	591	5.14	622	5.53	681	6.34	735	7.11	786	7.88	835	8.68	**883**	**9.52**	**930**	**10.41**	**976**	**11.38**	**1021**	**12.41**		
10830	3800	653	7.05	682	7.52	736	8.42	786	9.29	**833**	**10.13**	**878**	**10.98**	**923**	**11.91**	**966**	**12.82**	**1009**	**13.81**				

MAXIMUM RPM: Class I — 858 Class II — 1030

245 FCV

Wheel Dia. = 24.50 inches
Outlet Area = 3.45 ft²

Fan Efficiency Grade: FEG71
Max. BHP = 6.41 (RPM÷1000)³

CFM	OV	0.25" SP		0.5" SP		1" SP		1.5" SP		2" SP		2.5" SP		3" SP		3.5" SP		4" SP		4.5" SP		5" SP	
		RPM	BHP	RPM	BHP	RPM	BHP	RPM	BHP	RPM	BHP	RPM	BHP	RPM	BHP	RPM	BHP	RPM	BHP	RPM	BHP	RPM	BHP
2760	800	218	0.20																				
3450	1000	233	0.29	302	0.47																		
4140	1200	252	0.42	313	0.61	422	1.08																
4830	1400	274	0.60	328	0.79	427	1.30																
5520	1600	297	0.82	347	1.05	437	1.57	519	2.19														
6210	1800	321	1.10	367	1.35	450	1.89	527	2.56	598	3.26												
6900	2000	346	1.45	389	1.72	466	2.30	538	2.98	605	3.74	669	4.53										
7590	2200	372	1.86	413	2.18	484	2.78	551	3.47	614	4.26	675	5.11	733	5.99								
8970	2600	425	2.92	461	3.30	525	4.01	584	4.75	641	5.57	695	6.46	748	7.46	**798**	**8.44**	**848**	**9.49**	896	10.54		
10350	3000	480	4.35	512	4.79	570	5.62	623	6.43	674	7.30	724	8.24	771	9.21	**818**	**10.32**	**863**	**11.46**	**907**	**12.60**		
11730	3400	536	6.20	564	6.68	618	7.66	667	8.59	713	9.51	**758**	**10.49**	**802**	**11.53**	**845**	**12.63**	**886**	**13.77**	**927**	**15.02**		
13110	3800	592	8.50	618	9.06	**667**	**10.14**	**713**	**11.21**	**756**	**12.25**	**797**	**13.28**	**838**	**14.41**	**877**	**15.51**	**916**	**16.71**				

MAXIMUM RPM: Class I — 780 Class II — 935

Performance is for installation Type B & D: Free or ducted inlet, ducted outlet.
Power rating (bhp) does not include transmission losses.
Performance ratings do not include the effects of appurtenances (accessories).

Class I fans are shown in regular face type.
Class II fans are shown in **bold** face type.
Underlined figures indicate maximum static efficiencies.

Forward Curved

270 FCV

Wheel Dia. = 27.00 inches
Outlet Area = 4.19 ft²

Fan Efficiency Grade: FEG71
Max. BHP = 7.07 (RPM÷1000)³

CFM	OV	0.25" SP		0.5" SP		1" SP		1.5" SP		2" SP		2.5" SP		3" SP		3.5" SP		4" SP		4.5" SP		5" SP	
		RPM	BHP	RPM	BHP	RPM	BHP	RPM	BHP	RPM	BHP	RPM	BHP	RPM	BHP	RPM	BHP	RPM	BHP	RPM	BHP	RPM	BHP
3352	800	191	0.23																				
4190	1000	203	0.33	265	0.54																		
5028	1200	219	0.47	273	0.70																		
5866	1400	237	0.66	286	0.91	375	1.51																
6704	1600	257	0.90	301	1.18	382	1.81	456	2.52														
7542	1800	278	1.20	318	1.50	392	2.17	462	2.96	525	3.75												
8380	2000	301	1.59	337	1.91	406	2.63	470	3.44	531	4.32	587	5.21										
9218	2200	324	2.04	357	2.38	421	3.16	480	3.98	538	4.93	593	5.92	643	6.87								
10894	2600	371	3.21	400	3.61	455	4.46	508	5.40	558	6.38	607	7.45	655	8.60	701	9.77	**744**	**10.91**				
12570	3000	419	4.77	445	5.24	493	6.16	541	7.22	587	8.33	630	9.43	**673**	**10.63**	**715**	**11.90**	**756**	**13.21**	**796**	**14.55**	**834**	**15.87**
14246	3400	469	6.83	492	7.34	535	8.36	577	9.46	**620**	**10.74**	**660**	**11.97**	**698**	**13.19**	**736**	**14.50**	**773**	**15.85**	**810**	**17.29**	**847**	**18.82**
15922	3800	519	9.39	539	9.92	**579**	**11.10**	**617**	**12.29**	**655**	**13.58**	**693**	**14.99**	**729**	**16.37**	**763**	**17.70**	**797**	**19.12**	**831**	**20.61**		

MAXIMUM RPM: Class I — 707 Class II — 849

300 FCV

Wheel Dia. = 30.00 inches
Outlet Area = 5.17 ft²

Fan Efficiency Grade: FEG71
Max. BHP = 7.85 (RPM÷1000)³

CFM	OV	0.25" SP		0.5" SP		1" SP		1.5" SP		2" SP		2.5" SP		3" SP		3.5" SP		4" SP		4.5" SP		5" SP	
		RPM	BHP	RPM	BHP	RPM	BHP	RPM	BHP	RPM	BHP	RPM	BHP	RPM	BHP	RPM	BHP	RPM	BHP	RPM	BHP	RPM	BHP
4136	800	172	0.28																				
5170	1000	183	0.41	239	0.67																		
6204	1200	197	0.58	246	0.86																		
7238	1400	213	0.81	257	1.12	337	1.85																
8272	1600	231	1.11	271	1.46	344	2.24	410	3.11														
9306	1800	250	1.48	286	1.85	353	2.69	416	3.65	473	4.64												
10340	2000	271	1.96	303	2.34	365	3.24	423	4.24	478	5.33	528	6.41										
11374	2200	291	2.51	321	2.93	379	3.90	432	4.91	484	6.07	533	7.27	579	8.49								
13442	2600	334	3.97	359	4.42	410	5.53	457	6.66	502	7.87	546	9.18	**589**	**10.58**	**631**	**12.06**	**670**	**13.48**				
15510	3000	377	5.88	400	6.44	444	7.62	487	8.92	**528**	**10.27**	**567**	**11.64**	**605**	**13.07**	**643**	**14.65**	**681**	**16.35**	**717**	**18.00**	**751**	**19.62**
17578	3400	422	8.42	442	9.01	**481**	**10.29**	**519**	**11.66**	**557**	**13.18**	**594**	**14.77**	**628**	**16.26**	**662**	**17.86**	**696**	**19.58**	**729**	**21.34**	**762**	**23.20**
19646	3800	**467**	**11.58**	**485**	**12.24**	**521**	**13.69**	**555**	**15.14**	**589**	**16.72**	**623**	**18.44**	**656**	**20.19**	**687**	**21.87**	**717**	**23.56**	**748**	**25.45**		

MAXIMUM RPM: Class I — 637 Class II — 764

330 FCV

Wheel Dia. = 33.00 inches
Outlet Area = 6.26 ft²

Fan Efficiency Grade: FEG71
Max. BHP = 8.64 (RPM÷1000)³

CFM	OV	0.25" SP		0.5" SP		1" SP		1.5" SP		2" SP		2.5" SP		3" SP		3.5" SP		4" SP		4.5" SP		5" SP	
		RPM	BHP	RPM	BHP	RPM	BHP	RPM	BHP	RPM	BHP	RPM	BHP	RPM	BHP	RPM	BHP	RPM	BHP	RPM	BHP	RPM	BHP
5008	800	156	0.34																				
6260	1000	166	0.49	217	0.80																		
7512	1200	179	0.70	224	1.05																		
8764	1400	194	0.99	234	1.36	307	2.25																
10016	1600	210	1.34	247	1.78	312	2.69	373	3.77														
11268	1800	228	1.81	261	2.27	321	3.25	378	4.42	430	5.62												
12520	2000	246	2.36	276	2.86	332	3.93	384	5.11	434	6.43	480	7.76										
13772	2200	265	3.05	292	3.56	345	4.74	393	5.96	440	7.35	485	8.83	526	10.26								
16276	2600	304	4.82	327	5.38	372	6.65	416	8.10	457	9.56	497	11.15	536	12.85	574	14.63	**609**	**16.32**				
18780	3000	343	7.13	364	7.81	403	9.18	443	10.82	480	12.43	515	14.05	550	15.83	**585**	**17.78**	**619**	**19.78**	**652**	**21.81**	**683**	**23.78**
21284	3400	384	10.22	402	10.92	438	12.52	472	14.13	507	16.02	540	17.88	571	19.69	**602**	**21.64**	**633**	**23.74**	**663**	**25.87**	**693**	**28.12**
23788	3800	425	14.06	441	14.82	474	16.60	505	18.38	**536**	**20.30**	**567**	**22.40**	**596**	**24.40**	**625**	**26.54**	**652**	**28.55**	**680**	**30.81**		

MAXIMUM RPM: Class I — 579 Class II — 694

365 FCV

Wheel Dia. = 36.50 inches
Outlet Area = 7.66 ft²

Fan Efficiency Grade: FEG71
Max. BHP = 9.56 (RPM÷1000)³

CFM	OV	0.25" SP		0.5" SP		1" SP		1.5" SP		2" SP		2.5" SP		3" SP		3.5" SP		4" SP		4.5" SP		5" SP	
		RPM	BHP	RPM	BHP	RPM	BHP	RPM	BHP	RPM	BHP	RPM	BHP	RPM	BHP	RPM	BHP	RPM	BHP	RPM	BHP	RPM	BHP
6128	800	141	0.41																				
7660	1000	150	0.60	196	0.98																		
9192	1200	162	0.86	202	1.28																		
10724	1400	175	1.20	211	1.66	277	2.74																
12256	1600	190	1.65	223	2.16	283	3.33	337	4.60														
13788	1800	206	2.21	236	2.78	290	3.97	342	5.42	389	6.89												
15320	2000	223	2.92	249	3.47	300	4.80	347	6.25	393	7.91	434	9.50										
16852	2200	240	3.75	264	4.35	312	5.81	355	7.28	398	9.01	438	10.77	476	12.59								
19916	2600	275	5.90	296	6.61	337	8.19	376	9.90	413	11.69	449	13.62	484	15.67	519	17.90	**550**	**19.91**				
22980	3000	310	8.72	329	9.55	365	11.29	400	13.18	434	15.21	466	17.24	498	19.46	**529**	**21.76**	**559**	**24.12**	**589**	**26.63**	**617**	**29.03**
26044	3400	347	12.48	364	13.42	396	15.32	427	17.32	458	19.55	**488**	**21.85**	**516**	**24.06**	**544**	**26.44**	**572**	**29.00**	**600**	**31.74**	**627**	**34.49**
29108	3800	384	17.17	399	18.17	**428**	**20.24**	**456**	**22.40**	**484**	**24.75**	**512**	**27.30**	**539**	**29.88**	**565**	**32.46**	**590**	**35.02**	**615**	**37.73**		

MAXIMUM RPM: Class I — 523 Class II — 628

Performance is for installation Type B & D: Free or ducted inlet, ducted outlet.
Power rating (bhp) does not include transmission losses.
Performance ratings do not include the effects of appurtenances (accessories).

Class I fans are shown in regular face type.
Class II fans are shown in **bold** face type.
Underlined figures indicate maximum static efficiencies.

DDF

MODEL NO.	MOTOR HP	RPM	0.125" SP		0.25" SP		0.375" SP		0.5" SP		0.625" SP		0.75" SP		1" SP	
			CFM	OV	CFM	OV	CFM	OV	CFM	OV	CFM	OV	CFM	OV	CFM	OV
DDF60L	1/6	1150	324	1466	254	1149	—	—	—	—	—	—	—	—	—	—
DDF60H	1/6	1750	545	2466	506	2290	464	2100	421	1905	362	1638	292	1321	—	—
DDF75L	1/6	1150	668	2264	586	1986	516	1749	447	1515	—	—	—	—	—	—
DDF75M	1/3	1750	—	—	—	—	—	—	—	—	874	2963	828	2807	741	2512
DDF75H	1/2	1750	1085	3678	1033	3502	978	3315	923	3129	874	2963	828	2807	741	2512
DDF90L	1/3	1150	—	—	1216	2916	1129	2707	1042	2499	946	2269	802	1923	—	—
DDF90M	1/2	1150	1300	3118	1216	2916	1129	2707	1042	2499	946	2269	802	1923	—	—
DDF90J	1½	1750	2048	4911	1994	4782	1940	4652	1886	4523	1830	4388	1772	4249	1657	3974
DDF105L	1	1150	2127	3648	2036	3492	1945	3336	1855	3182	1766	3029	1681	2883	1484	2545

MODEL NO.	MOTOR HP	RPM	1" SP		1.25" SP		1.5" SP		1.75" SP	
			CFM	OV	CFM	OV	CFM	OV	CFM	OV
DDF90H	1	1750	—	—	1543	3700	1408	3376	1205	2890
DDF90J	1½	1750	1657	3974	1543	3700	1408	3376	1205	2890

Model DDF is not licensed to bear the AMCA Seal.

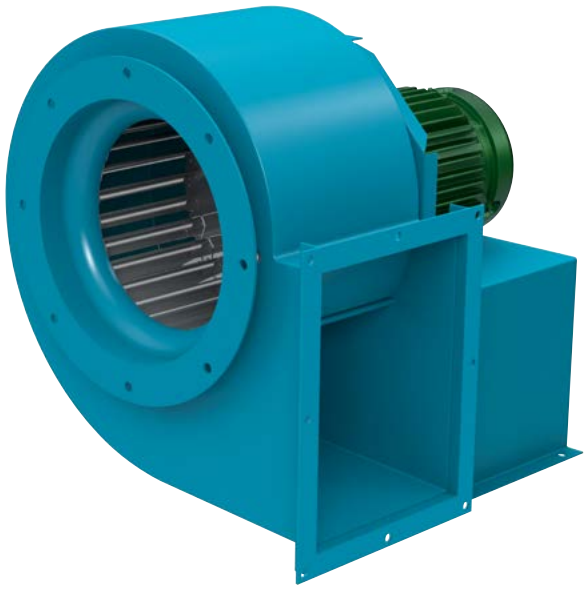

Fan & Blower Twin City

DCV

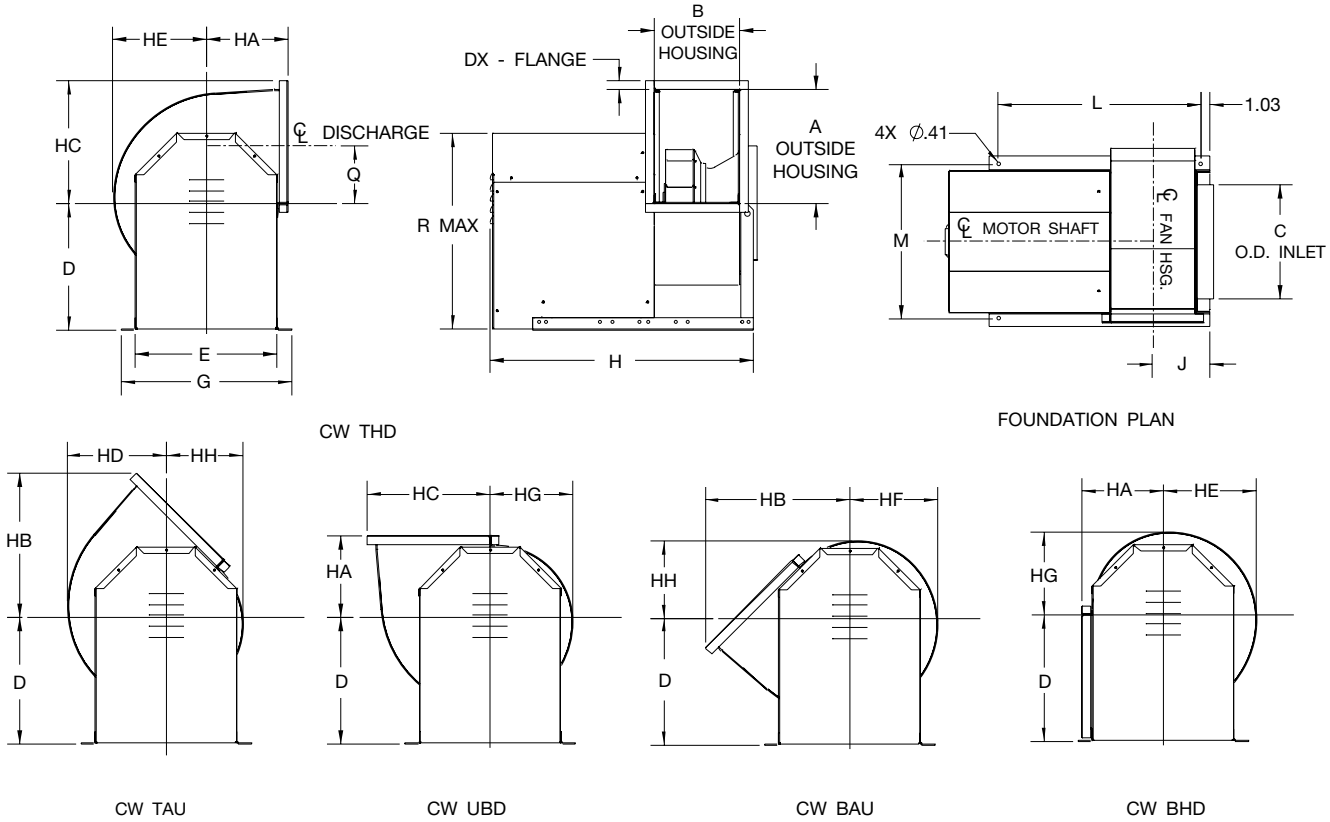

SIZE	A	B	C	D	DX	E	G	H	HA	HB	HC	HD	HE	HF	HG	HH	J	L	M	Q	R
90-105	11.24	8.59	11.13	14.5	1.00	16.18	19.50	28.55	9.06	15.07	12.24	9.74	9.17	8.64	8.10	7.57	5.92	21.44	17.75	5.61	22.43
122	13.05	9.72	13.13	14.5	1.00	16.18	19.50	30.18	9.31	16.52	14.05	11.34	10.67	10.04	9.42	8.79	6.49	23.13	17.75	6.52	22.43
135	14.37	10.78	14.25	15.75	1.00	17.68	21.00	31.24	10.31	18.16	15.37	12.47	11.73	11.04	10.35	9.67	7.02	24.19	19.25	7.18	24.43
150	15.93	11.90	15.75	17.75	1.00	19.18	22.50	33.43	11.50	20.10	16.93	13.79	12.98	12.23	11.48	10.73	7.58	26.38	20.75	7.96	27.18
165	17.49	13.15	17.50	19.00	1.00	20.68	24.00	34.68	12.69	22.05	18.49	15.11	14.23	13.42	12.60	11.79	8.20	27.63	22.25	8.74	29.18
182	19.43	14.53	19.25	21.00	1.25	22.68	26.00	36.06	14.06	24.57	20.68	16.80	15.79	14.85	13.92	12.98	8.89	29.01	24.25	9.71	32.18
200	21.24	15.90	21.31	22.75	1.25	25.18	28.50	38.43	15.37	26.78	22.49	18.55	17.42	16.35	15.29	14.23	9.58	31.38	26.75	10.61	35.18

33370140C

DIMENSIONS ARE SUBJECT TO CHANGE. CERTIFIED DRAWINGS AVAILABLE UPON REQUEST.

FCV (Sizes 75 & 90)

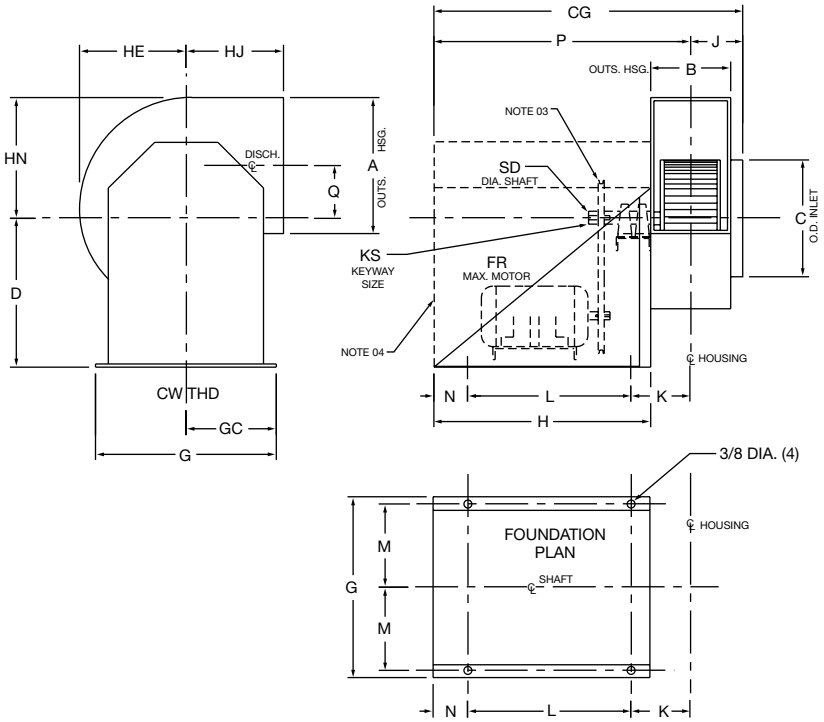

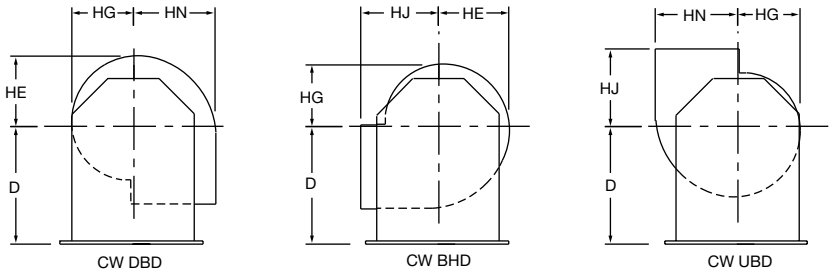

NOTES:
1. Housing sides and scroll are 14 GA.
2. 'CW' rotation is shown. 'CCW' rotation is similar but opposite.
3. Package includes adjustable speed v-belt drive.
4. Optional weather cover shown.
5. Optional inlet screens per AS15506.

SIZE	A	B	C	CG	D	FR	G	GC	H	HE	HG
75	8.50	5.00	7.50	25.19	13.00	56	12.25	6.13	18.88	6.56	5.81
90	10.00	6.00	9.00	26.19	13.00	56	14.00	7.00	18.88	8.00	6.81

SIZE	HJ	HN	J	K	KS	L	M	N	P	Q	SD
75	6.13	7.88	3.56	3.69	.19 x .09	14.75	5.63	3.06	21.63	3.63	0.625
90	7.00	9.25	4.06	4.19	.19 x .09	14.75	6.50	3.06	22.13	4.25	0.625

AC10748B

DIMENSIONS ARE SUBJECT TO CHANGE. CERTIFIED DRAWINGS AVAILABLE UPON REQUEST.

FCV (Size 105)
BCV (Class I & II, Sizes 90 – 105)

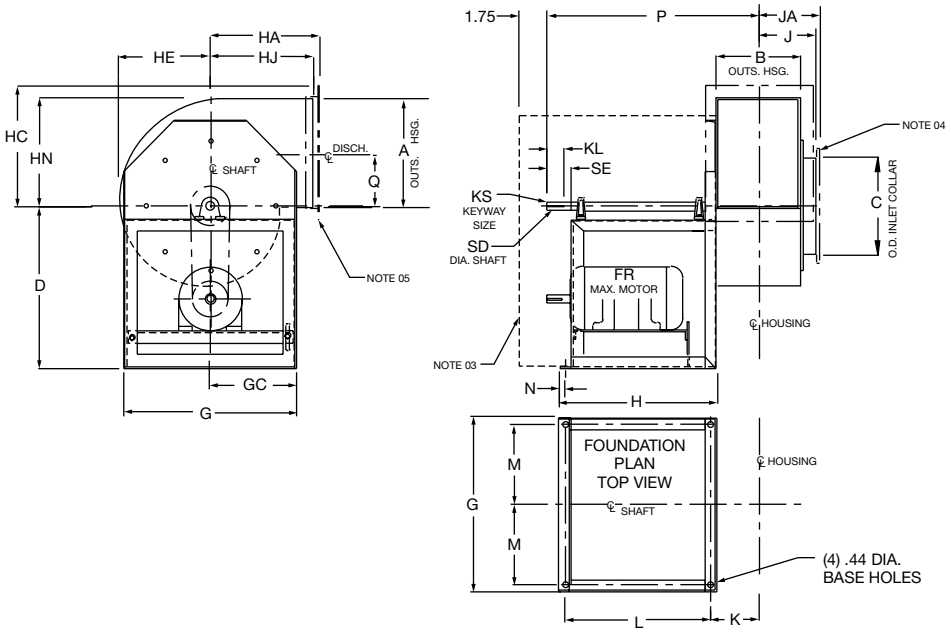

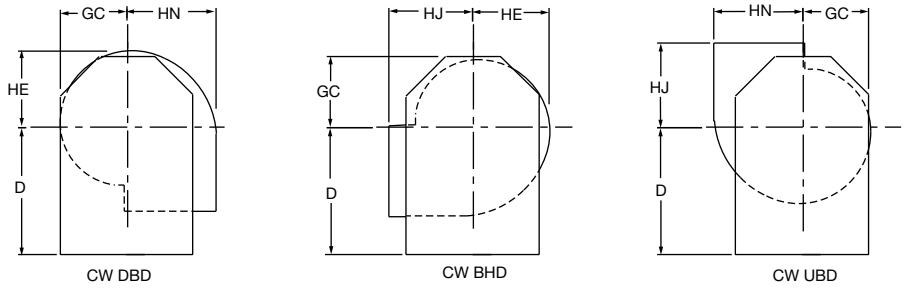

NOTES:
1. Housing sides and scroll are 14 GA.
2. 'CW' rotation is shown. 'CCW' rotation is similar but opposite.
3. Optional weather cover shown.
4. Optional inlet flange per AS12403 (FCV).
5. Optional discharge flange per AC14986 (BCV) & AS11741 (FCV).
6. Optional inlet screens per AS15506.

SIZE	A	B	C	D	FR	G	GC	H	HA	HC	HE	HJ	HN
90 BCV	11.19	8.63	10.75	14.50	145T	16	8	13.44	9.50	12.13	9.06	9	11.13
105 BCV	11.19	8.63	10.75	14.50	145T	16	8	13.44	9.50	12.13	9.06	9	11.13
105 FCV	12.00	7.00	10.50	14.50	145T	16	8	13.44	9.50	11.56	9.38	9	10.56

SIZE	J	JA	K	KL	KS	L	M	N	P	Q	SD	SE
90 BCV	5.38	5.50	5.19	2	.25 x .13	12	6.75	0.56	19.19	5.53	1.00	2.75
105 BCV	5.38	5.50	5.19	2	.25 x .13	12	6.75	0.56	19.19	5.53	1.00	2.75
105 FCV	4.56	4.69	4.38	2	.25 x .13	12	6.75	0.56	18.38	4.56	1.00	2.75

AC13485E

DIMENSIONS ARE SUBJECT TO CHANGE. CERTIFIED DRAWINGS AVAILABLE UPON REQUEST.

BCV (Class L)

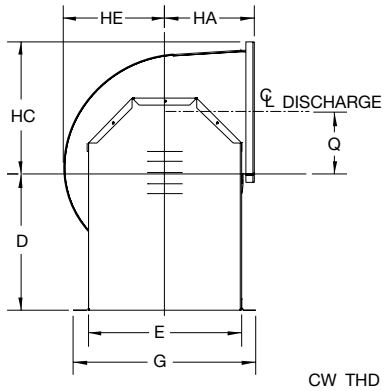

CW THD

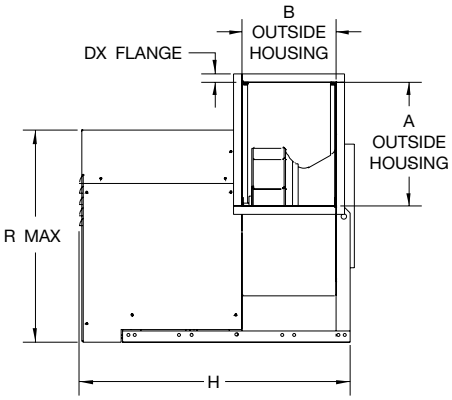

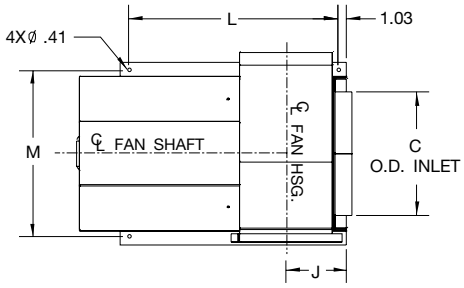

FOUNDATION PLAN

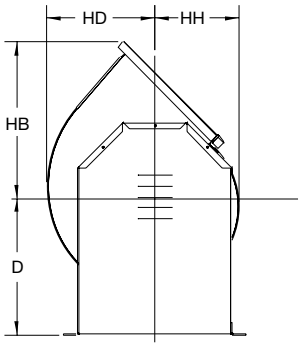

CW TAU

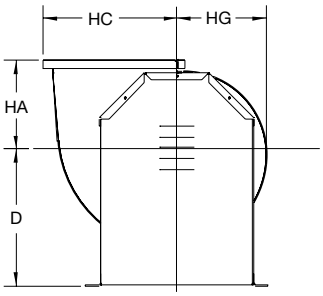

CW UBD

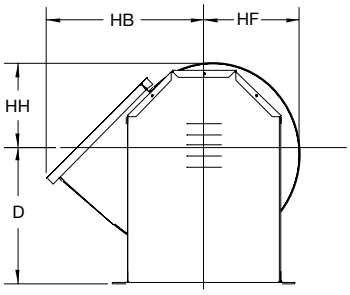

CW BAU

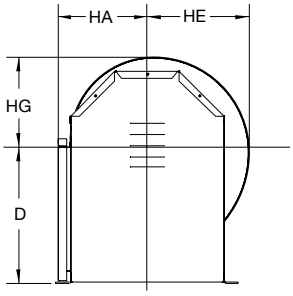

CW BHD

SIZE	A	B	C	D	DX	E	FR	G	H	HA	HB	HC	HD	HE	HF	HG	HH	J	L	M	Q	R
90-105	11.24	8.59	11.13	14.50	1.00	16.18	56	19.50	28.55	9.06	15.07	12.24	9.74	9.17	8.64	8.10	7.57	5.95	21.50	17.75	5.61	22.43
122	13.05	9.72	13.13	14.50	1.00	16.18	143T	19.50	30.18	9.31	16.52	14.05	11.34	10.67	10.04	9.42	8.79	6.49	23.13	17.75	6.52	22.43
135	14.37	10.78	14.25	15.75	1.00	17.68	143T	21.00	31.24	10.31	18.16	15.37	12.47	11.73	11.04	10.35	9.67	7.02	24.19	19.25	7.18	24.43
150	15.93	11.90	15.75	17.75	1.00	19.18	145T	22.50	33.43	11.50	20.10	16.93	13.79	12.98	12.23	11.48	10.73	7.58	26.38	20.75	7.96	27.18
165	17.49	13.15	17.50	19.00	1.00	20.68	145T	24.00	34.68	12.69	22.05	18.49	15.11	14.23	13.42	12.60	11.79	8.20	27.63	22.25	8.74	29.18
182	19.43	14.53	19.25	21.00	1.25	22.68	145T	26.00	36.06	14.06	24.57	20.68	16.80	15.79	14.85	13.92	12.98	8.89	29.01	24.25	9.71	32.18
200	21.24	15.90	21.31	22.75	1.25	25.18	182T	28.50	38.43	15.38	26.78	22.49	18.55	17.42	16.35	15.29	14.23	9.58	31.38	26.75	10.61	35.18
222	23.62	17.59	23.94	25.50	1.25	27.43	184T	31.75	41.68	17.25	29.78	24.87	20.39	19.17	18.04	16.92	15.79	10.42	34.63	29.75	11.80	39.06
245	25.99	19.34	26.00	28.00	1.25	29.93	184T	34.25	43.44	19.06	32.74	27.24	22.45	21.10	19.85	18.60	17.35	11.31	36.39	32.25	12.99	42.81
270	28.68	21.28	28.38	30.50	1.50	33.18	184T	37.50	45.38	21.00	36.19	30.18	24.78	23.29	21.92	20.54	19.17	12.28	38.33	35.50	14.33	46.93

33370142B

DIMENSIONS ARE SUBJECT TO CHANGE. CERTIFIED DRAWINGS AVAILABLE UPON REQUEST.

BCV (Class I & II, Sizes 122 – 365)

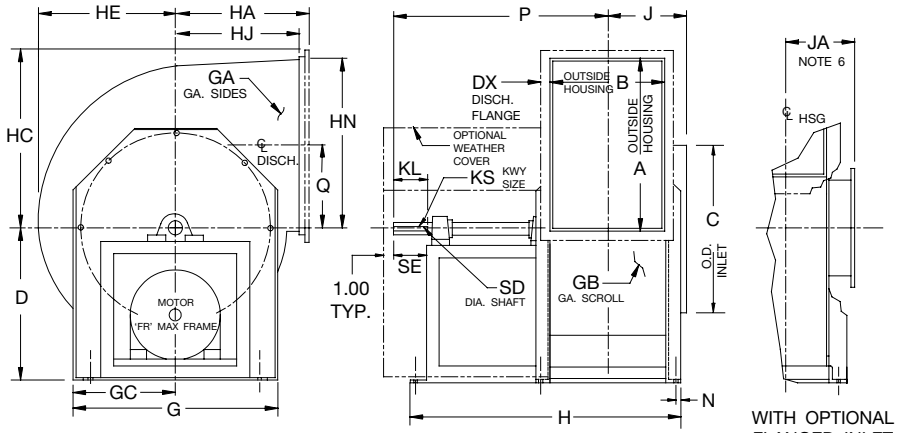

CW THD

WITH OPTIONAL FLANGED INLET

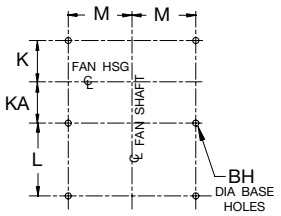

FOUNDATION PLAN

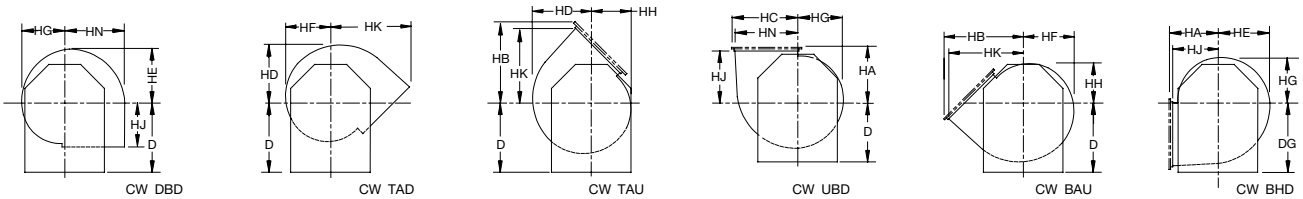

CW DBD CW TAD CW TAU CW UBD CW BAU CW BHD

NOTES:

1. Flanged outlet is optional on Sizes 122-200. Flanged outlet is standard on Sizes 222-365 (except on TAD & DBD).
2. 'CW' rotation is shown. 'CCW' rotation is similar but opposite.
3. *Shaft diameter is increased to 1.187 on Hi-temp. fans which require shaft coolers.
4. All units are rotatable to all positions (except Sizes 300-365 with "D" centerline height are not rotatable to BHD).
5. 'FL' is NEMA 'C' max motor length.
6. Optional inlet flange punching per AS363.

SIZE	A	B	BH	C	D		DG		DX	FL	FR	G	GA	GB	GC	H		HA	HB	HC	HD	HE	HF	HG
					CL I	CL II	CL I	CL II								CL I	CL II							
122	13.00	9.75	0.44	13.13	14.50	17.63	14.50	17.63	1.00	14.75	145T	16.00	14	14	8.00	24.50	32.00	9.75	16.75	13.94	11.19	10.56	9.94	9.31
135	14.31	10.81	0.44	14.25	15.75	19.13	15.75	19.13	1.00	14.75	145T	17.50	14	14	8.75	25.63	34.81	10.75	18.38	15.25	12.31	11.63	10.94	10.25
150	15.88	11.94	0.44	15.75	17.75	19.38	17.75	19.38	1.00	17.00	184T	19.00	14	14	9.50	28.75	36.00	11.94	20.31	16.81	13.75	12.88	12.13	11.38
165	17.44	13.19	0.44	17.50	19.00	19.38	19.00	19.38	1.00	17.00	184T	20.50	14	14	10.25	30.13	37.31	13.13	22.25	18.38	15.06	14.13	13.31	12.50
182	19.38	14.56	0.44	19.25	21.00	21.88	21.00	21.88	1.25	20.50	215T	22.50	12	14	11.25	34.38	43.44	14.50	24.81	20.56	16.69	15.69	14.75	13.81
200	21.19	15.94	0.56	21.31	22.75	22.75	22.75	22.75	1.25	20.50	215T	25.00	12	14	12.50	35.75	44.81	15.81	27.00	22.38	18.38	17.31	16.25	15.19
222	23.56	17.69	0.56	23.94	25.50	25.50	25.50	25.50	1.25	18.75	215T	27.25	12	14	13.63	40.75	47.13	17.69	30.00	24.75	20.44	19.06	17.94	16.81
245	25.94	19.44	0.56	26.00	28.00	28.00	28.00	28.00	1.25	19.75	215T	29.75	12	14	14.88	43.50	48.81	19.50	33.00	27.13	22.38	21.00	19.75	18.50
270	28.63	21.38	0.56	28.25	30.50	30.50	30.50	30.50	1.50	21.75	215T	33.00	12	14	16.50	47.38	53.00	21.44	36.44	30.06	24.69	23.19	21.81	20.44
300	31.81	23.81	0.56	31.63	27.50	27.50	34.25	34.25	1.50	24.50	215T	36.13	10	12	18.06	52.88	56.00	23.81	40.31	33.25	27.44	25.75	24.25	22.75
330	35.13	26.06	0.56	34.75	30.00	30.00	37.25	37.25	1.50	26.00	256T	38.88	10	12	19.44	56.13	61.75	26.25	44.44	36.56	30.13	28.38	26.69	25.00
365	38.75	28.88	0.56	38.50	33.50	33.50	41.00	41.00	1.50	32.25	286T	43.75	10	12	21.88	64.56	64.56	29.00	48.88	40.13	33.50	31.50	29.63	27.75

SIZE	HH	HJ	HK	HN	J	JA	K	KA	KL	KS		L		M	N	P		Q	SD		SE		MAX. MTR.	
										CL I	CL II	CL I	CL II			CL I	CL II		CL I	CL II	CL I	CL II	CL I	CL II
122	8.69	9.25	15.69	12.94	7.44	11.44	5.75	5.75	2.00	.25x.13	.25x.13	12.00	18.50	6.75	0.50	19.75	26.50	6.44	1.000	1.187	2.75	2.75	145T	184T
135	9.56	10.25	17.31	14.25	8.00	12.00	6.31	6.31	2.00	.25x.13	.25x.13	12.00	20.25	7.38	0.50	20.31	29.56	7.13	1.000	1.187	2.75	3.38	145T	215T
150	10.63	11.44	19.25	15.81	9.06	12.56	6.88	6.88	2.50	.25x.13	.25x.13	13.88	20.25	8.25	0.50	23.13	30.13	7.88	1.000	1.187	3.25	3.38	184T	215T
165	11.69	12.63	21.19	17.38	9.69	13.19	7.50	7.50	2.50	.25x.13	.25x.13	13.88	20.00	8.75	0.63	23.75	30.75	8.69	1.000*	1.187	3.25	3.38	184T	215T
182	12.88	14.00	23.56	19.31	10.88	13.94	8.19	8.19	3.00	.25x.13	.38x.19	16.75	24.75	9.63	0.63	27.94	36.81	9.63	1.187	1.437	3.75	4.00	215T	256T
200	14.13	15.31	25.75	21.13	11.56	14.63	8.88	8.88	3.00	.38x.19	.38x.19	16.75	24.63	10.63	0.63	28.63	37.50	10.56	1.437	1.437	3.75	4.00	215T	256T
222	15.69	17.19	28.75	23.50	12.44	15.50	10.00	10.00	3.00	.38x.19	.38x.19	19.00	23.88	11.13	0.88	27.63	38.38	11.75	1.437	1.437	3.75	4.00	215T	256T
245	17.25	19.00	31.75	25.88	13.31	16.38	10.88	10.88	3.00	.38x.19	.38x.19	20.00	23.88	11.63	0.88	29.00	39.25	12.94	1.437	1.687	3.75	4.00	215T	256T
270	19.06	20.94	35.00	28.56	14.25	17.31	11.81	11.81	3.25	.38x.19	.38x.19	22.00	26.13	13.13	0.88	31.69	43.13	14.25	1.437	1.687	4.00	4.63	215T	286T
300	21.25	23.31	38.94	31.75	15.50	15.50	13.31	13.31	3.00	.50x.25	.50x.25	24.00	25.38	12.13	1.13	40.38	44.44	15.81	1.937	1.937	3.75	4.63	215T	286T
330	23.31	25.75	43.00	35.06	16.63	16.63	14.44	14.44	3.00	.50x.25	.50x.25	25.00	28.88	12.13	1.13	42.50	49.69	17.50	1.937	2.187	3.75	5.25	256T	326T
365	25.88	28.50	47.44	39.63	18.00	18.00	15.81	17.63	4.00	.50x.25	.63x.31	28.88	28.88	14.13	1.13	50.56	51.06	19.25	1.937	2.437	4.75	5.25	286T	326T

AC9260N

DIMENSIONS ARE NOT TO BE USED FOR CONSTRUCTION. CERTIFIED DRAWINGS AVAILABLE UPON REQUEST.

BCV (Class I & II, Sizes 402 – 600)

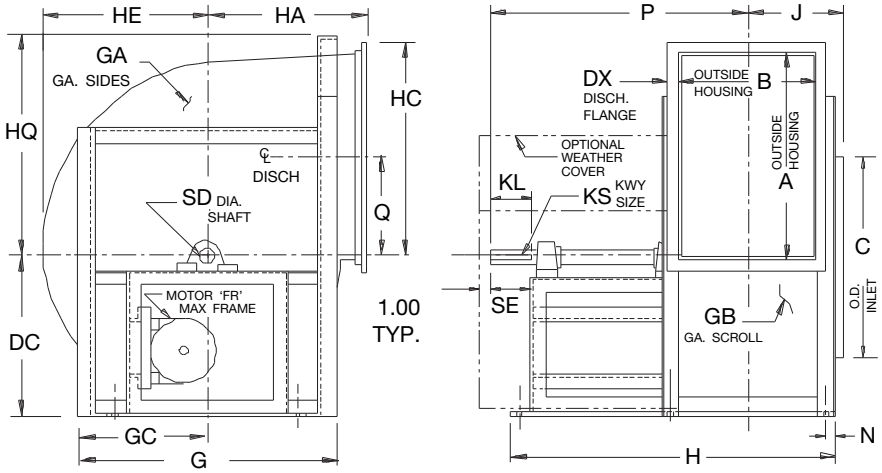

CW THD

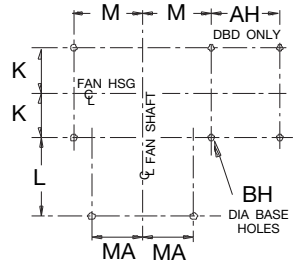

FOUNDATION PLAN

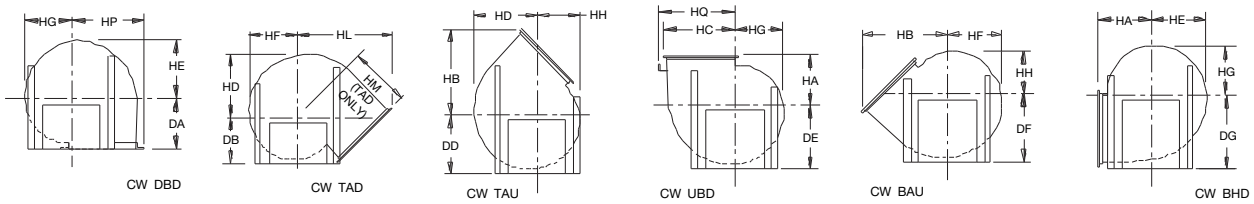

NOTES:

1. Discharge angles are included on all discharges.
2. 'CW' rotation is shown. 'CCW' rotation is similar but opposite.
3. Frame supports vary in construction by size and by discharge position.
4. 'FL' is NEMA 'C' max motor length.

SIZE	A	AH	B	BA	BH	C	DA	DB	DC	DD	DE	DF	DG	DX	FL	FR	G	GA	GB	GC	H	HA	HB	HC
402	42.63	23.31	31.81	3.0x3.0	0.81	42.44	32.00	31.75	33.00	35.25	37.00	39.50	45.50	1.50	29.75	286T	52.50	10	12	26.25	67.88	32.00	53.81	44.06
445	47.13	25.81	35.19	3.0x3.0	0.81	46.88	35.38	36.25	35.50	38.50	40.00	43.25	50.00	1.50	29.75	286T	56.50	10	12	28.25	71.25	35.38	59.38	48.56
490	51.94	28.13	38.63	3.0x3.0	0.81	51.63	39.00	38.75	39.00	42.25	44.00	47.50	54.75	2.00	29.75	326T	61.50	10	12	30.75	74.63	39.00	65.69	53.88
542	57.38	31.81	42.88	3.0x4.0	0.81	57.13	43.06	42.25	43.50	46.50	49.00	52.25	60.25	2.00	35.75	365T	67.00	10	12	33.50	86.88	43.06	72.38	59.31
600	63.50	34.94	47.31	3.0x4.0	0.81	63.13	47.69	45.00	48.00	51.25	54.00	57.50	66.25	2.00	35.75	365T	73.00	10	12	36.50	91.38	47.69	80.00	65.44

SIZE	HD	HE	HF	HG	HH	HL	HM	HP	HQ	J	K	KL	KS		L	M	MA	N	P	Q	SD		SE
													CL I	CL II							CL I	CL II	
402	37.00	34.69	32.63	30.56	28.50	60.50	41.56	45.56	–	20.00	17.56	3.50	.50x.25	.63x.31	30.00	20.88	13.63	1.38	45.19	21.25	2.187	2.437	4.25
445	40.88	38.25	36.00	33.75	31.50	65.69	44.38	50.06	–	21.69	19.25	3.50	.63x.31	.63x.31	30.00	22.88	13.63	1.38	47.13	23.50	2.437	2.687	4.50
490	44.88	42.19	39.69	37.19	34.69	72.31	48.44	54.88	–	23.38	20.94	3.50	.63x.31	.75x.38	30.00	25.38	13.63	1.38	48.81	25.88	2.687	2.937	4.50
542	49.75	46.69	43.94	41.19	38.44	78.88	52.31	61.31	59.75	26.50	23.56	4.25	.75x.38	.88x.44	36.00	27.63	16.13	1.88	56.94	28.83	2.937	3.437	5.50
600	55.00	51.69	48.63	45.56	42.50	86.25	56.56	67.44	65.75	28.75	25.81	4.25	.75x.38	.88x.44	36.00	30.63	16.13	1.88	59.19	31.69	2.937	3.437	5.50

AC9261H

DIMENSIONS ARE NOT TO BE USED FOR CONSTRUCTION. CERTIFIED DRAWINGS AVAILABLE UPON REQUEST.

DDF (Sizes 60, 75, 90, 105)

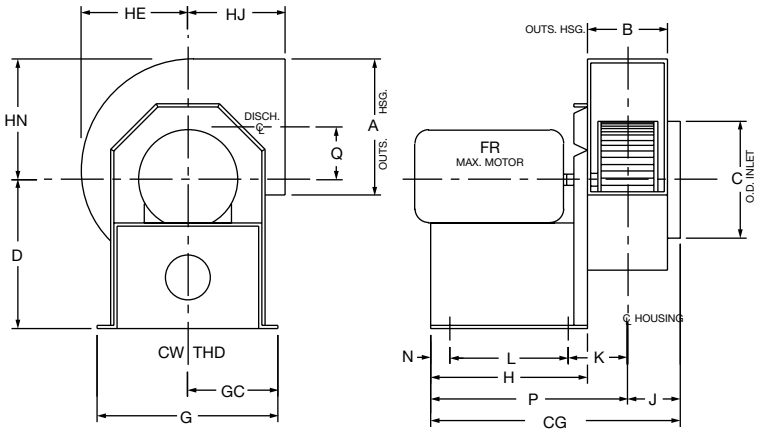

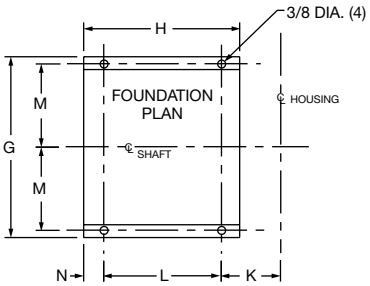

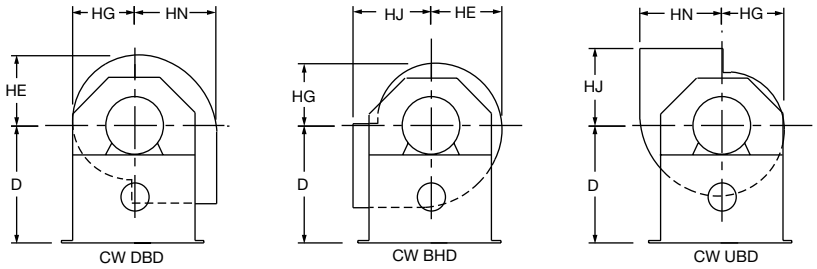

NOTES:
1. Housing sides and scroll are 14 GA.
2. 'CW' rotation is shown. 'CCW' rotation is similar but opposite.
3. Optional inlet screens per AS15506B.

SIZE	A	B	C	CG	D	FR	G	GC	H	HE
60	7.50	4.25	6.00	13.38	8.13	56	9.75	4.88	8.00	5.50
75	8.50	5.00	7.50	14.13	9.75	56	11.25	5.63	8.00	6.56
90	10.00	6.00	9.00	18.13	10.50	145T	12.63	6.31	11.00	8.00
105	12.00	7.00	10.50	20.13	12.63	145T	15.88	7.94	11.00	9.38

SIZE	HG	HJ	HN	J	K	L	M	N	P	Q
60	4.75	5.50	6.63	3.19	3.19	6.00	4.31	1.00	10.19	2.88
75	5.81	6.13	7.88	3.56	3.56	6.00	5.13	1.00	10.56	3.63
90	6.81	7.00	9.25	4.06	4.06	9.00	5.81	1.00	14.06	4.25
105	7.94	9.00	10.56	4.56	4.56	9.00	7.44	1.00	14.56	4.56

AC10804B

DIMENSIONS ARE SUBJECT TO CHANGE. CERTIFIED DRAWINGS AVAILABLE UPON REQUEST.

TYPICAL SPECIFICATIONS

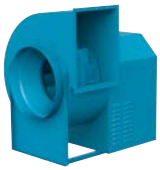

Model

BCV | DCV | BAV | FCV

Fans shall be Model BCV Backward Inclined, Model DCV Backward Inclined, Model BAV Backward Inclined Airfoil or Model FCV Forward Curved Utility Sets, as manufactured by Twin City Fan & Blower, Minneapolis, Minnesota.

PERFORMANCE — Fans shall be tested in accordance with AMCA 211 and AMCA 311 test codes for air moving devices and shall be guaranteed by the manufacturer to deliver rated published performance levels. DCV, BCV and BAV fans shall be licensed to bear the AMCA certified ratings seal for both sound and air, and fan efficiency grade (FEG). FCV fans sizes 122, 135, 150, 165, 182, 200, 222, 245, 270, 300, 330, and 365 shall be licensed to bear the AMCA certified ratings seal for air and fan efficiency grade (FEG).

HOUSING — Class I and Class II fan housings shall be heavy gauge, continuously welded construction. Housings with partially welded construction are not acceptable. Class L fan housings shall be lock seam construction. Housings shall be suitably braced to prevent vibration or pulsation. Housings shall have tapered spun, aerodynamically designed inlet cones or shrouds providing stable flow and high rigidity. Class I and Class II housings shall be of the rotatable design, convertible to seven standard discharge configurations. Class L housings shall be of the rotatable design, convertible to five standard discharge configurations.

WHEELS — BCV & DCV backward inclined wheels shall be single thickness plate type designed for maximum efficiency and quiet operation and shall be of the non-overloading type. Class I wheels, sizes 90 through 270 and Class L wheels, shall be constructed of aluminum, with blades riveted and welded to the spun wheel cone and backplate. Class I wheels, sizes 300 through 365, and all Class II wheels shall be constructed of heavy gauge steel with welded (not riveted) blades.

BAV backward inclined airfoil wheels shall be of the non-overloading type and include die-formed, airfoil type blades, continuously welded to the wheel cone and backplate. Partial welding will not be acceptable on airfoil blades. Size 245 and smaller use extruded aluminum blades. Sizes 270 and larger shall have die-formed airfoil steel blades.

FCV forward curved wheels shall be constructed of heavy gauge steel and solidly riveted to a steel shroud and backplate.

DDF forward curved wheels shall be constructed of aluminum with blades riveted to the centerplate and wheel outer rim.

All wheels shall be statically and dynamically balanced.

SHAFT — Shafts shall be AISI 1045 hot rolled steel, accurately turned, ground, polished, and ring gauged for accuracy. Shafts shall be sized for the first critical speed of at least 1.43 times the maximum speed.

BEARINGS — Bearings shall be heavy duty, grease lubricated, anti-friction ball, self-aligning, pillow block type and selected for a minimum average bearing life (AFBMA L-50) in excess of 200,000 hours at the maximum fan RPM.

DRIVE — Motor sheaves shall be cast iron, and supplied as either variable pitch or fixed pitch. Drives and belts shall be rated for a minimum of 120% of the required motor HP.

FINISH AND COATING — Class I and Class II fan assemblies, excluding the shaft, shall be thoroughly degreased and deburred before application of a rust-preventative primer for Class I and Class II construction. After the fan is completely assembled, a finish coat of paint shall be applied to the entire assembly of Class I and Class II fans. The fan shaft shall be coated with a petroleum-based rust protectant. Galvanized steel and aluminum components shall be unpainted.

ACCESSORIES — When specified, accessories such as belt guards, weather covers, access doors, variable inlet vanes, outlet shutters, inlet screens, etc., shall be provided by Twin City Fan & Blower to maintain one source responsibility.

FACTORY RUN TEST — All fans prior to shipment shall be completely assembled and test run as a unit at operating speed or maximum RPM allowed for the particular construction type. Each wheel shall be statically and dynamically balanced in accordance with ANSI/AMCA 204-96 “Balance Quality and Vibration Levels for Fans” to Fan Application Category BV-3, Balance Quality Grade G6.3. Balance readings shall be taken by electronic type equipment in the axial, vertical, and horizontal directions on each of the bearings. Records shall be maintained and a written copy shall be available upon request.

GUARANTEE — The manufacturer shall guarantee the workmanship and materials for its BCV, DCV, BAV and FCV Utility Sets for at least one (1) year from startup or eighteen (18) months from shipment, whichever occurs first.

Model

BCVR | BCVSH

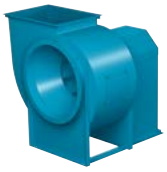

Fans shall be Model BCVR (UL 762) or BCVSH (UL Smoke & Heat) Backward Inclined Utility Sets, as manufactured by Twin City Fan & Blower, Minneapolis, Minnesota.

PERFORMANCE — Fans shall be tested in accordance with AMCA 211 and AMCA 311 test codes for air moving devices and shall be guaranteed by the manufacturer to deliver rated published performance levels. BCVR and BCVSH fans shall be licensed to bear the AMCA certified ratings seal for both sound and air.

HOUSING — Fan housings shall be heavy gauge, continuously welded construction. Housings with lock seam or partially welded construction are not acceptable. Housings shall be suitably braced to prevent vibration or pulsation. Housings shall have tapered spun, aerodynamically designed inlet cones or shrouds providing stable flow and high rigidity. Housings shall be of the rotatable design, convertible to seven standard discharge configurations.

WHEELS — BCV backward inclined wheels shall be single thickness plate type designed for maximum efficiency and quiet operation and shall be of the non-overloading type. BCVR and BCVSH Class I, sizes 90 through 270 and Class L wheels, shall be constructed of aluminum, with blades riveted and welded to the spun wheel cone and backplate. Class I wheels, sizes 300 through 365, and all Class II wheels shall be constructed of heavy gauge steel with welded (not riveted) blades. BCVSH fans shall have steel wheels on all fan sizes.

All wheels shall be statically and dynamically balanced.

SHAFT — Shafts shall be AISI 1045 hot rolled steel, accurately turned, ground, polished, and ring gauged for accuracy. Shafts shall be sized for the first critical speed of at least 1.43 times the maximum speed.

BEARINGS — Bearings shall be heavy duty, grease lubricated, anti-friction ball, self-aligning, pillow block type and selected for a minimum average bearing life (AFBMA L-50) in excess of 200,000 hours at the maximum fan RPM.

DRIVE — Motor sheaves shall be cast iron, and supplied as either variable pitch or fixed pitch. BCVR drives and belts shall be rated for a minimum of 120% of the required motor HP. BCVSH fans shall have drives and belts rated for 150% of the required motor HP with a minimum of two belts.

FINISH AND COATING — The entire fan assembly, excluding the shaft, shall be thoroughly degreased and deburred before application of a rust-preventative primer for Class I and Class II construction. After the fan is completely assembled, a finish coat of paint shall be applied to the entire assembly of Class I and Class II fans. The fan shaft shall be coated with a petroleum-based rust protectant. Galvanized steel and aluminum components shall be unpainted.

ACCESSORIES — When specified and dependent upon the fan type, accessories such as belt guards, weather covers, access doors, outlet shutters, inlet screens, etc., shall be provided by Twin City Fan & Blower to maintain one source responsibility.

FACTORY RUN TEST — All fans prior to shipment shall be completely assembled and test run as a unit at operating speed or maximum RPM allowed for the particular construction type. Each wheel shall be statically and dynamically balanced in accordance with ANSI/AMCA 204-96 "Balance Quality and Vibration Levels for Fans" to Fan Application Category BV-3, Balance Quality Grade G6.3. Balance readings shall be taken by electronic type equipment in the axial, vertical and horizontal directions on each of the bearings. Records shall be maintained and a written copy shall be available upon request.

GUARANTEE — The manufacturer shall guarantee the workmanship and materials for its BCVR and BCVSH Utility Sets for at least one (1) year from startup or eighteen (18) months from shipment, whichever occurs first.

Model

DDF

Fans shall be Model DDF Forward Curved Junior Utility Set, as manufactured by Twin City Fan & Blower, Minneapolis, Minnesota.

PERFORMANCE - Fans shall be tested in accordance with ANSI/AMCA Standard 210 (air performance) and 300 (sound performance) in an AMCA accredited laboratory. Fans shall have a sharply rising pressure characteristic extending through the operating range and continuing to rise beyond the peak efficiency to ensure quiet and stable operation. Fans shall have a non-overloading design with self-limiting horsepower characteristics and shall reach a peak in the normal selection area. All fans shall be capable of operating over the minimum pressure class limits as specified in AMCA Standard 99.

HOUSING - Fan housings shall be of heavy gauge, continuously welded construction. Housings with lock seams or partially welded construction are not acceptable. Housings shall be suitably braced to prevent vibration or pulsation. Housings shall have tapered spun, aerodynamically designed inlet cones or funnels providing stable flow and high rigidity.

WHEEL - Forward curved wheels shall be designed for maximum efficiency and quiet operation. Wheels shall be constructed of aluminum, with blades securely riveted to the end rings and center plate. All wheels shall be statically and dynamically balanced.

FINISH AND COATING - The entire fan assembly shall be thoroughly degreased and deburred before application of a rust-preventative primer. After the fan is completely assembled, a finish coat of paint shall be applied to the entire assembly.

ACCESSORIES - When specified, accessories such as weather cover, access doors, companion flanges, discharge shutters, inlet screens, etc., shall be provided by Twin City Fan & Blower to maintain one source responsibility.

FACTORY BALANCE AND RUN TESTING - All fan wheels shall be statically and dynamically balanced in accordance with ANSI/AMCA 204 "Balance Quality and Vibration Levels for Fans" to Fan Application Category BV-3. This corresponds to a Balance Quality Grade G6.3. All assembled fans are test run at the rated operating speed or at the maximum RPM of the fan. Vibration readings are recorded in the horizontal, vertical and axial directions on both bearings. Trim balancing is performed if necessary to maintain BV-3 vibration limits. Records shall be maintained and a written copy shall be available upon request.

GUARANTEE - The manufacturer shall guarantee the workmanship and materials for its DDF Forward Curved Junior Utility Sets for at least one (1) year from startup or eighteen (18) months from shipment, whichever occurs first.

INDUSTRIAL & COMMERCIAL FANS

Centrifugal Fans | Utility Sets | Plenum & Plug Fans | Inline Centrifugal Fans
Mixed Flow Fans | Tubeaxial & Vaneaxial Fans | Propeller Wall Fans | Propeller Roof Ventilators
Centrifugal Roof & Wall Exhausters | Ceiling Ventilators | Gravity Ventilators | Duct Blowers
Radial Bladed Fans | Radial Tip Fans | High Efficiency Industrial Fans | Pressure Blowers
Laboratory Exhaust Fans | Filtered Supply Fans | Mancoolers | Fiberglass Fans | Custom Fans

TWIN CITY FAN & BLOWER | WWW.TCF.COM

5959 Trenton Lane N | Minneapolis, MN 55442 | Phone: 763-551-7600 | Fax: 763-551-7601