


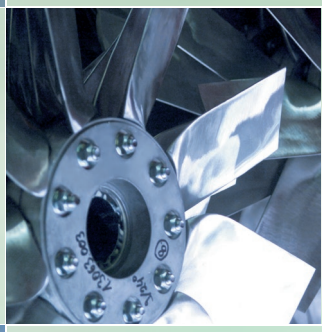



# Axial Flow Fans

## - Direct Driven

## - Belt Driven

# A09-IN

Wolter Ventilators India Pvt. Ltd. certifies that the series AXV shown herein are licensed to bear the AMCA Seal. The ratings shown are based on tests and procedures performed in accordance with AMCA Publication 211 and AMCA Publication 311 and comply with the requirements of the AMCA Certified Ratings Program.

# Table of Content



Subject to change without prior notice.

# Axial Flow Fans
## Technical information

### Fan type code

**AXV 450-26° LH100 -2 AL SU 400°C/2Std**

- 400°C/2Std: Smoke extract fan 400°C/120min, 300°C/120min
- SU: Air flow and form of running S, D, SU, SO, DU, DO
- AL: Material of blade
- 2: number of poles
- LH100: Casing version SH = Short-cased LH1 = Long-cased
- 26°: Pitch angle
- 450: AXV: impeller-ø 355...2800
- AXV: Axial impeller blade type

## Design features

### Types and duty range

Wolter Axial flow fans can be used for various applications in ventilation and process air technology. Standard diameters range from 355 to 2800mm, with airflow rates of up to 290 m³/s at static pressure increases of up to 1600 Pa. Higher pressures can be achieved by using contra-rotating multi-stage fans.

Belt driven fans are designed for application that required motor to be isolated from the airstreams.

### Smoke spill operation

The AXV range of axial fans is designed and tested to operate at standard temperatures as well as at elevated temperatures of 300°C for 60 (F300) and 120 minutes and 400°C for at least 120 minutes (F400), according to DIN EN ISO 12101, part 3. The following fan curves are valid for standard temperatures and 300°/ 60 (F300) and 120 minutes operation. To select a fan for 400°C/120 minutes operation, please contact our technical support.

### Casing

Fan casings are of hot-dip galvanized finishing. Flanges are rolled, the pitch circles of holes are in accordance with DIN 24 154, R2.

- LH - Long-cased axial fan, with external terminal box
- SH - Short-cased axial fan

If motors require additional lubrication, tubes and grease-nipples are fitted to the outside of the fan casing. An inspection hole, closed by a rubber plug, allows technical personnel to view the direction of impeller rotation.

### Impellers

AXV impellers, hubs and blades are made off pressure-cast aluminium alloy, the aerodynamic profile guarantees high efficiency and low noise levels. The blade pitch angle is adjustableduring standstill. The variable number of blades the expands the performance range.

### Motor

Wolter uses closed squirrel cage motors according to IEC 34, if required also in accordance with EPACT. Standard motors are class F with IP 55 protection class. Multi speed versions with 2 or 3 speeds (Dahlander circuit or separate windings) are also available, as well as explosion-proof versions or specific industrial executions such as marine-type fans. The motor bearings have a L 10 life.

### Forms of running

Wolter AXV axial flow fans are available for all forms of running. The right chart shows all standard forms of running. Please indicate the required configuration when ordering. Without specific instructions, fans will be delivered in configuration S. Arrows outside the fan casing indicates the correct direction of rotation and airflow.

Form D, DU and DO are not licensed by AMCA International.

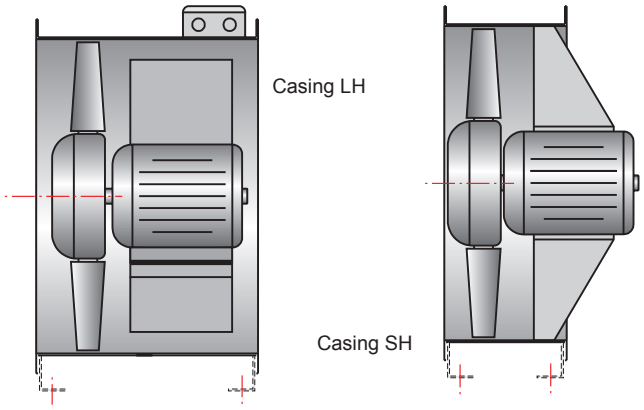


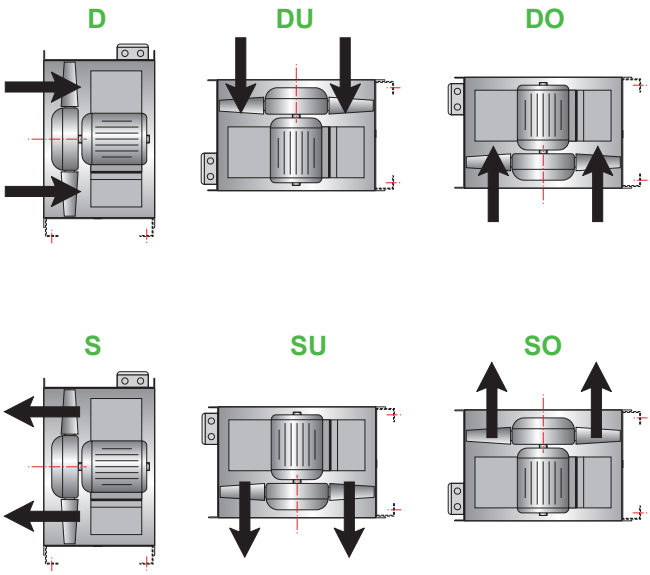

AXV DD

AXV BD

## Fan performance curves

The performance curves for these fan types have been established in mounting position D (according to AMCA 210, duct connected to inlet and outlet sides) and represent the total pressure increase $\Delta p_t$ as a function of the volume flow. The dynamic pressure $p_{d2}$ is related to the flange cross-sectional area at the of the fan.

## Sound levels

The ascertaining of the sound level follows the Reverberant Room Method in accordance to AMCA 300. The A-weighted sound power levels is shown on the performance curves.

## Belt driven design

Belt driven fan with single / dual motors can be mounted in various positions to suit the actual site condition. Belt driven fans are used for applications to extract more heavily polluted air i.e. presence of corrosive or hazardous fumes, or dirt-laden, moist air or hot air from professional kitchens. Various mounting positions are illustrated.

## Ordering designations

When ordering, please provide the following information:

- fan type code (see above), casing version and form of running
- duty required at standard air temperature (air volume in m³/h at static pressure in Pa)
- motor power rating in kW
- electrical supply
- required ancillary equipment

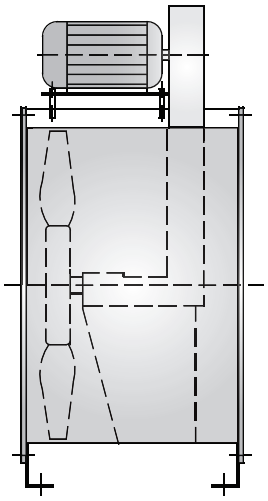

Motor Mounting
at Zero Position

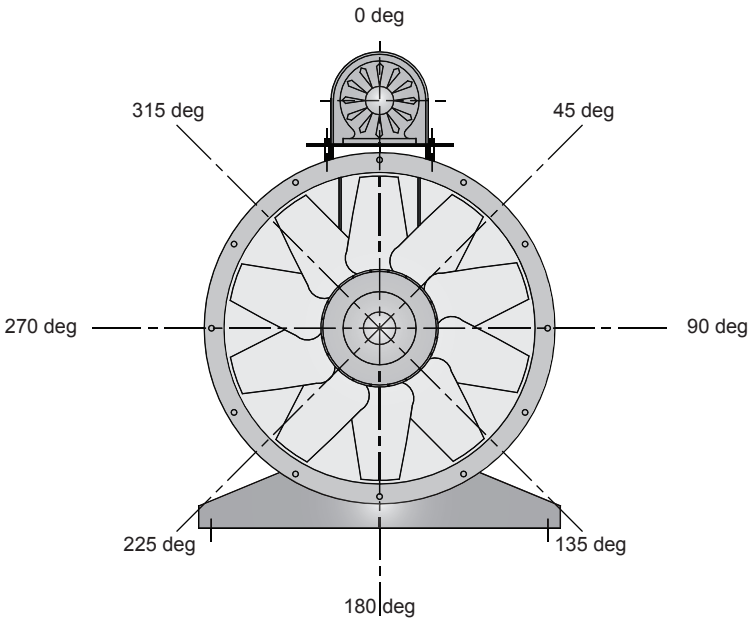


Motor Mounting Position - Specify in degree

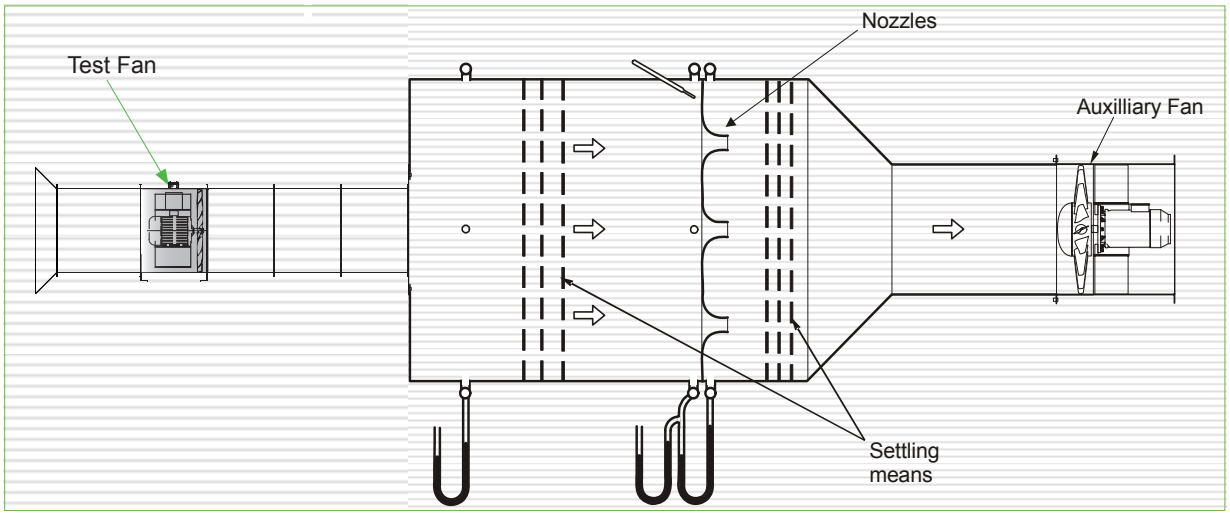


**AMCA 210 Figure 12**
**ISO 5801 Figure 73b**

## Fan selection and installation

### Fan selection

Please select fans according to the nearest performance curve above the required duty point. The middle range of each fan curve is the area of highest efficiency. Do not select fans at the upper end of the fan curve, as this might cause the fan to work in stall. In order to avoid motor overloading, please select motors according to the peak power of the respective performance curve. Please refer to the selection example on the following page.

### Fan installation

When installing the fan, please consider the following instructions:

- Fans with free inlet and outlet should be installed with an unobstructed distance of at least 1,5 x fan diameter on suction and pressure sides. Fans should have a bellmouth on the inlet side in order to assure optimal incoming flow. A diffusor mounted on the pressure side will increase efficiency.
- When installing fans in a ducted system, adequate distance to other structural parts such as bends, filters and silencers should be provided for. A sharp bond radius of the duct near the suction or pressure side of the fan is to be avoided. Flexible connections are to be installed in a way that does not obstruct the outlet cross section of the fan (see following page).

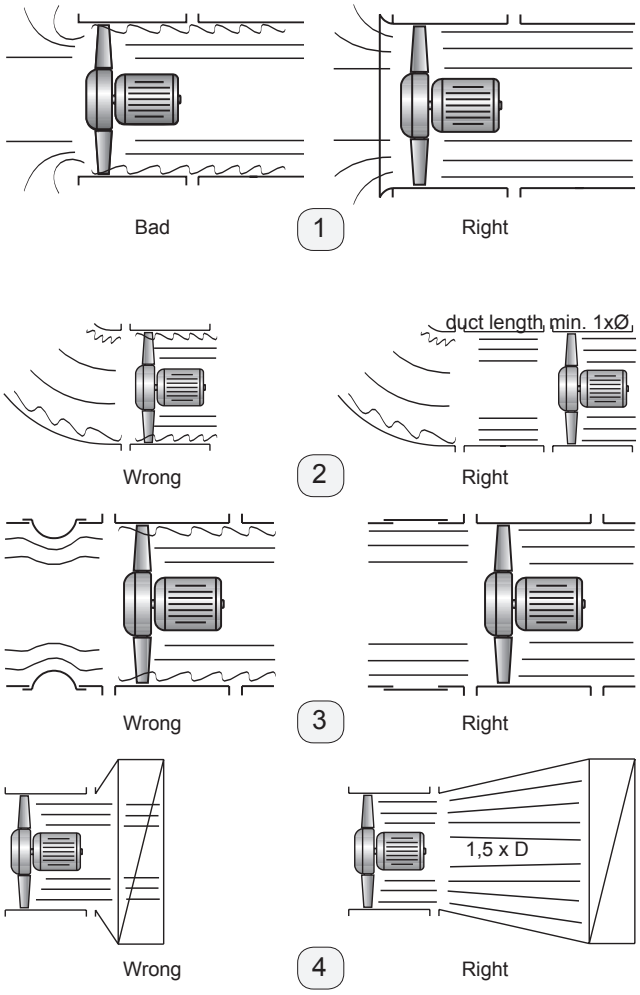


## Selection example

### Required duty point

> Volume flow : 5.000 m3/h

> Static pressure: 110 Pa

In order to calculate the total pressure, please add velocity pressure to static pressure (30 Pa dynamic pressure + 110 Pa static pressure = 140 Pa total pressure)

> Fan speed: 1.440 1/min (4-pole)

### Using the fan curve

Having chosen a fan with adequate performance range for the required duty point, plot volume flow and pressure.

At the point of intersection, the following data can be read:

> Motor speed or number of poles 1.440 1/min - 4-pole

> Pitch angle: 18 degrees

> FEG Rating: FEG71 (see page5)

> Inlet sound power level: 80 dB(A)

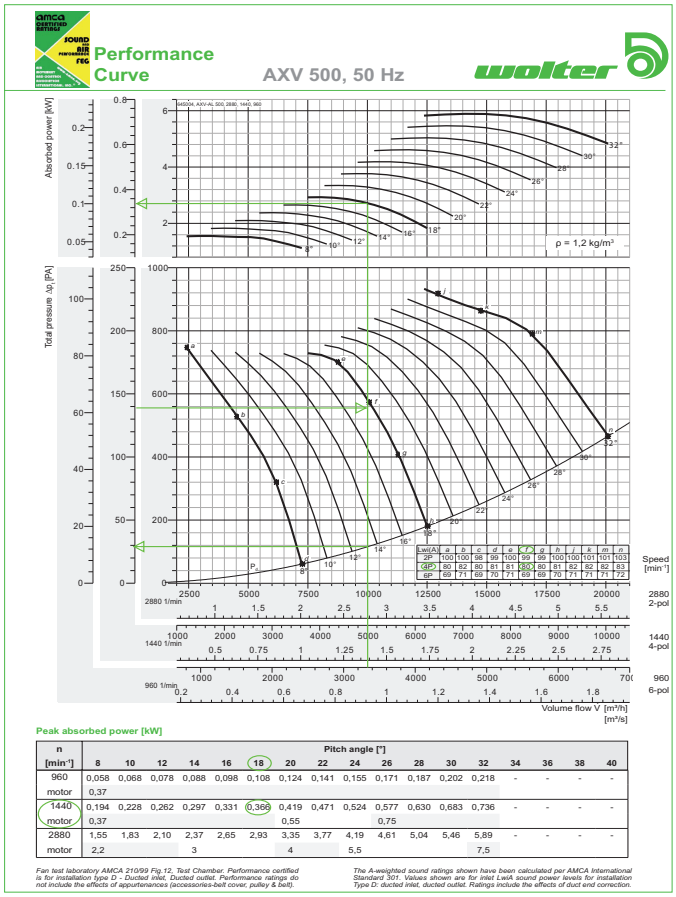


## Calculation of motor power:

There are two possibilities to calculate the motor power:

1) Calculation of absorbed power by using the fan curve in duty point: 0,338 kW

   Motor power: 0,37 kW

2) Calculation according to peak absorbed power, see table below the fan curve: 0,366 kW

   Motor power: 0,37 kW

The given peak absorbed power is the maximum shaft absorbed power over the whole pitch angle curve in.

# AMCA - FEG rating

## *Fan Efficiency Grade - AXV*

Certified FEGs are determined in accordance with AMCA 205-12 Energy Efficiency Classification for fans. In conjunction with AMCA 211-13 (Rev. 2015) Certified Ratings Program, Product Rating Manual for Fan Air Performance. This classification is based on fan peak (optimum) total efficiency for a given fan speed, fan size and application category. For the purpose of energy classification, the peak efficiency can be determined at a speed not higher than the maximum design speed of the fan.

The AMCA Certified Ratings Seal applies to the Fan Efficiency Grade (FEG) for AXV series Axial Fan model AXV 355 to AXV 2800 as shown in the table below.

| Fan Model No. | Fan Speed (rpm) | Fan Outlet Area (m2) | Fan Efficiency Grades (FEG) | Fan Model No. | Fan Speed (rpm) | Fan Outlet Area (m2) | Fan Efficiency Grade (FEG) |
|---|---|---|---|---|---|---|---|
| AXV 355 | 2880/1440/960 | 0,1012 | FEG63 | AXV 1250 | 1440/960/720 | 1,2272 | FEG71 |
| AXV 400 | 2880/1440/960 | 0,1269 | FEG67 | AXV 1400 | 960/720/576 | 1,5504 | FEG75 |
| AXV 450 | 2880/1440/960 | 0,1590 | FEG63 | AXV 1600 | 960/720/576 | 1,9981 | FEG67 |
| AXV 500 | 2880/1440/960 | 0,2003 | FEG71 | AXV 1800 | 960/720/576 | 2,5588 | FEG75 |
| AXV 560 | 2880/1440/960 | 0,2516 | FEG67 | AXV 2000 | 960/720/576 | 3,1573 | FEG75 |
| AXV 630 | 2880/1440/960 | 0,3167 | FEG63 | AXV 2200 | 720/576/480 | 3,8186 | FEG75 |
| AXV 710 | 1440/960/720 | 0,3982 | FEG67 | AXV 2400 | 720/576/480 | 4,5428 | FEG75 |
| AXV 800 | 1440/960/720 | 0,5001 | FEG67 | AXV 2500 | 720/576/480 | 4,9284 | FEG75 |
| AXV 900 | 1440/960/720 | 0,6333 | FEG63 | AXV 2600 | 720/576/480 | 5,3297 | FEG75 |
| AXV 1000 | 1440/960/720 | 0,7980 | FEG71 | AXV 2800 | 720/576/480 | 6,1795 | FEG75 |
| AXV 1120 | 1440/960/720 | 0,9978 | FEG71 | | | | |

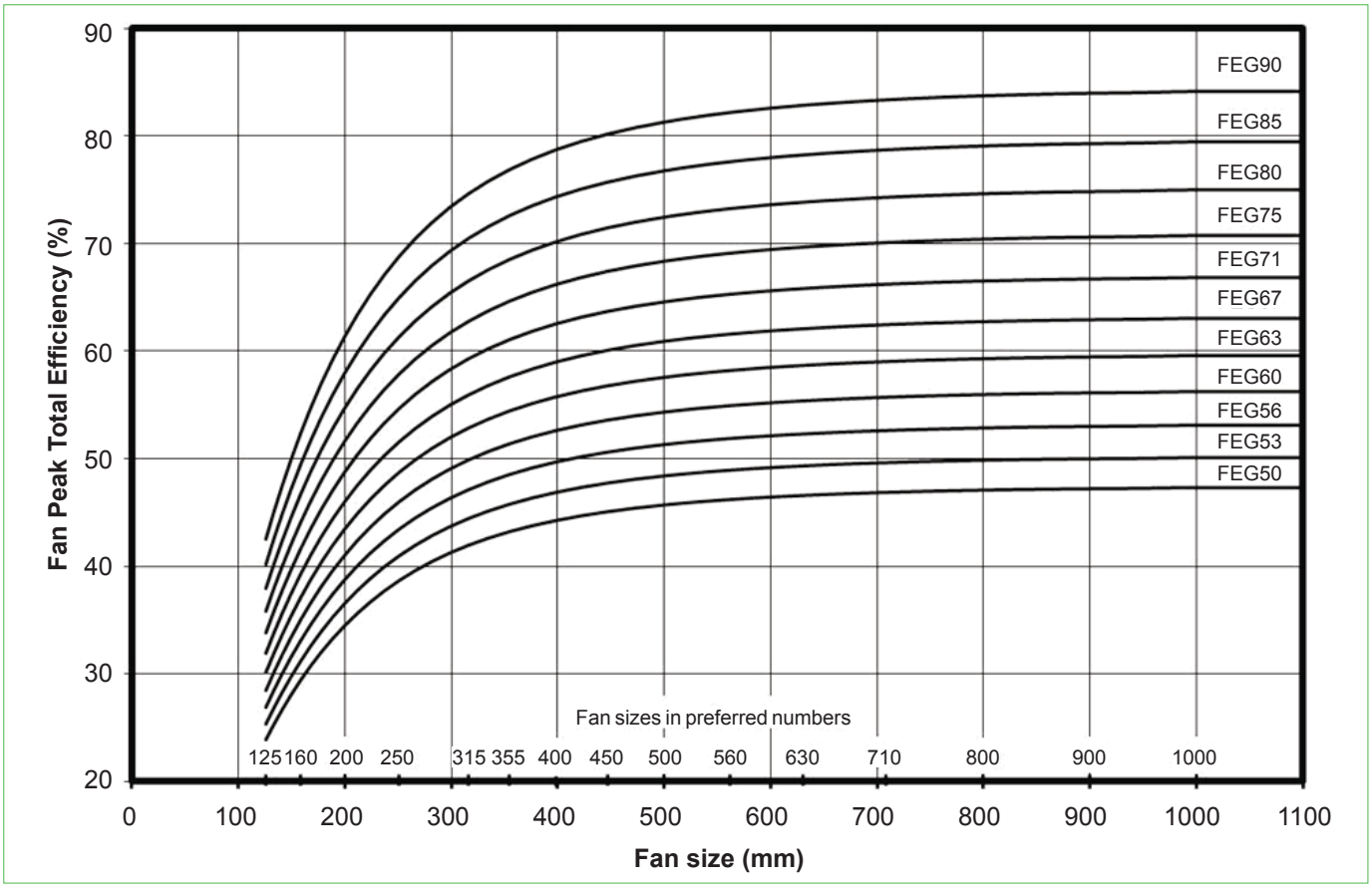

# Performance Curve

## AXV 355, 50 Hz

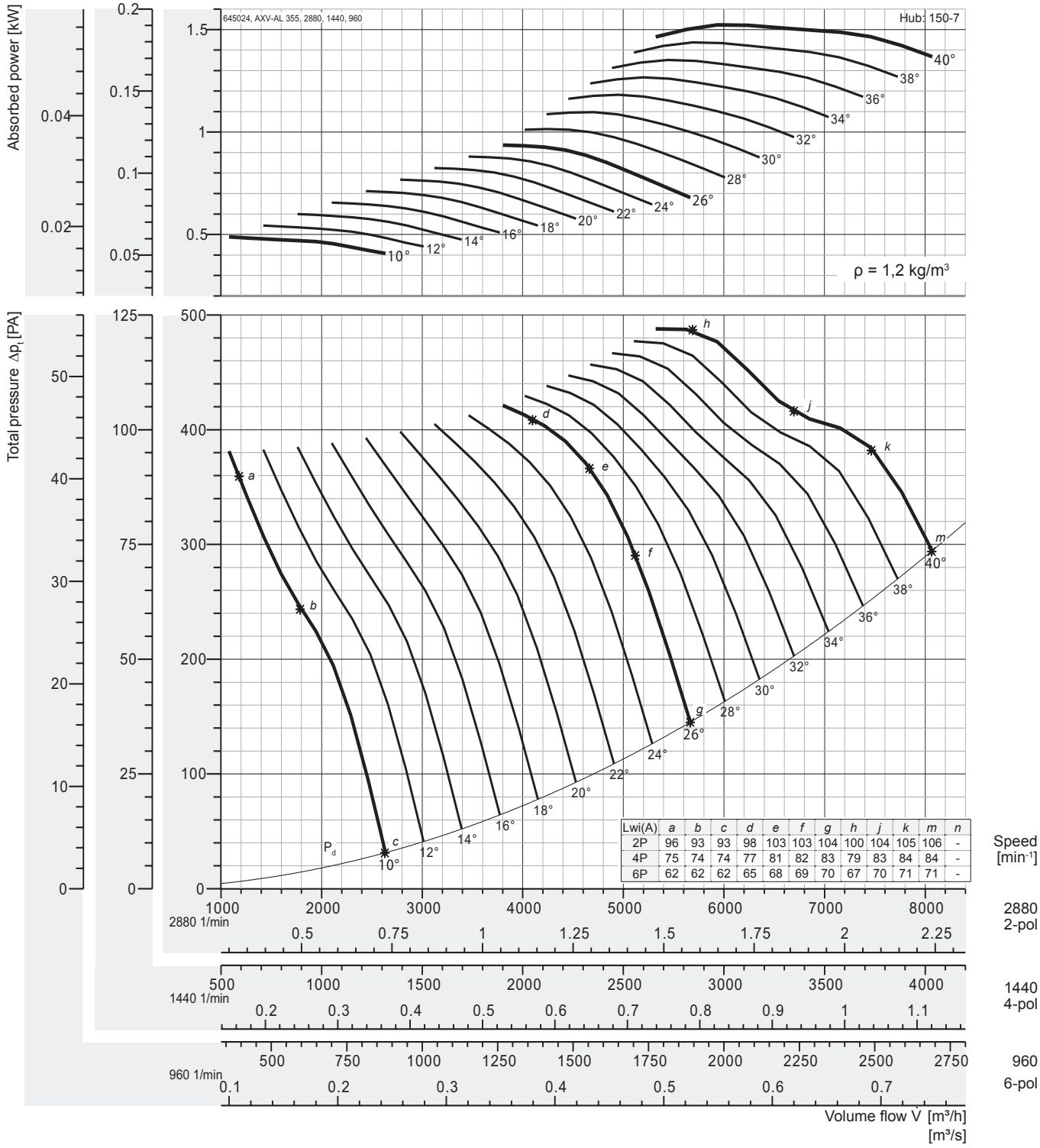


### Peak absorbed power [kW]

| n | Pitch angle [°] | | | | | | | | | | | | | | | | |
|---|---|---|---|---|---|---|---|---|---|---|---|---|---|---|---|---|---|
| [min⁻¹] | 8 | 10 | 12 | 14 | 16 | 18 | 20 | 22 | 24 | 26 | 28 | 30 | 32 | 34 | 36 | 38 | 40 |
| 960 | - | 0,018 | 0,020 | 0,022 | 0,024 | 0,026 | 0,028 | 0,031 | 0,033 | 0,035 | 0,038 | 0,041 | 0,044 | 0,047 | 0,050 | 0,053 | 0,056 |
| motor | | 0,37 | | | | | | | | | | | | | | | |
| 1440 | - | 0,061 | 0,068 | 0,075 | 0,082 | 0,089 | 0,096 | 0,103 | 0,110 | 0,117 | 0,127 | 0,137 | 0,148 | 0,158 | 0,169 | 0,180 | 0,190 |
| motor | | 0,37 | | | | | | | | | | | | | | | |
| 2880 | - | 0,488 | 0,544 | 0,600 | 0,656 | 0,712 | 0,768 | 0,824 | 0,880 | 0,936 | 1,01 | 1,10 | 1,18 | 1,267 | 1,352 | 1,44 | 1,52 |
| motor | | 0,55 | | 0,75 | | | 1,1 | | | | | | 1,5 | | | | 2,2 |

*Fan test laboratory AMCA 210/99 Fig.12, Test Chamber. Performance certified is for installation type D - Ducted inlet, Ducted outlet. Performance ratings do not include the effects of appurtenances (accessories-belt cover, pulley & belt).*

*The A-weighted sound ratings shown have been calculated per AMCA International Standard 301. Values shown are for inlet LwiA sound power levels for installation Type D: ducted inlet, ducted outlet. Ratings include the effects of duct end correction.*

*Sound power frequency spectrum $L_{wrel}$ Page 54-55*

*Dimensions + Accessories Page 49-52*

# Performance Curve

## AXV 400, 50 Hz

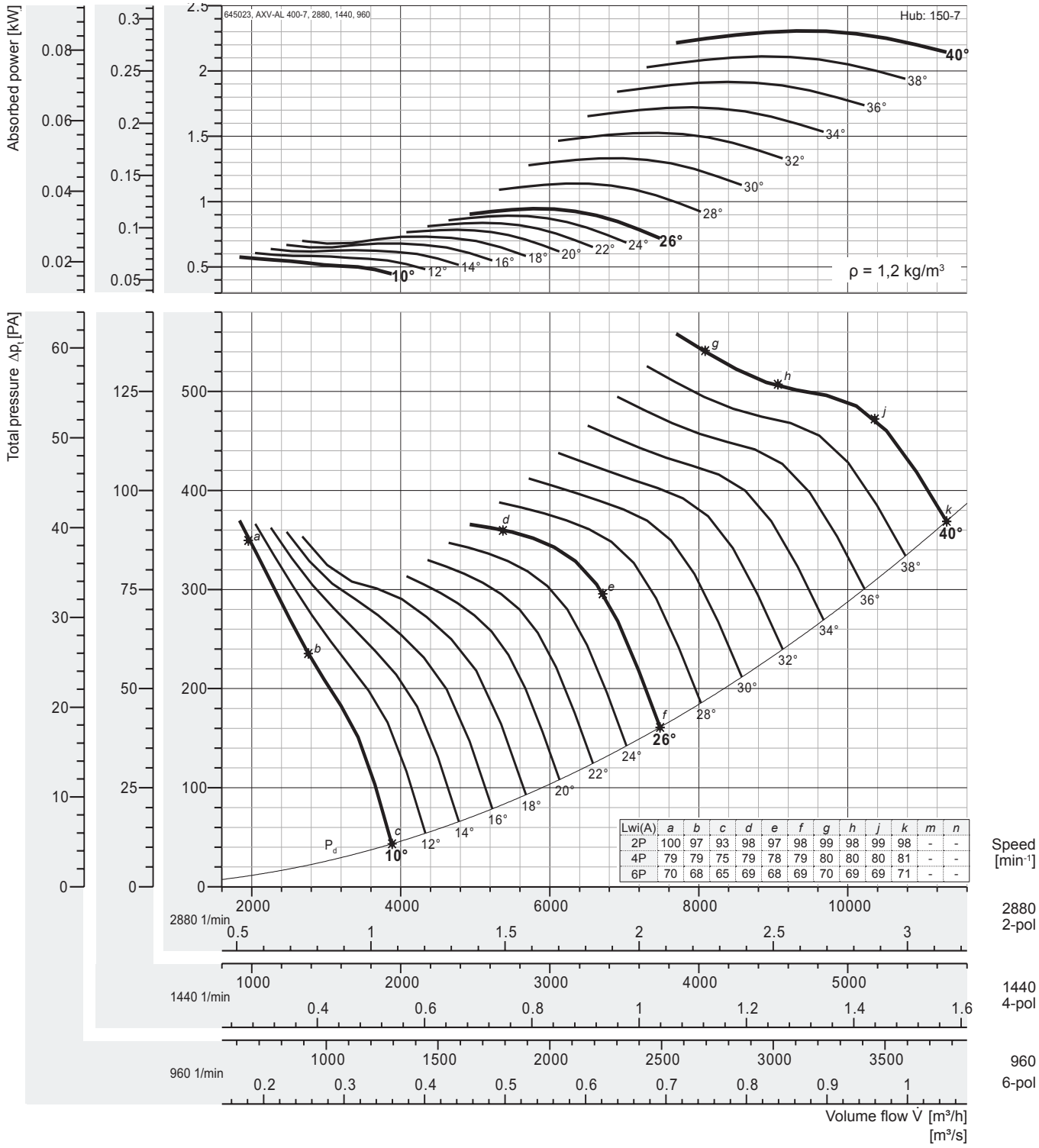


### Peak absorbed power [kW]

| n | Pitch angle [°] | | | | | | | | | | | | | | | | |
|---|---|---|---|---|---|---|---|---|---|---|---|---|---|---|---|---|---|
| [min⁻¹] | 8 | 10 | 12 | 14 | 16 | 18 | 20 | 22 | 24 | 26 | 28 | 30 | 32 | 34 | 36 | 38 | 40 |
| 960 | - | 0,021 | 0,022 | 0,024 | 0,025 | 0,027 | 0,029 | 0,031 | 0,033 | 0,035 | 0,042 | 0,049 | 0,057 | 0,064 | 0,071 | 0,078 | 0,085 |
| motor | | 0,37 | | | | | | | | | | | | | | | |
| 1440 | - | 0,072 | 0,076 | 0,080 | 0,085 | 0,092 | 0,098 | 0,105 | 0,111 | 0,118 | 0,142 | 0,166 | 0,191 | 0,215 | 0,240 | 0,264 | 0,288 |
| motor | | 0,37 | | | | | | | | | | | | | | | |
| 2880 | - | 0,576 | 0,607 | 0,638 | 0,679 | 0,733 | 0,784 | 0,838 | 0,892 | 0,946 | 1,14 | 1,33 | 1,53 | 1,72 | 1,92 | 2,11 | 2,31 |
| motor | | 0,75 | | | | | 1,1 | | | | 1,5 | | 2,2 | | | | 3 |

*Fan test laboratory AMCA 210/99 Fig.12, Test Chamber. Performance certified is for installation type D - Ducted inlet, Ducted outlet. Performance ratings do not include the effects of appurtenances (accessories-belt cover, pulley & belt).*

*The A-weighted sound ratings shown have been calculated per AMCA International Standard 301. Values shown are for inlet LwiA sound power levels for installation Type D: ducted inlet, ducted outlet. Ratings include the effects of duct end correction.*

*Sound power frequency spectrum $L_{wrel}$ Page 54-55*

*Dimensions + Accessories Page 49-52*

# Performance Curve

## AXV 450, 50 Hz

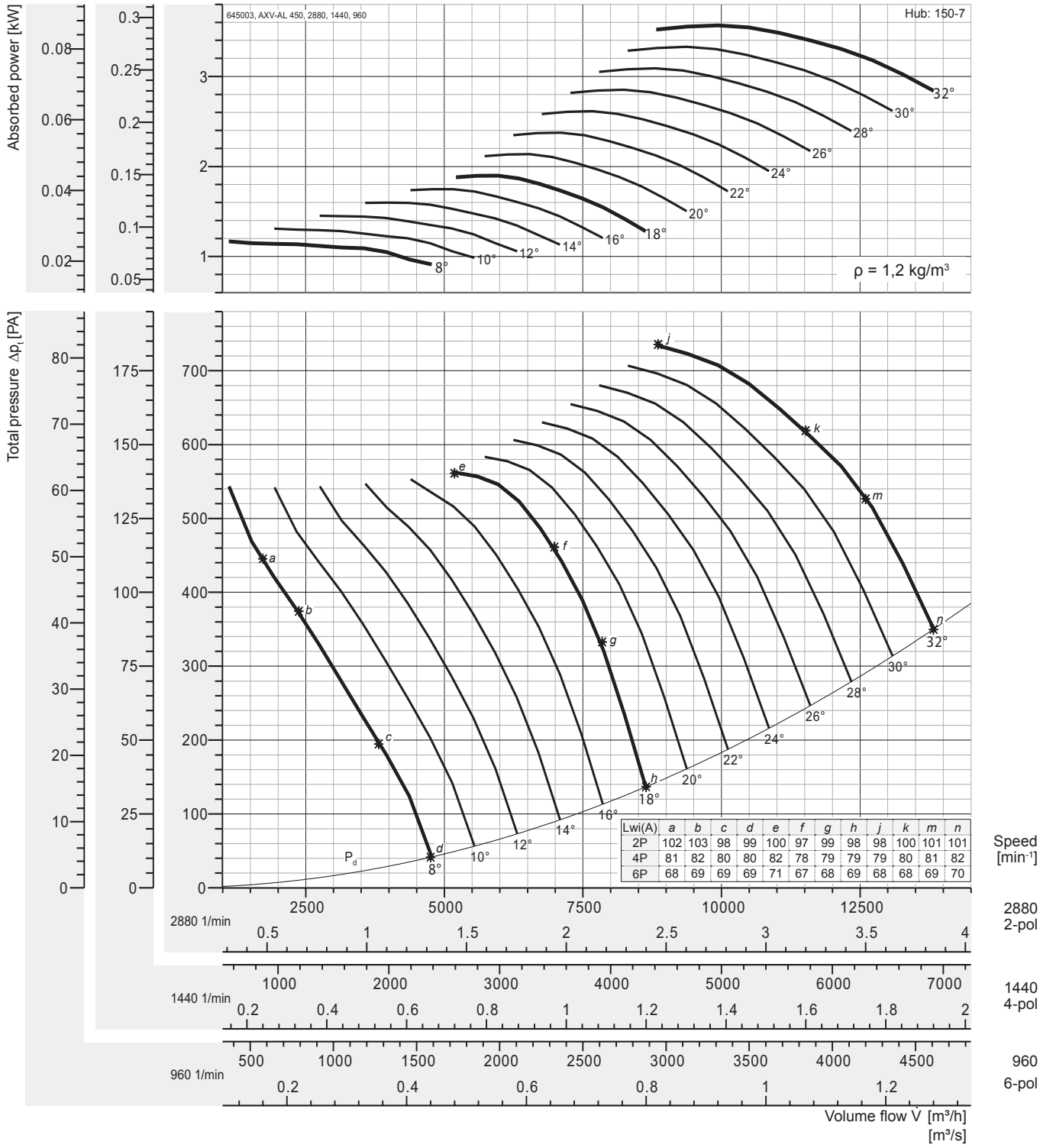


| Lwi(A) | a | b | c | d | e | f | g | h | j | k | m | n |
|---|---|---|---|---|---|---|---|---|---|---|---|---|
| 2P | 102 | 103 | 98 | 99 | 100 | 97 | 99 | 98 | 98 | 100 | 101 | 101 |
| 4P | 81 | 82 | 80 | 80 | 82 | 78 | 79 | 79 | 79 | 80 | 81 | 82 |
| 6P | 68 | 69 | 69 | 69 | 71 | 67 | 68 | 69 | 68 | 68 | 69 | 70 |

### Peak absorbed power [kW]

| n | Pitch angle [°] | | | | | | | | | | | | | | | | |
|---|---|---|---|---|---|---|---|---|---|---|---|---|---|---|---|---|---|
| [min⁻¹] | 8 | 10 | 12 | 14 | 16 | 18 | 20 | 22 | 24 | 26 | 28 | 30 | 32 | 34 | 36 | 38 | 40 |
| 960 | 0,043 | 0,049 | 0,054 | 0,059 | 0,065 | 0,070 | 0,079 | 0,088 | 0,097 | 0,106 | 0,114 | 0,123 | 0,132 | - | - | - | - |
| motor | 0,37 | | | | | | | | | | | | | | | | |
| 1440 | 0,146 | 0,164 | 0,182 | 0,200 | 0,218 | 0,237 | 0,267 | 0,297 | 0,327 | 0,356 | 0,386 | 0,416 | 0,446 | - | - | - | - |
| motor | 0,37 | | | | | | | | | | 0,55 | | | | | | |
| 2880 | 1,17 | 1,31 | 1,45 | 1,60 | 1,75 | 1,90 | 2,14 | 2,38 | 2,61 | 2,852 | 3,09 | 3,33 | 3,567 | - | - | - | - |
| motor | 1,5 | | | 2,2 | | | | 3 | | | 4 | | | | | | |

*Fan test laboratory AMCA 210/99 Fig.12, Test Chamber. Performance certified is for installation type D - Ducted inlet, Ducted outlet. Performance ratings do not include the effects of appurtenances (accessories-belt cover, pulley & belt).*

*The A-weighted sound ratings shown have been calculated per AMCA International Standard 301. Values shown are for inlet LwiA sound power levels for installation Type D: ducted inlet, ducted outlet. Ratings include the effects of duct end correction.*

*Sound power frequency spectrum $L_{wrel}$ Page 54-55*

*Dimensions + Accessories Page 49-52*

# Performance Curve

## AXV 500, 50 Hz

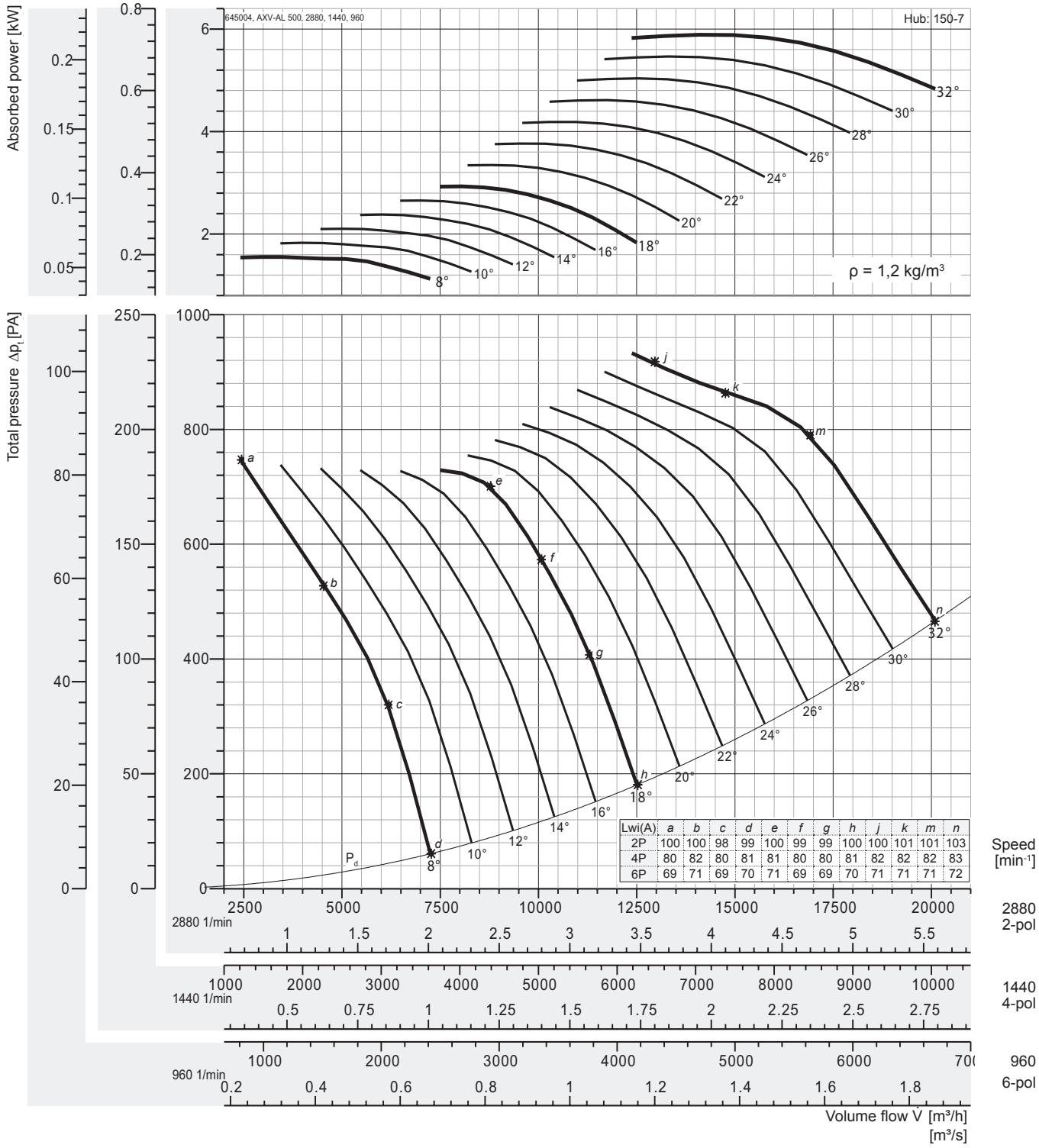


### Peak absorbed power [kW]

** Out of Range*

| n | Pitch angle [°] | | | | | | | | | | | | | | | | |
|---|---|---|---|---|---|---|---|---|---|---|---|---|---|---|---|---|---|
| [min⁻¹] | 8 | 10 | 12 | 14 | 16 | 18 | 20 | 22 | 24 | 26 | 28 | 30 | 32 | 34 | 36 | 38 | 40 |
| 960 | 0,058 | 0,068 | 0,078 | 0,088 | 0,098 | 0,108 | 0,124 | 0,141 | 0,155 | 0,171 | 0,187 | 0,202 | 0,218 | - | - | - | - |
| motor | 0,37 | | | | | | | | | | | | | | | | |
| 1440 | 0,194 | 0,228 | 0,262 | 0,297 | 0,331 | 0,366 | 0,419 | 0,471 | 0,524 | 0,577 | 0,630 | 0,683 | 0,736 | - | - | - | - |
| motor | 0,37 | | | | | | 0,55 | | | 0,75 | | | | | | | |
| 2880 | 1,55 | 1,83 | 2,10 | 2,37 | 2,65 | 2,93 | 3,35 | 3,77 | 4,19 | 4,61 | 5,04 | 5,46 | 5,89 | - | - | - | - |
| motor | 2,2 | | | 3 | | | 4 | | -* | | | | | | | | |

*Fan test laboratory AMCA 210/99 Fig.12, Test Chamber. Performance certified is for installation type D - Ducted inlet, Ducted outlet. Performance ratings do not include the effects of appurtenances (accessories-belt cover, pulley & belt).*

*The A-weighted sound ratings shown have been calculated per AMCA International Standard 301. Values shown are for inlet LwiA sound power levels for installation Type D: ducted inlet, ducted outlet. Ratings include the effects of duct end correction.*

*Sound power frequency spectrum $L_{wrel}$ Page 54-55*

*Dimensions + Accessories Page 49-52*

# Performance Curve

## AXV 560, 50 Hz

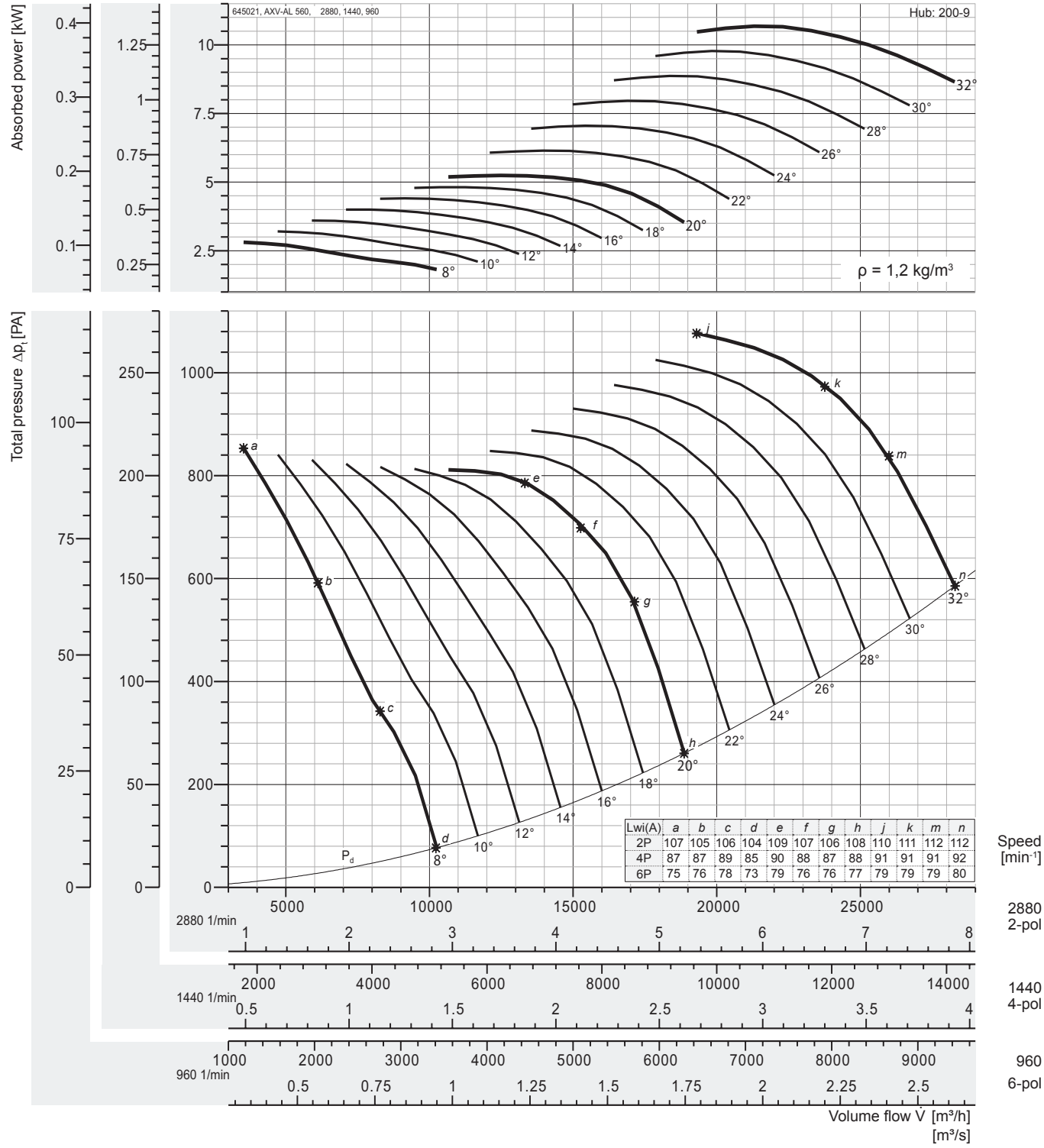


| Lwi(A) | a | b | c | d | e | f | g | h | j | k | m | n |
|---|---|---|---|---|---|---|---|---|---|---|---|---|
| 2P | 107 | 105 | 106 | 104 | 109 | 107 | 106 | 108 | 110 | 111 | 112 | 112 |
| 4P | 87 | 87 | 89 | 85 | 90 | 88 | 87 | 88 | 91 | 91 | 91 | 92 |
| 6P | 75 | 76 | 78 | 73 | 79 | 76 | 76 | 77 | 79 | 79 | 79 | 80 |

### Peak absorbed power [kW]

| n | Pitch angle [°] | | | | | | | | | | | | | | | | |
|---|---|---|---|---|---|---|---|---|---|---|---|---|---|---|---|---|---|
| [min⁻¹] | 8 | 10 | 12 | 14 | 16 | 18 | 20 | 22 | 24 | 26 | 28 | 30 | 32 | 34 | 36 | 38 | 40 |
| 960 | 0,104 | 0,119 | 0,133 | 0,148 | 0,163 | 0,178 | 0,194 | 0,228 | 0,261 | 0,295 | 0,329 | 0,362 | 0,396 | - | - | - | - |
| motor | 0,37 | | | | | | | | | | | | 0,55 | | | | |
| 1440 | 0,351 | 0,401 | 0,450 | 0,500 | 0,551 | 0,602 | 0,655 | 0,769 | 0,882 | 0,995 | 1,11 | 1,22 | 1,34 | - | - | - | - |
| motor | 0,37 | 0,55 | | | 0,75 | | | 1,1 | | | 1,5 | | | | | | |
| 2880 | 2,81 | 3,21 | 3,60 | 4,01 | 4,41 | 4,82 | 5,24 | 6,15 | 7,06 | 7,96 | 8,87 | 9,78 | 10,7 | - | - | - | - |
| motor | 3 | 4 | | 5,5 | | | | 7,5 | | 11 | | | | | | | |

*Fan test laboratory AMCA 210/99 Fig.12, Test Chamber. Performance certified is for installation type D - Ducted inlet, Ducted outlet. Performance ratings do not include the effects of appurtenances (accessories-belt cover, pulley & belt).*

*The A-weighted sound ratings shown have been calculated per AMCA International Standard 301. Values shown are for inlet LwiA sound power levels for installation Type D: ducted inlet, ducted outlet. Ratings include the effects of duct end correction.*

*Sound power frequency spectrum $L_{wrel}$ Page 54-55*

*Dimensions + Accessories Page 49-52*

# Performance Curve

## AXV 630, 50 Hz

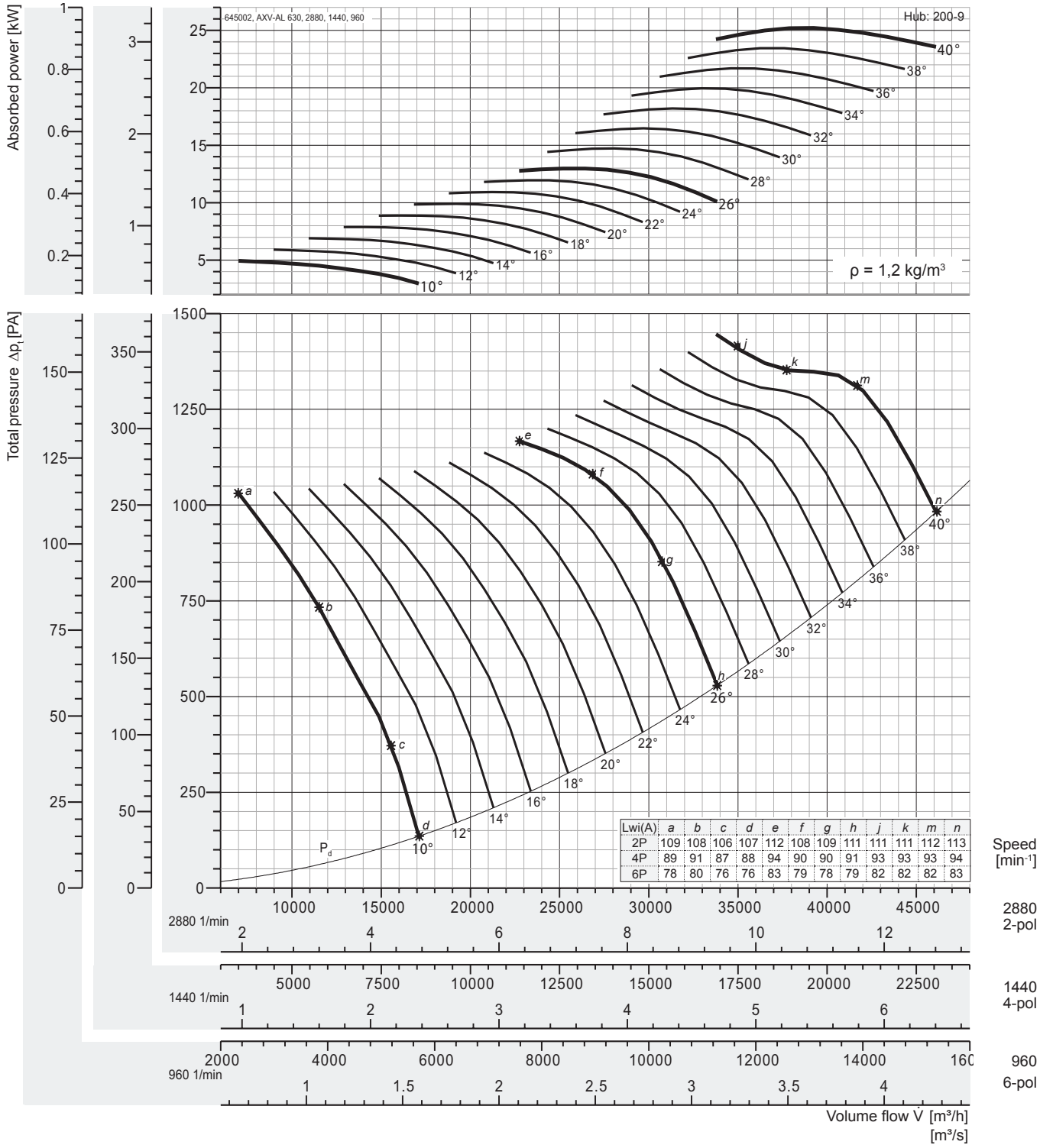


| Lwi(A) | a | b | c | d | e | f | g | h | j | k | m | n |
|---|---|---|---|---|---|---|---|---|---|---|---|---|
| 2P | 109 | 108 | 106 | 107 | 112 | 108 | 109 | 111 | 111 | 111 | 112 | 113 |
| 4P | 89 | 91 | 87 | 88 | 94 | 90 | 90 | 91 | 93 | 93 | 93 | 94 |
| 6P | 78 | 80 | 76 | 76 | 83 | 79 | 78 | 79 | 82 | 82 | 82 | 83 |

### Peak absorbed power [kW]

** Out of Range*

| n | Pitch angle [°] | | | | | | | | | | | | | | | | |
|---|---|---|---|---|---|---|---|---|---|---|---|---|---|---|---|---|---|
| [min⁻¹] | 8 | 10 | 12 | 14 | 16 | 18 | 20 | 22 | 24 | 26 | 28 | 30 | 32 | 34 | 36 | 38 | 40 |
| 960 | - | 0,183 | 0,219 | 0,256 | 0,292 | 0,329 | 0,367 | 0,405 | 0,443 | 0,481 | 0,545 | 0,610 | 0,675 | 0,739 | 0,804 | 0,868 | 0,934 |
| motor | | 0,37 | | | | | | 0,55 | | | | 0,75 | | | 1,1 | | |
| 1440 | - | 0,618 | 0,741 | 0,863 | 0,986 | 1,11 | 1,24 | 1,37 | 1,49 | 1,62 | 1,84 | 2,06 | 2,28 | 2,50 | 2,71 | 2,93 | 3,15 |
| motor | | 0,75 | | 1,1 | | 1,5 | | | | 2,2 | | | 3 | | | | 4 |
| 2880 | - | 4,94 | 5,92 | 6,90 | 7,88 | 8,88 | 9,90 | 10,9 | 12,0 | 13,0 | 14,7 | 16,5 | 18,2 | 20,0 | 21,7 | 23,4 | 25,2 |
| motor | | 5,5 | 7,5 | | 11 | | | | 15 | | | 18,5 | | -* | | | |

*Fan test laboratory AMCA 210/99 Fig.12, Test Chamber. Performance certified is for installation type D - Ducted inlet, Ducted outlet. Performance ratings do not include the effects of appurtenances (accessories-belt cover, pulley & belt).*

*The A-weighted sound ratings shown have been calculated per AMCA International Standard 301. Values shown are for inlet LwiA sound power levels for installation Type D: ducted inlet, ducted outlet. Ratings include the effects of duct end correction.*

*Sound power frequency spectrum $L_{wrel}$ Page 54-55*

*Dimensions + Accessories Page 49-52*

# Performance Curve

## AXV 710, 50 Hz

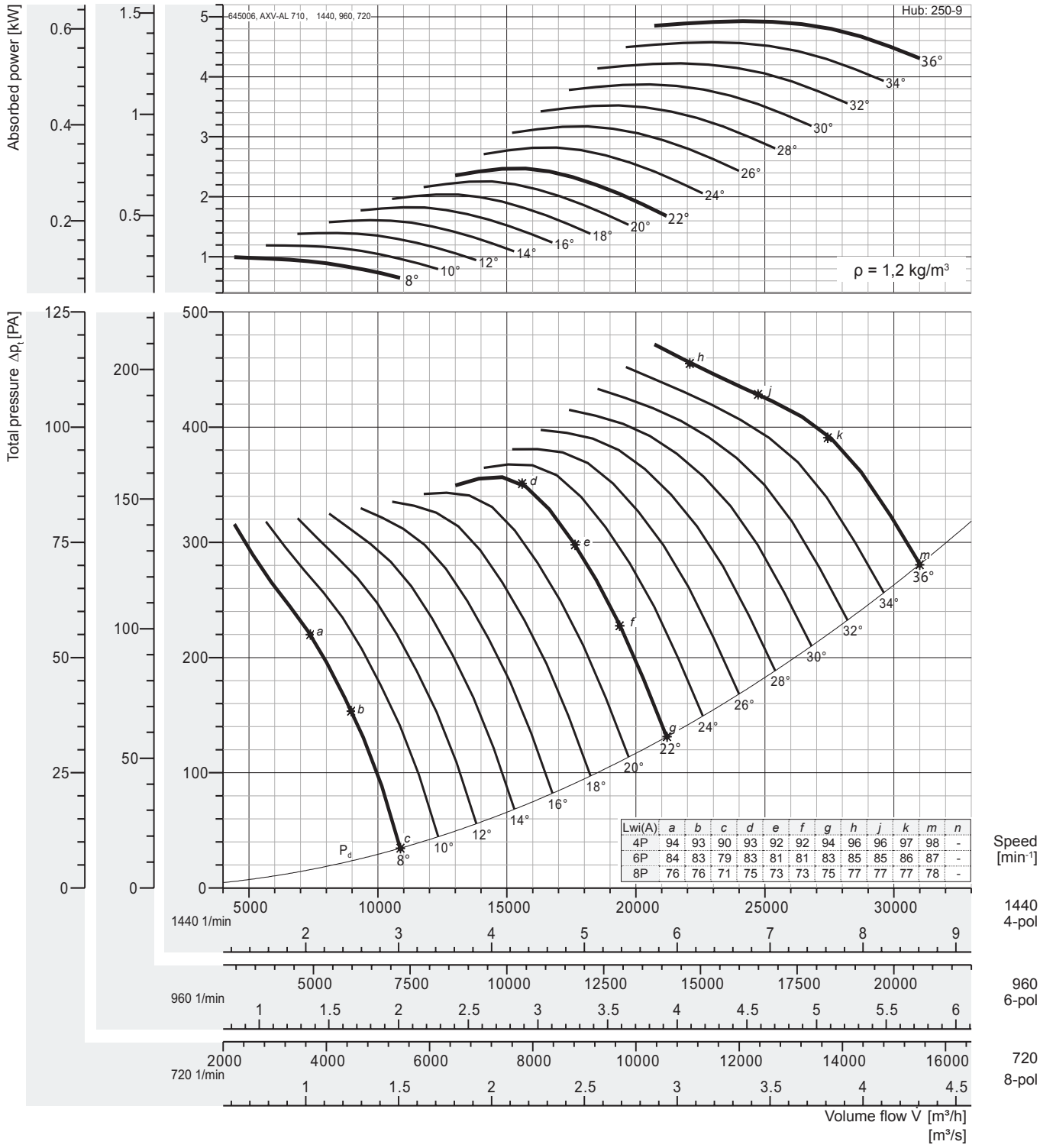


| Lwi(A) | a | b | c | d | e | f | g | h | j | k | m | n |
|---|---|---|---|---|---|---|---|---|---|---|---|---|
| 4P | 94 | 93 | 90 | 93 | 92 | 92 | 94 | 96 | 96 | 97 | 98 | - |
| 6P | 84 | 83 | 79 | 83 | 81 | 81 | 83 | 85 | 85 | 86 | 87 | - |
| 8P | 76 | 76 | 71 | 75 | 73 | 73 | 75 | 77 | 77 | 77 | 78 | - |

### Peak absorbed power [kW]

| n | Pitch angle [°] | | | | | | | | | | | | | | | | |
|---|---|---|---|---|---|---|---|---|---|---|---|---|---|---|---|---|---|
| [min⁻¹] | 8 | 10 | 12 | 14 | 16 | 18 | 20 | 22 | 24 | 26 | 28 | 30 | 32 | 34 | 36 | 38 | 40 |
| 720 | 0,125 | 0,149 | 0,175 | 0,201 | 0,228 | 0,255 | 0,282 | 0,309 | 0,353 | 0,397 | 0,440 | 0,484 | 0,528 | 0,572 | 0,616 | - | - |
| motor | 0,37 | | | | | | | | | 0,55 | | | | 0,75 | | | |
| 960 | 0,295 | 0,353 | 0,414 | 0,477 | 0,541 | 0,604 | 0,668 | 0,732 | 0,836 | 0,940 | 1,04 | 1,15 | 1,25 | 1,36 | 1,46 | - | - |
| motor | 0,37 | | 0,55 | | | 0,75 | | | 1,1 | | | 1,5 | | | | | |
| 1440 | 0,996 | 1,19 | 1,40 | 1,61 | 1,83 | 2,04 | 2,26 | 2,47 | 2,82 | 3,17 | 3,52 | 3,87 | 4,22 | 4,58 | 4,93 | - | - |
| motor | 1,1 | 1,5 | | 2,2 | | | 3 | | | 4 | | | 5,5 | | | | |

*Fan test laboratory AMCA 210/99 Fig.12, Test Chamber. Performance certified is for installation type D - Ducted inlet, Ducted outlet. Performance ratings do not include the effects of appurtenances (accessories-belt cover, pulley & belt).*

*The A-weighted sound ratings shown have been calculated per AMCA International Standard 301. Values shown are for inlet LwiA sound power levels for installation Type D: ducted inlet, ducted outlet. Ratings include the effects of duct end correction.*

*Sound power frequency spectrum $L_{wrel}$ Page 54-55*

*Dimensions + Accessories Page 49-52*

# Performance Curve

## AXV 800, 50 Hz

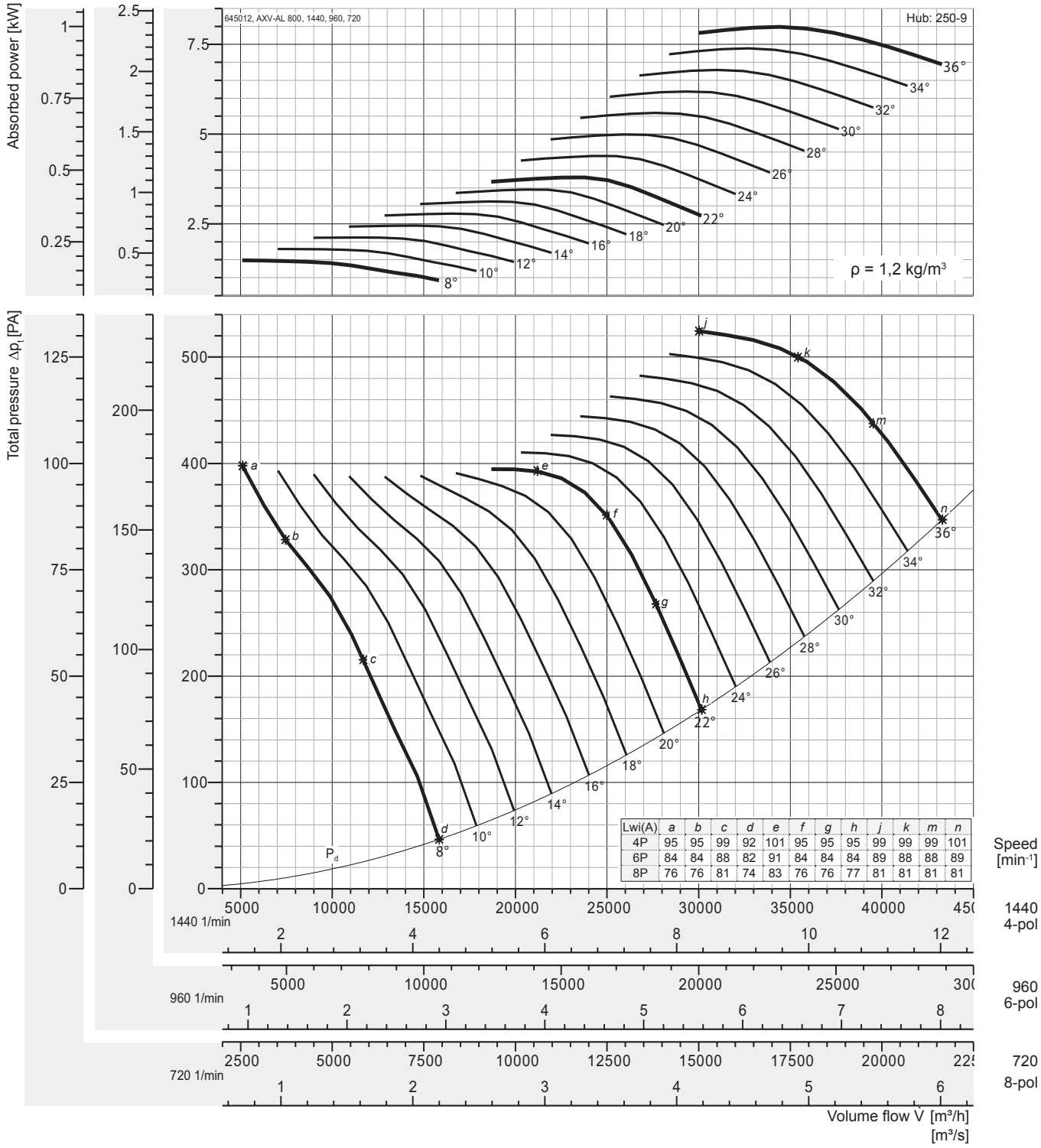


### Peak absorbed power [kW]

| n | Pitch angle [°] | | | | | | | | | | | | | | | | |
|---|---|---|---|---|---|---|---|---|---|---|---|---|---|---|---|---|---|
| [min⁻¹] | 8 | 10 | 12 | 14 | 16 | 18 | 20 | 22 | 24 | 26 | 28 | 30 | 32 | 34 | 36 | 38 | 40 |
| 720 | 0,186 | 0,225 | 0,265 | 0,306 | 0,348 | 0,390 | 0,432 | 0,474 | 0,549 | 0,624 | 0,699 | 0,774 | 0,849 | 0,924 | 0,999 | - | - |
| motor | 0,37 | | | | | 0,55 | | | | 0,75 | | 1,1 | | | | | |
| 960 | 0,440 | 0,533 | 0,628 | 0,726 | 0,825 | 0,925 | 1,02 | 1,12 | 1,30 | 1,48 | 1,66 | 1,83 | 2,01 | 2,19 | 2,37 | - | - |
| motor | 0,55 | | 0,75 | | 1,1 | | | 1,5 | | | 2,2 | | | | 3 | | |
| 1440 | 1,49 | 1,80 | 2,12 | 2,45 | 2,79 | 3,12 | 3,46 | 3,79 | 4,39 | 4,99 | 5,59 | 6,19 | 6,79 | 7,39 | 7,99 | - | - |
| motor | 1,5 | 2,2 | | 3 | | 4 | | | 5,5 | | 7,5 | | | | 11 | | |

*Fan test laboratory AMCA 210/99 Fig.12, Test Chamber. Performance certified is for installation type D - Ducted inlet, Ducted outlet. Performance ratings do not include the effects of appurtenances (accessories-belt cover, pulley & belt).*

*The A-weighted sound ratings shown have been calculated per AMCA International Standard 301. Values shown are for inlet LwiA sound power levels for installation Type D: ducted inlet, ducted outlet. Ratings include the effects of duct end correction.*

*Sound power frequency spectrum $L_{wrel}$ Page 54-55*

*Dimensions + Accessories Page 49-52*

# Performance Curve

## AXV 900, 50 Hz

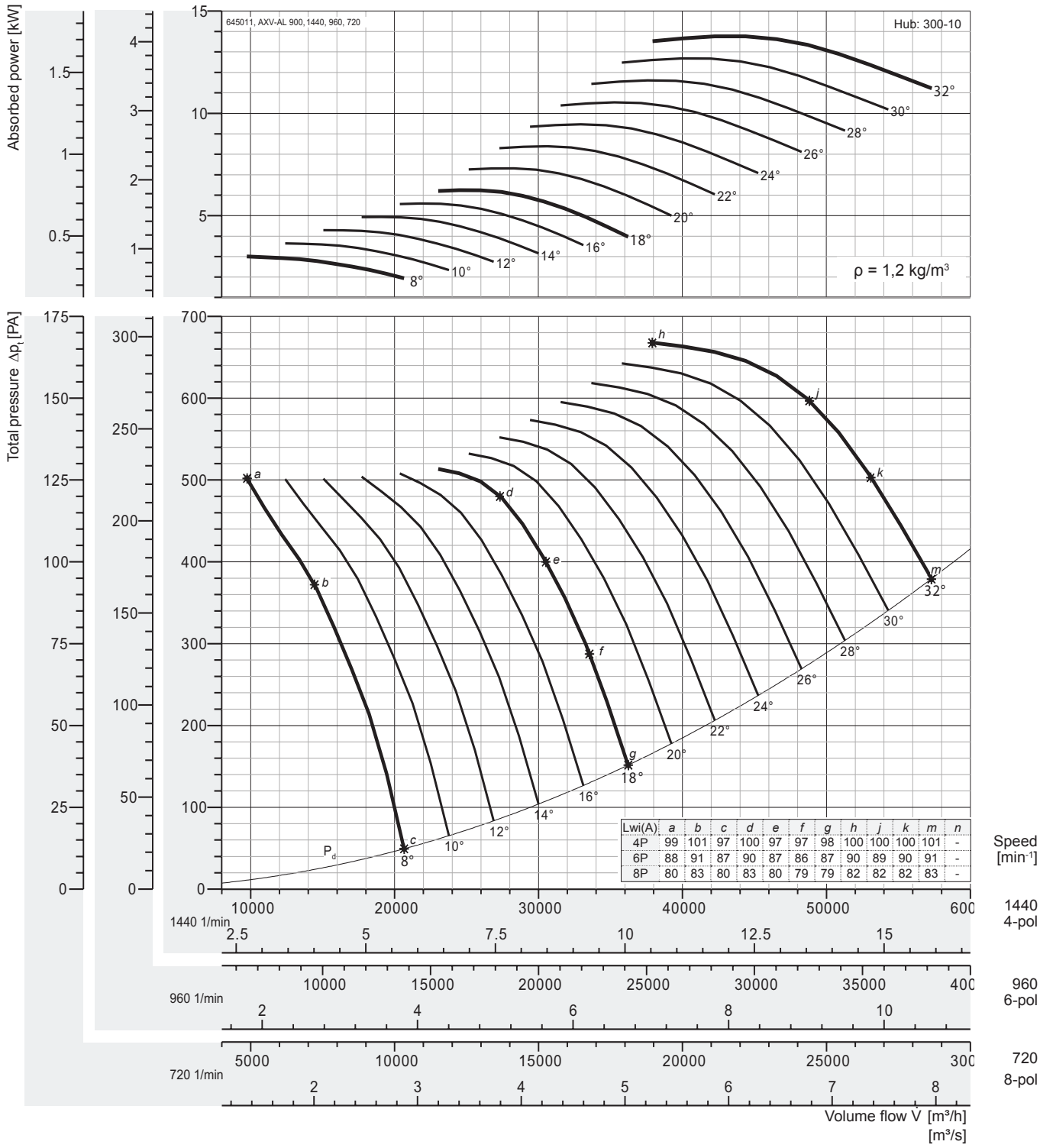


| Lwi(A) | a | b | c | d | e | f | g | h | j | k | m | n |
|---|---|---|---|---|---|---|---|---|---|---|---|---|
| 4P | 99 | 101 | 97 | 100 | 97 | 97 | 98 | 100 | 100 | 100 | 101 | - |
| 6P | 88 | 91 | 87 | 90 | 87 | 86 | 87 | 90 | 89 | 90 | 91 | - |
| 8P | 80 | 83 | 80 | 83 | 80 | 79 | 79 | 82 | 82 | 82 | 83 | - |

### Peak absorbed power [kW]

| n | Pitch angle [°] | | | | | | | | | | | | | | | | |
|---|---|---|---|---|---|---|---|---|---|---|---|---|---|---|---|---|---|
| [min⁻¹] | 8 | 10 | 12 | 14 | 16 | 18 | 20 | 22 | 24 | 26 | 28 | 30 | 32 | 34 | 36 | 38 | 40 |
| 720 | 0,376 | 0,456 | 0,536 | 0,617 | 0,699 | 0,780 | 0,914 | 1,05 | 1,18 | 1,32 | 1,45 | 1,59 | 1,72 | - | - | - | - |
| motor | 0,55 | | | 0,75 | | 1,1 | | | 1,5 | | | 2,2 | | | | | |
| 960 | 0,891 | 1,08 | 1,27 | 1,46 | 1,66 | 1,85 | 2,17 | 2,49 | 2,80 | 3,12 | 3,44 | 3,76 | 4,08 | - | - | - | - |
| motor | 1,1 | | 1,5 | | 2,2 | | | 3 | | 4 | | | 5,5 | | | | |
| 1440 | 3,01 | 3,64 | 4,30 | 4,93 | 5,59 | 6,24 | 7,31 | 8,39 | 9,46 | 10,5 | 11,6 | 12,7 | 13,8 | - | - | - | - |
| motor | 4 | | 5,5 | | 7,5 | | | 11 | | | 15 | | | | | | |

*Fan test laboratory AMCA 210/99 Fig.12, Test Chamber. Performance certified is for installation type D - Ducted inlet, Ducted outlet. Performance ratings do not include the effects of appurtenances (accessories-belt cover, pulley & belt).*

*The A-weighted sound ratings shown have been calculated per AMCA International Standard 301. Values shown are for inlet LwiA sound power levels for installation Type D: ducted inlet, ducted outlet. Ratings include the effects of duct end correction.*

*Sound power frequency spectrum $L_{wrel}$ Page 54-55*

*Dimensions + Accessories Page 49-52*

# Performance Curve

## AXV 1000, 50 Hz

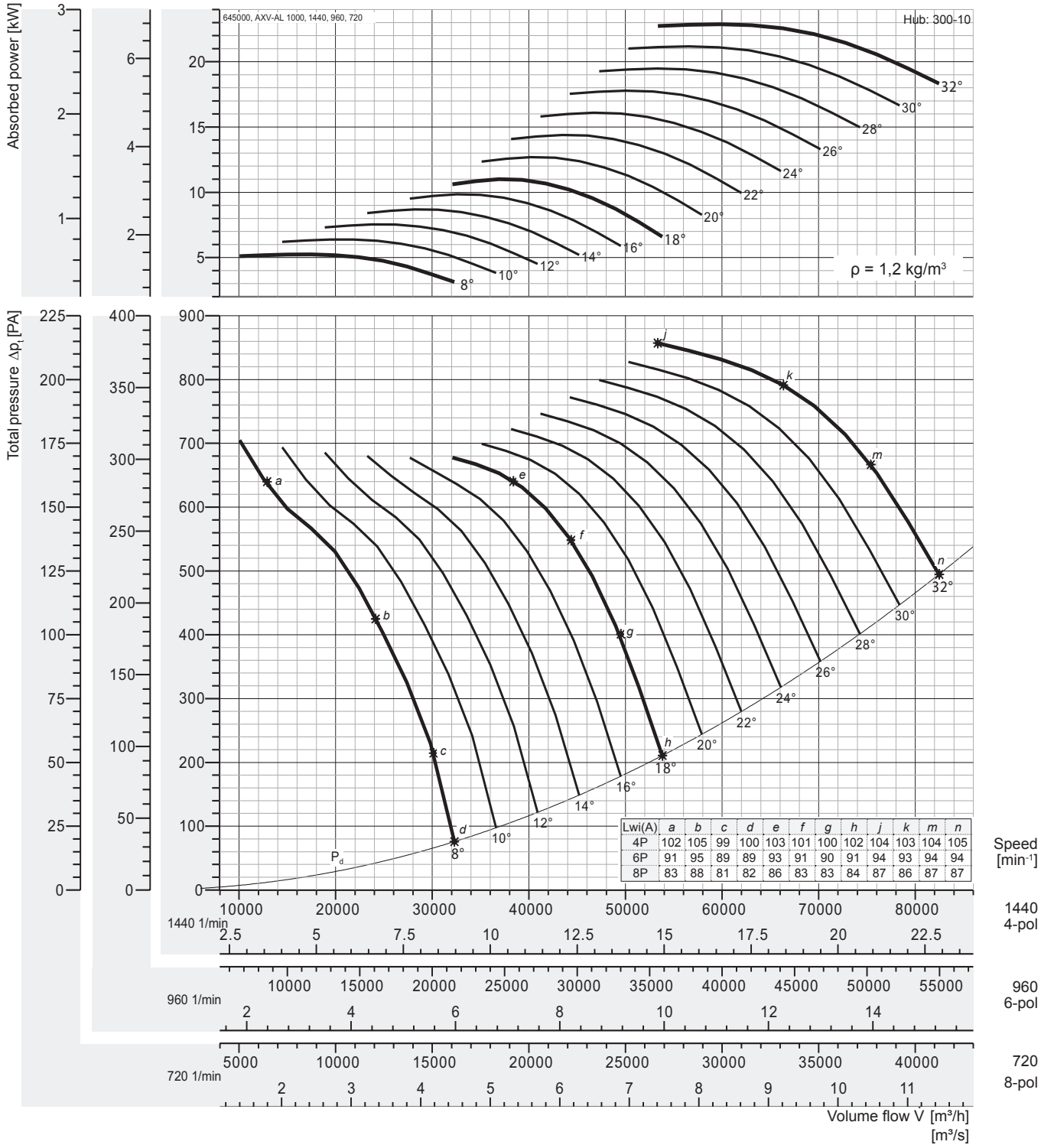


### Peak absorbed power [kW]

| n | Pitch angle [°] | | | | | | | | | | | | | | | | |
|---|---|---|---|---|---|---|---|---|---|---|---|---|---|---|---|---|---|
| [min⁻¹] | 8 | 10 | 12 | 14 | 16 | 18 | 20 | 22 | 24 | 26 | 28 | 30 | 32 | 34 | 36 | 38 | 40 |
| 720 | 0,654 | 0,798 | 0,942 | 1,09 | 1,23 | 1,38 | 1,59 | 1,80 | 2,01 | 2,22 | 2,44 | 2,65 | 2,86 | - | - | - | - |
| motor | 0,75 | 1,1 | | | 1,5 | | 2,2 | | | 3 | | | | | | | |
| 960 | 1,55 | 1,89 | 2,23 | 2,58 | 2,92 | 3,26 | 3,76 | 4,26 | 4,77 | 5,27 | 5,77 | 6,27 | 6,78 | - | - | - | - |
| motor | 2,2 | | 3 | | | 4 | | 5,5 | | | 7,5 | | | | | | |
| 1440 | 5,23 | 6,38 | 7,54 | 8,69 | 9,85 | 11,0 | 12,7 | 14,4 | 16,1 | 17,8 | 19,5 | 21,2 | 22,9 | - | - | - | - |
| motor | 5,5 | 7,5 | 11 | | | | 15 | | 18,5 | | 22 | | 30 | | | | |

*Fan test laboratory AMCA 210/99 Fig.12, Test Chamber. Performance certified is for installation type D - Ducted inlet, Ducted outlet. Performance ratings do not include the effects of appurtenances (accessories-belt cover, pulley & belt).*

*The A-weighted sound ratings shown have been calculated per AMCA International Standard 301. Values shown are for inlet LwiA sound power levels for installation Type D: ducted inlet, ducted outlet. Ratings include the effects of duct end correction.*

*Sound power frequency spectrum $L_{wrel}$ Page 54-55*

*Dimensions + Accessories Page 49-52*

# Performance Curve

## AXV 1120, 50 Hz

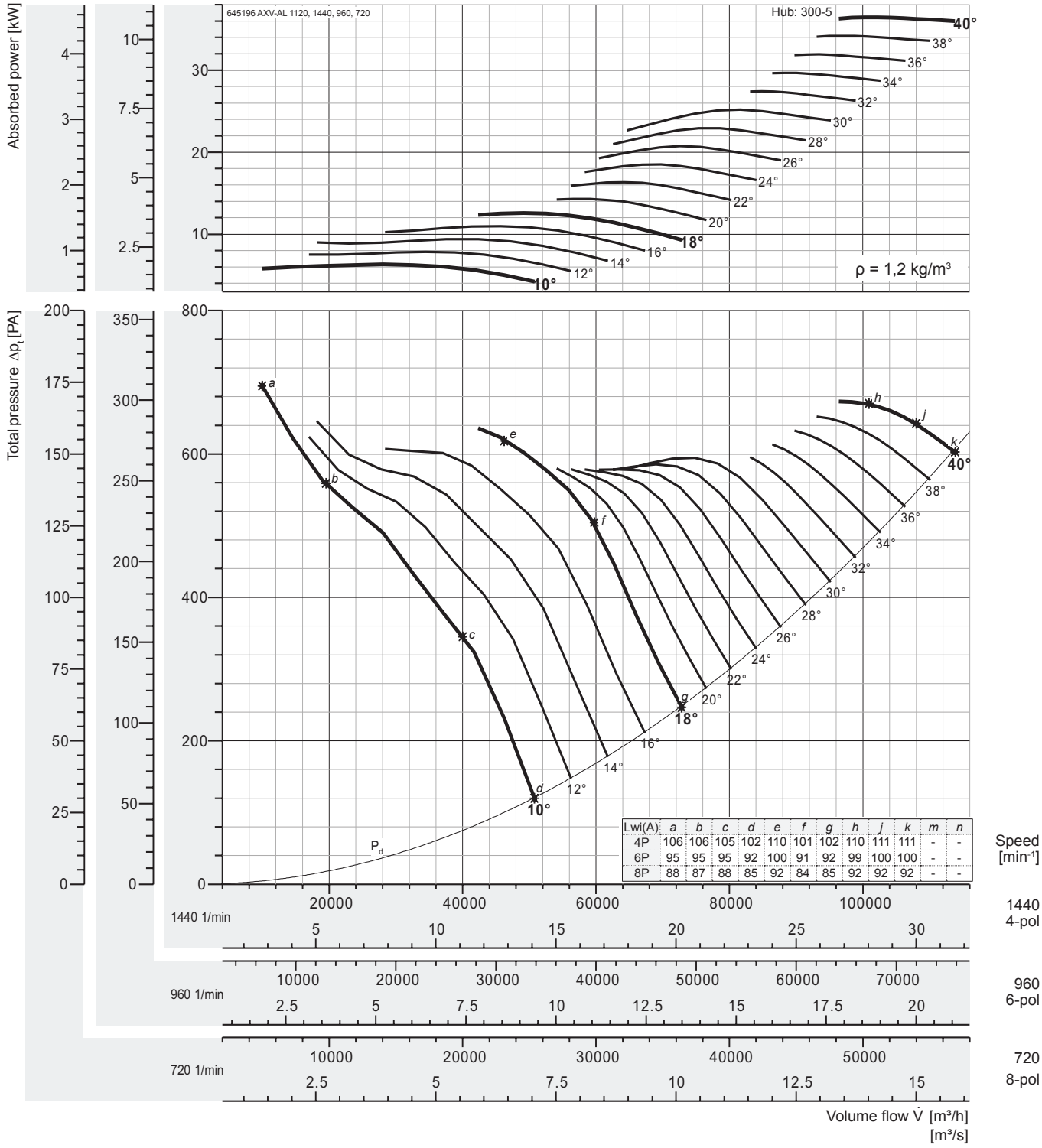


| Lwi(A) | a | b | c | d | e | f | g | h | j | k | m | n |
|---|---|---|---|---|---|---|---|---|---|---|---|---|
| 4P | 106 | 106 | 105 | 102 | 110 | 101 | 102 | 110 | 111 | 111 | - | - |
| 6P | 95 | 95 | 95 | 92 | 100 | 91 | 92 | 99 | 100 | 100 | - | - |
| 8P | 88 | 87 | 88 | 85 | 92 | 84 | 85 | 92 | 92 | 92 | - | - |

### Peak absorbed power [kW]

| n | Pitch angle [°] | | | | | | | | | | | | | | | | |
|---|---|---|---|---|---|---|---|---|---|---|---|---|---|---|---|---|---|
| [min⁻¹] | 8 | 10 | 12 | 14 | 16 | 18 | 20 | 22 | 24 | 26 | 28 | 30 | 32 | 34 | 36 | 38 | 40 |
| 720 | - | 0,789 | 0,98 | 1,17 | 1,37 | 1,57 | 1,78 | 2,04 | 2,32 | 2,59 | 2,87 | 3,15 | 3,43 | 3,71 | 3,99 | 4,27 | 4,56 |
| motor | | 1,1 | | 1,5 | | 2,2 | | | 3 | | | 4 | | | | 5,5 | |
| 960 | - | 1,87 | 2,32 | 2,78 | 3,25 | 3,73 | 4,23 | 4,85 | 5,49 | 6,14 | 6,79 | 7,46 | 8,13 | 8,79 | 9,46 | 10,1 | 10,8 |
| motor | | 2,2 | 3 | | 4 | | 5,5 | | | 7,5 | | | 11 | | | | |
| 1440 | - | 6,31 | 7,85 | 9,39 | 11,0 | 12,6 | 14,3 | 16,4 | 18,5 | 20,7 | 22,9 | 25,2 | 27,4 | 29,7 | 31,9 | 34,2 | 36,4 |
| motor | | 7,5 | 11 | | | 15 | | 18,5 | | 22 | 30 | | | | 37 | | |

*Fan test laboratory AMCA 210/99 Fig.12, Test Chamber. Performance certified is for installation type D - Ducted inlet, Ducted outlet. Performance ratings do not include the effects of appurtenances (accessories-belt cover, pulley & belt).*

*The A-weighted sound ratings shown have been calculated per AMCA International Standard 301. Values shown are for inlet LwiA sound power levels for installation Type D: ducted inlet, ducted outlet. Ratings include the effects of duct end correction.*

*Sound power frequency spectrum $L_{wrel}$ Page 54-55*

*Dimensions + Accessories Page 49-52*

# Performance Curve

## AXV 1250, 50 Hz

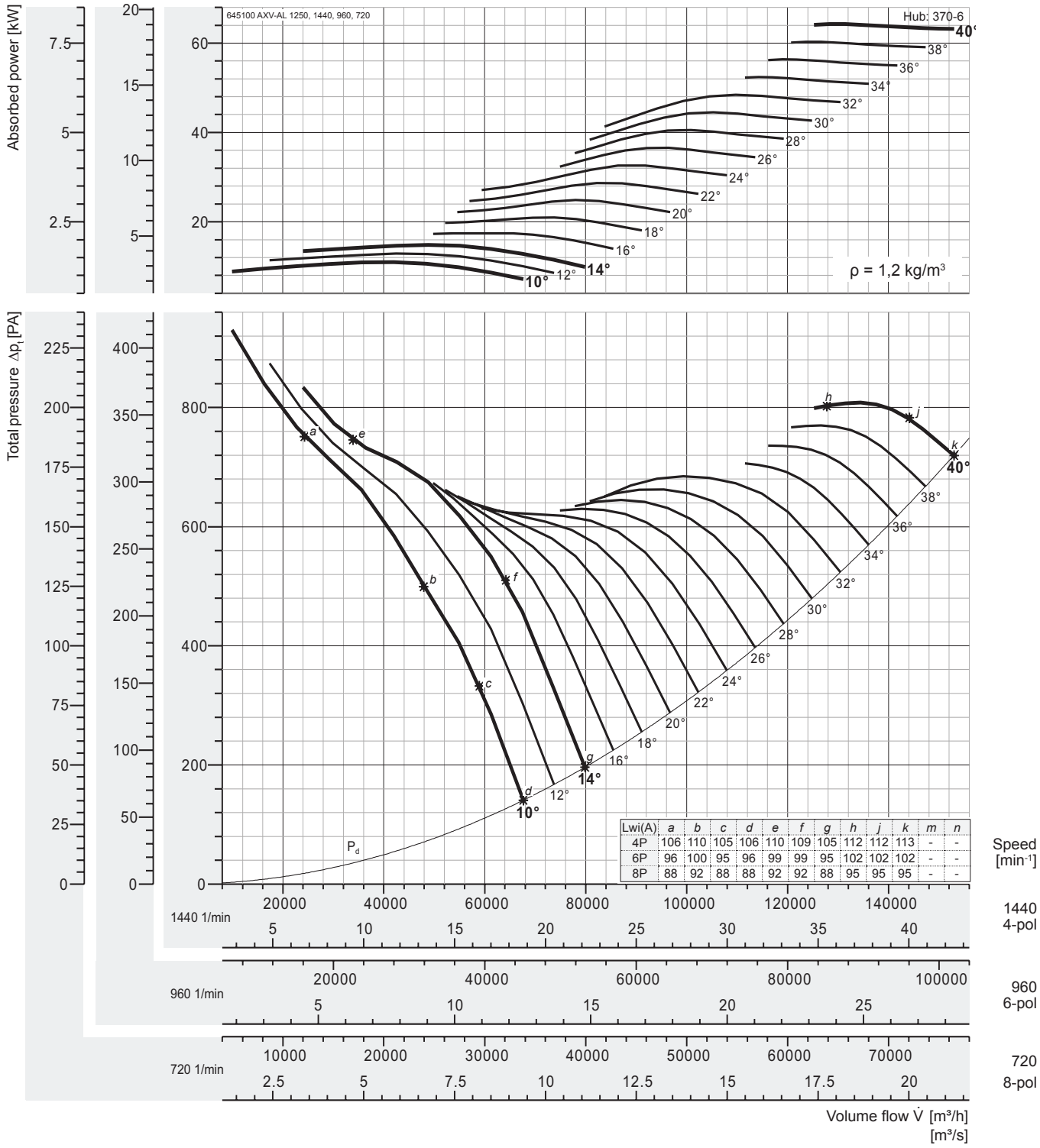


| Lwi(A) | a | b | c | d | e | f | g | h | j | k | m | n |
|---|---|---|---|---|---|---|---|---|---|---|---|---|
| 4P | 106 | 110 | 105 | 106 | 110 | 109 | 105 | 112 | 112 | 113 | - | - |
| 6P | 96 | 100 | 95 | 96 | 99 | 99 | 95 | 102 | 102 | 102 | - | - |
| 8P | 88 | 92 | 88 | 88 | 92 | 92 | 88 | 95 | 95 | 95 | - | - |

### Peak absorbed power [kW]

| n | Pitch angle [°] | | | | | | | | | | | | | | | | |
|---|---|---|---|---|---|---|---|---|---|---|---|---|---|---|---|---|---|
| [min⁻¹] | 8 | 10 | 12 | 14 | 16 | 18 | 20 | 22 | 24 | 26 | 28 | 30 | 32 | 34 | 36 | 38 | 40 |
| 720 | - | 1,38 | 1,61 | 1,86 | 2,18 | 2,63 | 3,11 | 3,59 | 4,08 | 4,57 | 5,07 | 5,57 | 6,06 | 6,55 | 7,05 | 7,54 | 8,03 |
| motor | | 1,5 | 2,2 | | | 3 | 4 | | 5,5 | | | 7,5 | | | | 11 | |
| 960 | - | 3,26 | 3,82 | 4,40 | 5,17 | 6,23 | 7,37 | 8,51 | 9,66 | 10,8 | 12,0 | 13,2 | 14,4 | 15,5 | 16,7 | 17,9 | 19,0 |
| motor | | 4 | | 5,5 | | 7,5 | | 11 | | | 15 | | | 18,5 | | | 22 |
| 1440 | - | 11,0 | 12,9 | 14,8 | 17,5 | 21,0 | 24,9 | 28,7 | 32,6 | 36,6 | 40,6 | 44,5 | 48,5 | 52,4 | 56,4 | 60,3 | 64,3 |
| motor | | 11 | 15 | | 18,5 | 22 | 30 | | 37 | | 45 | | 55 | | 75 | | |

*Fan test laboratory AMCA 210/99 Fig.12, Test Chamber. Performance certified is for installation type D - Ducted inlet, Ducted outlet. Performance ratings do not include the effects of appurtenances (accessories-belt cover, pulley & belt).*

*The A-weighted sound ratings shown have been calculated per AMCA International Standard 301. Values shown are for inlet LwiA sound power levels for installation Type D: ducted inlet, ducted outlet. Ratings include the effects of duct end correction.*

*Sound power frequency spectrum $L_{wrel}$ Page 54-55*

*Dimensions + Accessories Page 49-52*

# Performance Curve

## AXV 1400, 50 Hz

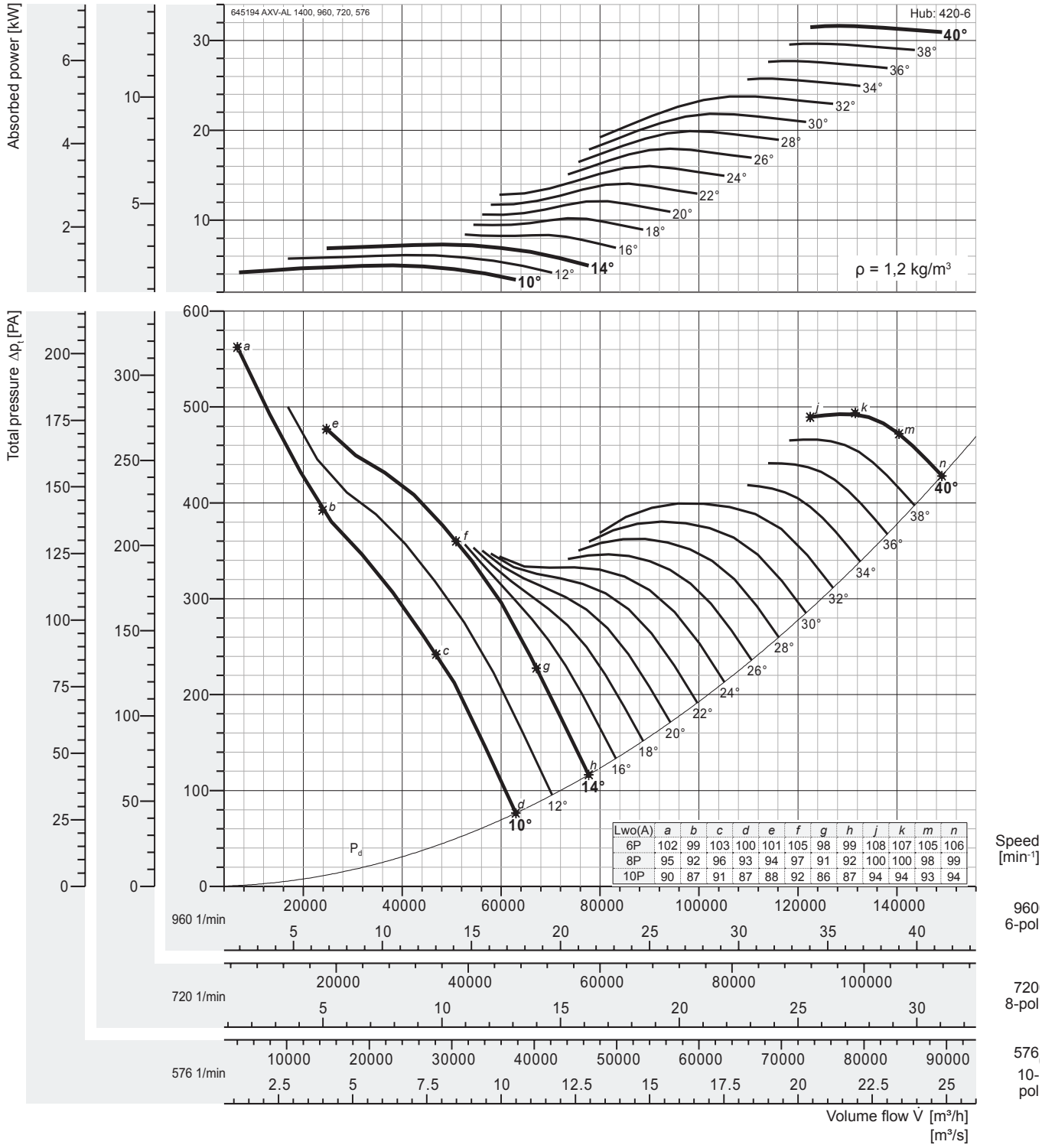


| Lwo(A) | a | b | c | d | e | f | g | h | j | k | m | n |
|---|---|---|---|---|---|---|---|---|---|---|---|---|
| 6P | 102 | 99 | 103 | 100 | 101 | 105 | 98 | 99 | 108 | 107 | 105 | 106 |
| 8P | 95 | 92 | 96 | 93 | 94 | 97 | 91 | 92 | 100 | 100 | 98 | 99 |
| 10P | 90 | 87 | 91 | 87 | 88 | 92 | 86 | 87 | 94 | 94 | 93 | 94 |

### Peak absorbed power [kW]

| n | Pitch angle [°] | | | | | | | | | | | | | | | | |
|---|---|---|---|---|---|---|---|---|---|---|---|---|---|---|---|---|---|
| [min⁻¹] | 8 | 10 | 12 | 14 | 16 | 18 | 20 | 22 | 24 | 26 | 28 | 30 | 32 | 34 | 36 | 38 | 40 |
| 576 | - | 1,08 | 1,33 | 1,58 | 1,81 | 2,20 | 2,62 | 3,04 | 3,46 | 3,88 | 4,30 | 4,72 | 5,13 | 5,56 | 5,98 | 6,41 | 6,83 |
| motor | | 1,1 | 1,5 | 2,2 | | | 3 | | 4 | | | 5,5 | | | | 7,5 | |
| 720 | - | 2,10 | 2,59 | 3,09 | 3,54 | 4,31 | 5,11 | 5,94 | 6,76 | 7,58 | 8,40 | 9,21 | 10,0 | 10,9 | 11,7 | 12,5 | 13,3 |
| motor | | 2,2 | 3 | 4 | | 5,5 | | | 7,5 | | | 11 | | | | 15 | |
| 960 | - | 4,98 | 6,14 | 7,32 | 8,40 | 10,2 | 12,1 | 14,1 | 16,0 | 18,0 | 19,9 | 21,8 | 23,8 | 25,7 | 27,7 | 29,7 | 31,6 |
| motor | | 5,5 | 7,5 | | 11 | | 15 | | | 18,5 | | 22 | | 30 | | | 37 |

*Fan test laboratory AMCA 210/99 Fig.15, Test Chamber. Performance certified is for installation type A - Free inlet, Free outlet. Performance ratings do not include the effects of appurtenances (accessories-belt cover, pulley & belt).*

*The A-weighted sound ratings shown have been calculated per AMCA International Standard 301. Values shown are for outlet LwoA sound power levels for installation Type A: free inlet, free outlet.*

*Sound power frequency spectrum $L_{wrel}$ Page 54-55*

*Dimensions + Accessories Page 49-52*

# Performance Curve

## AXV 1600, 50 Hz

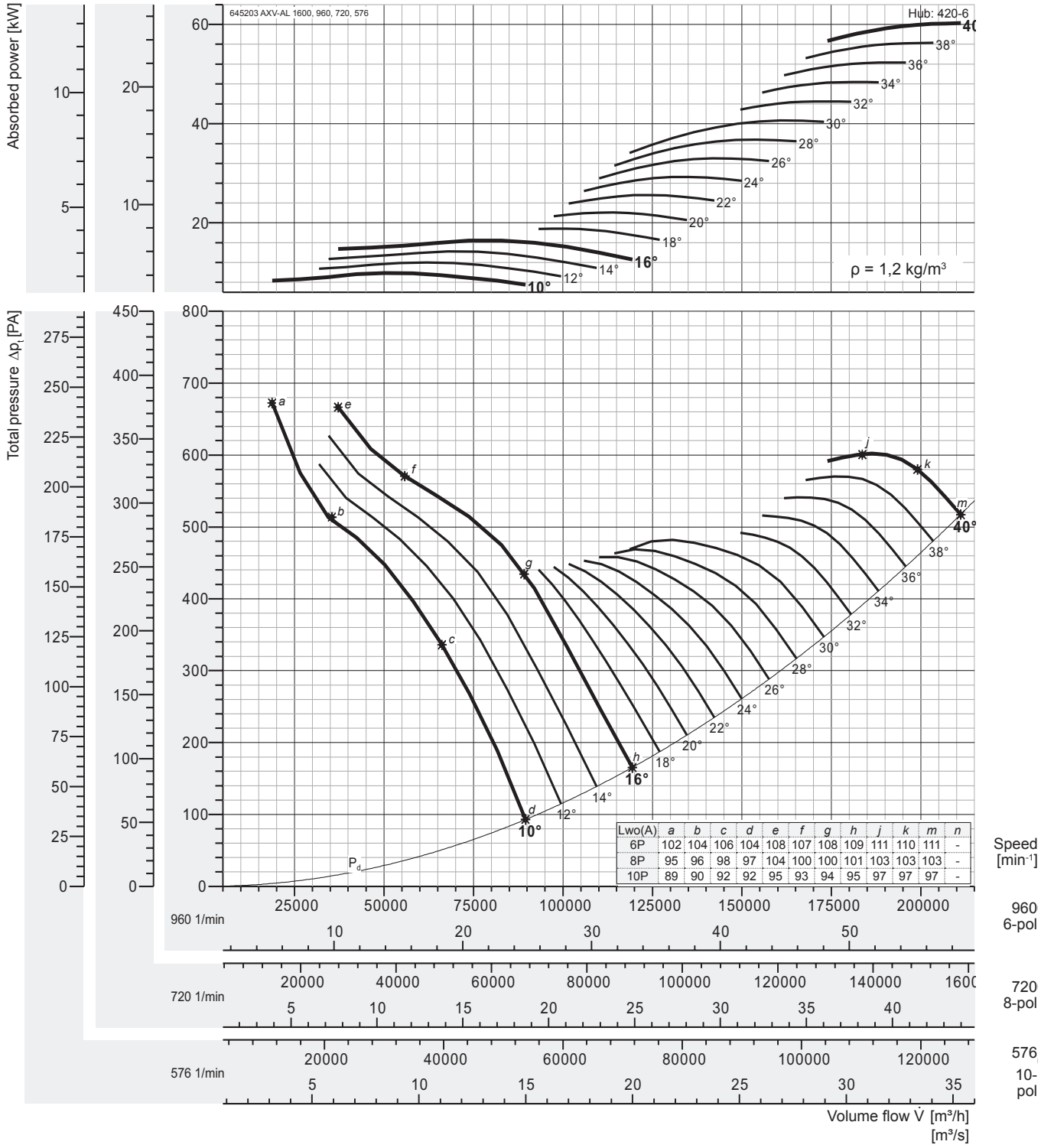


| Lwo(A) | a | b | c | d | e | f | g | h | j | k | m | n |
|---|---|---|---|---|---|---|---|---|---|---|---|---|
| 6P | 102 | 104 | 106 | 104 | 108 | 107 | 108 | 109 | 111 | 110 | 111 | - |
| 8P | 95 | 96 | 98 | 97 | 104 | 100 | 100 | 101 | 103 | 103 | 103 | - |
| 10P | 89 | 90 | 92 | 92 | 95 | 93 | 94 | 95 | 97 | 97 | 97 | - |

### Peak absorbed power [kW]

| n | Pitch angle [°] | | | | | | | | | | | | | | | | |
|---|---|---|---|---|---|---|---|---|---|---|---|---|---|---|---|---|---|
| [min⁻¹] | 8 | 10 | 12 | 14 | 16 | 18 | 20 | 22 | 24 | 26 | 28 | 30 | 32 | 34 | 36 | 38 | 40 |
| 576 | - | 2,13 | 2,60 | 3,07 | 3,55 | 4,07 | 4,77 | 5,53 | 6,32 | 7,13 | 7,95 | 8,78 | 9,61 | 10,5 | 11,3 | 12,1 | 13,0 |
| motor | | 2,2 | 3 | 4 | | 5,5 | | 7,5 | | | 11 | | | | 15 | | |
| 720 | - | 4,16 | 5,08 | 6,00 | 6,94 | 7,94 | 9,32 | 10,8 | 12,3 | 13,9 | 15,5 | 17,1 | 18,8 | 20,4 | 22,0 | 23,8 | 25,4 |
| motor | | 5,5 | | 7,5 | | 11 | | | 15 | | 18,5 | | 22 | | | 30 | |
| 960 | - | 9,86 | 12,0 | 14,2 | 16,4 | 18,8 | 22,0 | 25,6 | 29,3 | 33,0 | 36,8 | 40,6 | 44,5 | 48,4 | 52,3 | 56,3 | 60,3 |
| motor | | 11 | 15 | | 18,5 | 22 | | 30 | | 37 | | 45 | | 55 | | 75 | |

*Fan test laboratory AMCA 210/99 Fig.15, Test Chamber. Performance certified is for installation type A - Free inlet, Free outlet. Performance ratings do not include the effects of appurtenances (accessories-belt cover, pulley & belt).*

*The A-weighted sound ratings shown have been calculated per AMCA International Standard 301. Values shown are for outlet LwoA sound power levels for installation Type A: free inlet, free outlet.*

*Sound power frequency spectrum $L_{wrel}$ Page 54-55*

*Dimensions + Accessories Page 49-52*

# Performance Curve

## AXV 1800, 50 Hz

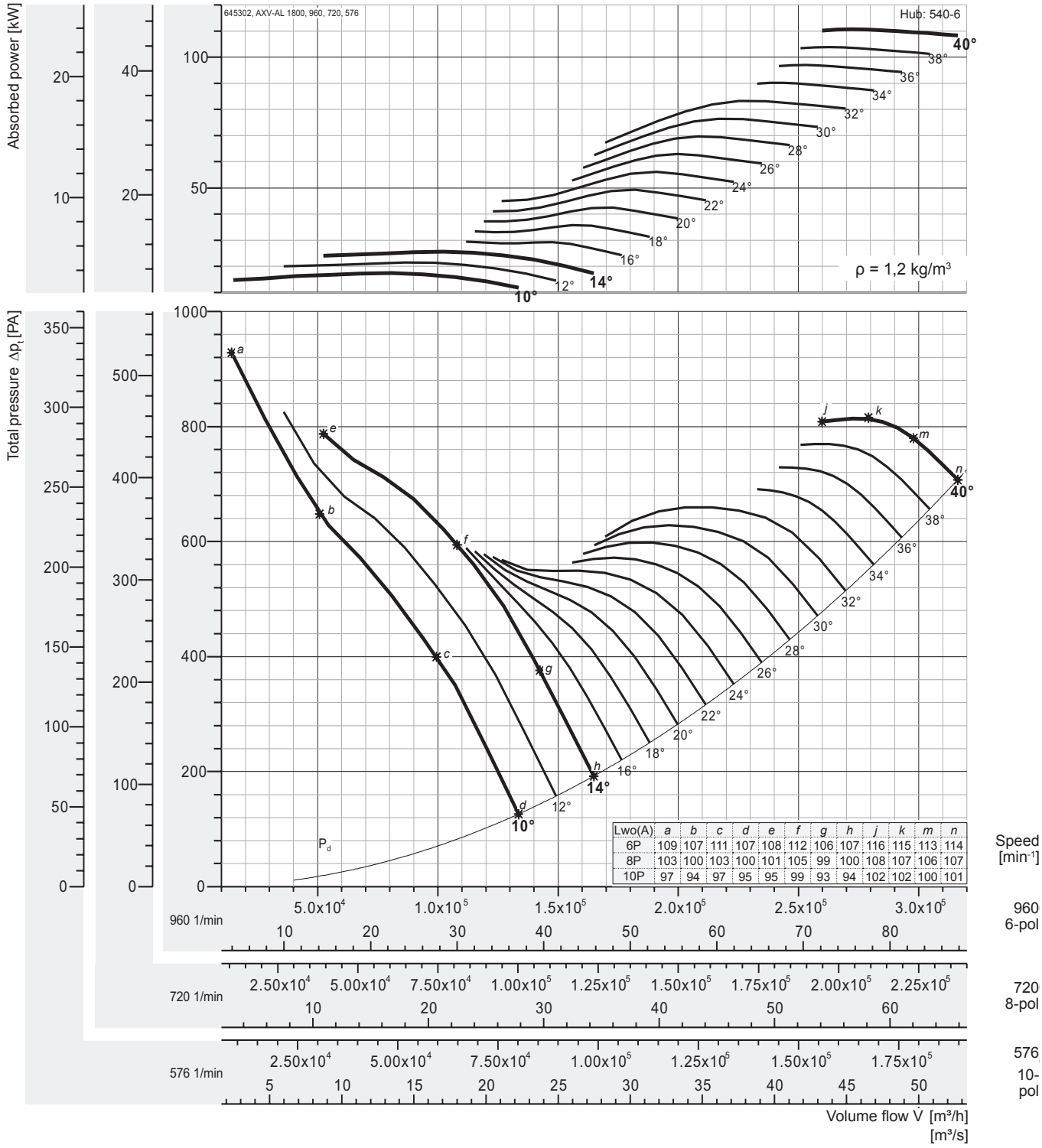


### Peak absorbed power [kW]

| n | Pitch angle [°] | | | | | | | | | | | | | | | | |
|---|---|---|---|---|---|---|---|---|---|---|---|---|---|---|---|---|---|
| [min⁻¹] | 8 | 10 | 12 | 14 | 16 | 18 | 20 | 22 | 24 | 26 | 28 | 30 | 32 | 34 | 36 | 38 | 40 |
| 576 | - | 3,76 | 4,64 | 5,54 | 6,36 | 7,73 | 9,17 | 10,6 | 12,1 | 13,6 | 15,0 | 16,5 | 18,0 | 19,5 | 20,9 | 22,4 | 23,9 |
| motor | | 4 | 5,5 | 7,5 | | 11 | | | 15 | | | 18,5 | | 22 | | 30 | |
| 720 | - | 7,35 | 9,07 | 10,8 | 12,4 | 15,0 | 17,9 | 20,8 | 23,7 | 26,6 | 29,4 | 32,3 | 35,1 | 38,0 | 40,9 | 43,8 | 46,7 |
| motor | | 7,5 | 11 | | 15 | | 18,5 | 22 | 30 | | | 37 | | 45 | | | 55 |
| 960 | - | 17,4 | 21,5 | 25,6 | 29,4 | 35,8 | 42,4 | 49,3 | 56,1 | 62,9 | 69,7 | 76,5 | 83,2 | 90,2 | 97,0 | 103,8 | 110,7 |
| motor | | 18,5 | 22 | 30 | | 37 | 45 | 55 | 75 | | | 90 | | 110 | | | 132 |

*Fan test laboratory AMCA 210/99 Fig.15, Test Chamber. Performance certified is for installation type A - Free inlet, Free outlet. Performance ratings do not include the effects of appurtenances (accessories-belt cover, pulley & belt).*

*The A-weighted sound ratings shown have been calculated per AMCA International Standard 301. Values shown are for outlet LwoA sound power levels for installation Type A: free inlet, free outlet.*

*Sound power frequency spectrum $L_{wrel}$ Page 54-55*

*Dimensions + Accessories Page 49-52*

# Performance Curve

## AXV 2000, 50 Hz

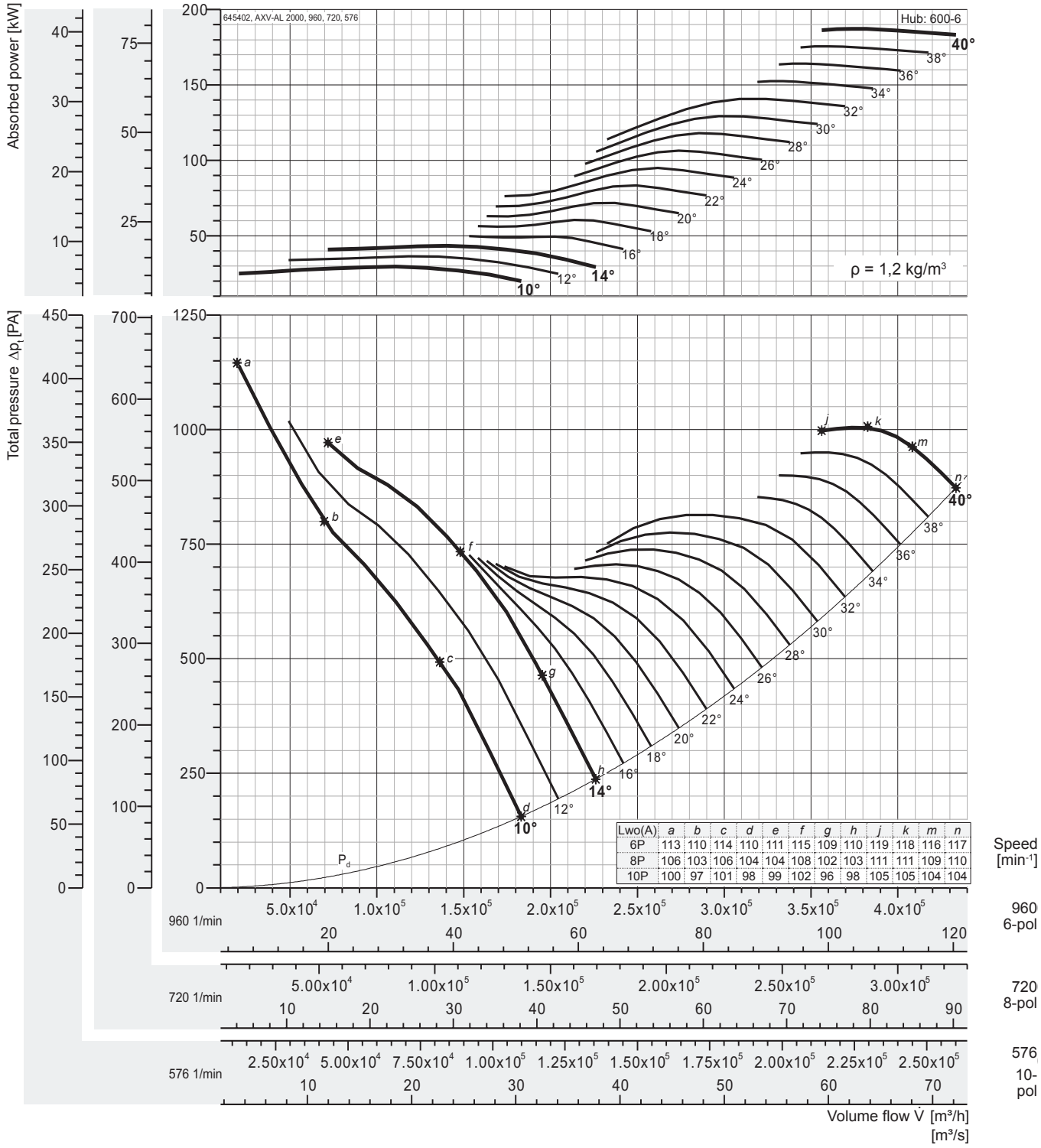


| Lwo(A) | a | b | c | d | e | f | g | h | j | k | m | n |
|---|---|---|---|---|---|---|---|---|---|---|---|---|
| 6P | 113 | 110 | 114 | 110 | 111 | 115 | 109 | 110 | 119 | 118 | 116 | 117 |
| 8P | 106 | 103 | 106 | 104 | 104 | 108 | 102 | 103 | 111 | 111 | 109 | 110 |
| 10P | 100 | 97 | 101 | 98 | 99 | 102 | 96 | 98 | 105 | 105 | 104 | 104 |

### Peak absorbed power [kW]

| n | Pitch angle [°] | | | | | | | | | | | | | | | | |
|---|---|---|---|---|---|---|---|---|---|---|---|---|---|---|---|---|---|
| [min⁻¹] | 8 | 10 | 12 | 14 | 16 | 18 | 20 | 22 | 24 | 26 | 28 | 30 | 32 | 34 | 36 | 38 | 40 |
| 576 | - | 6,37 | 7,85 | 9,36 | 10,7 | 13,1 | 15,5 | 18,0 | 20,5 | 23,0 | 25,5 | 27,9 | 30,4 | 32,9 | 35,4 | 37,9 | 40,4 |
| motor | | 7,5 | 11 | | | 15 | 18,5 | | 22 | 30 | | | 37 | | | 45 | |
| 720 | - | 12,4 | 15,3 | 18,3 | 21,0 | 25,5 | 30,3 | 35,2 | 40,0 | 44,9 | 49,8 | 54,6 | 59,4 | 64,4 | 69,2 | 74,1 | 79,0 |
| motor | | 15 | 18,5 | | 22 | 30 | 37 | | 45 | | 55 | | 75 | | | | 90 |
| 960 | - | 29,5 | 36,3 | 43,3 | 49,8 | 60,5 | 71,8 | 83,4 | 94,9 | 106,4 | 117,9 | 129,4 | 140,8 | 152,5 | 164,1 | 175,7 | 187,3 |
| motor | | 30 | 37 | 45 | 55 | 75 | | 90 | 110 | | 132 | | 160 | | 200 | | |

*Fan test laboratory AMCA 210/99 Fig.15, Test Chamber. Performance certified is for installation type A - Free inlet, Free outlet. Performance ratings do not include the effects of appurtenances (accessories-belt cover, pulley & belt).*

*The A-weighted sound ratings shown have been calculated per AMCA International Standard 301. Values shown are for outlet LwoA sound power levels for installation Type A: free inlet, free outlet.*

*Sound power frequency spectrum $L_{wrel}$ Page 54-55*

*Dimensions + Accessories Page 49-52*

# Performance Curve

## AXV 2200, 50 Hz

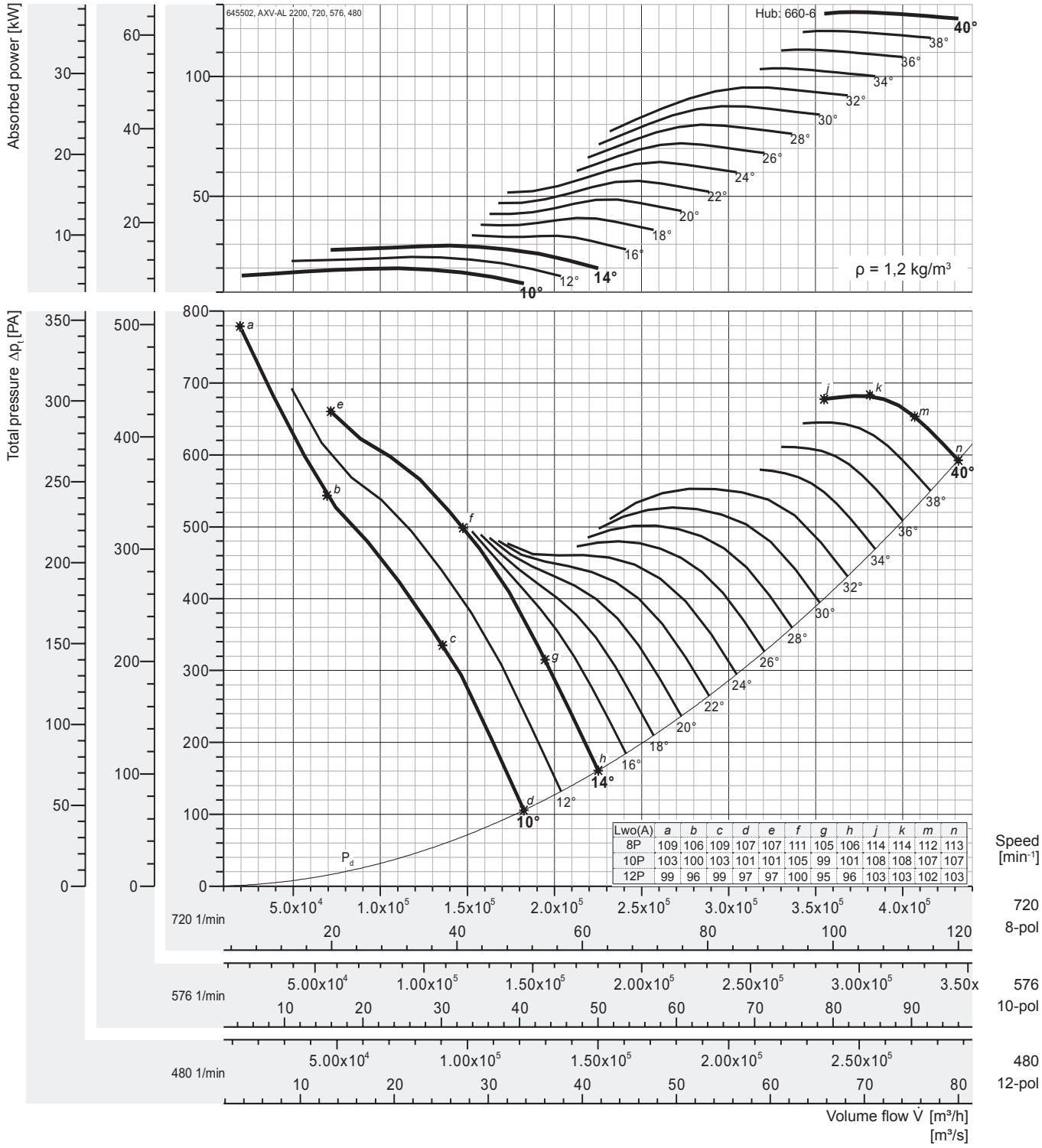


| Lwo(A) | a | b | c | d | e | f | g | h | j | k | m | n |
|---|---|---|---|---|---|---|---|---|---|---|---|---|
| 8P | 109 | 106 | 109 | 107 | 107 | 111 | 105 | 106 | 114 | 114 | 112 | 113 |
| 10P | 103 | 100 | 103 | 101 | 101 | 105 | 99 | 101 | 108 | 108 | 107 | 107 |
| 12P | 99 | 96 | 99 | 97 | 97 | 100 | 95 | 96 | 103 | 103 | 102 | 103 |

### Peak absorbed power [kW]

| n | Pitch angle [°] | | | | | | | | | | | | | | | | |
|---|---|---|---|---|---|---|---|---|---|---|---|---|---|---|---|---|---|
| [min⁻¹] | 8 | 10 | 12 | 14 | 16 | 18 | 20 | 22 | 24 | 26 | 28 | 30 | 32 | 34 | 36 | 38 | 40 |
| 480 | - | 5,92 | 7,30 | 8,70 | 9,99 | 12,1 | 14,4 | 16,7 | 19,1 | 21,4 | 23,7 | 26,0 | 28,3 | 30,6 | 32,9 | 35,3 | 37,6 |
| motor | | 7,5 | | 11 | | 15 | | 18,5 | 22 | | 30 | | | 37 | | | 45 |
| 576 | - | 10,2 | 12,6 | 15,0 | 17,3 | 21,0 | 24,9 | 28,9 | 32,9 | 36,9 | 40,9 | 44,9 | 48,8 | 52,9 | 56,9 | 60,9 | 64,9 |
| motor | | 11 | 15 | | 18,5 | 22 | 30 | | 37 | | 45 | | 55 | | 75 | | |
| 720 | - | 20,0 | 24,6 | 29,4 | 33,7 | 41,0 | 48,6 | 56,5 | 64,3 | 72,1 | 79,9 | 87,6 | 95,4 | 103,3 | 111,1 | 119,0 | 126,8 |
| motor | | 22 | 30 | | 37 | 45 | 55 | 75 | | | 90 | | 110 | | 132 | | |

*Fan test laboratory AMCA 210/99 Fig.15, Test Chamber. Performance certified is for installation type A - Free inlet, Free outlet. Performance ratings do not include the effects of appurtenances (accessories-belt cover, pulley & belt).*

*The A-weighted sound ratings shown have been calculated per AMCA International Standard 301. Values shown are for outlet LwoA sound power levels for installation Type A: free inlet, free outlet.*

*Sound power frequency spectrum $L_{wrel}$ Page 54-55*

*Dimensions + Accessories Page 49-52*

# Performance Curve

## AXV 2400, 50 Hz

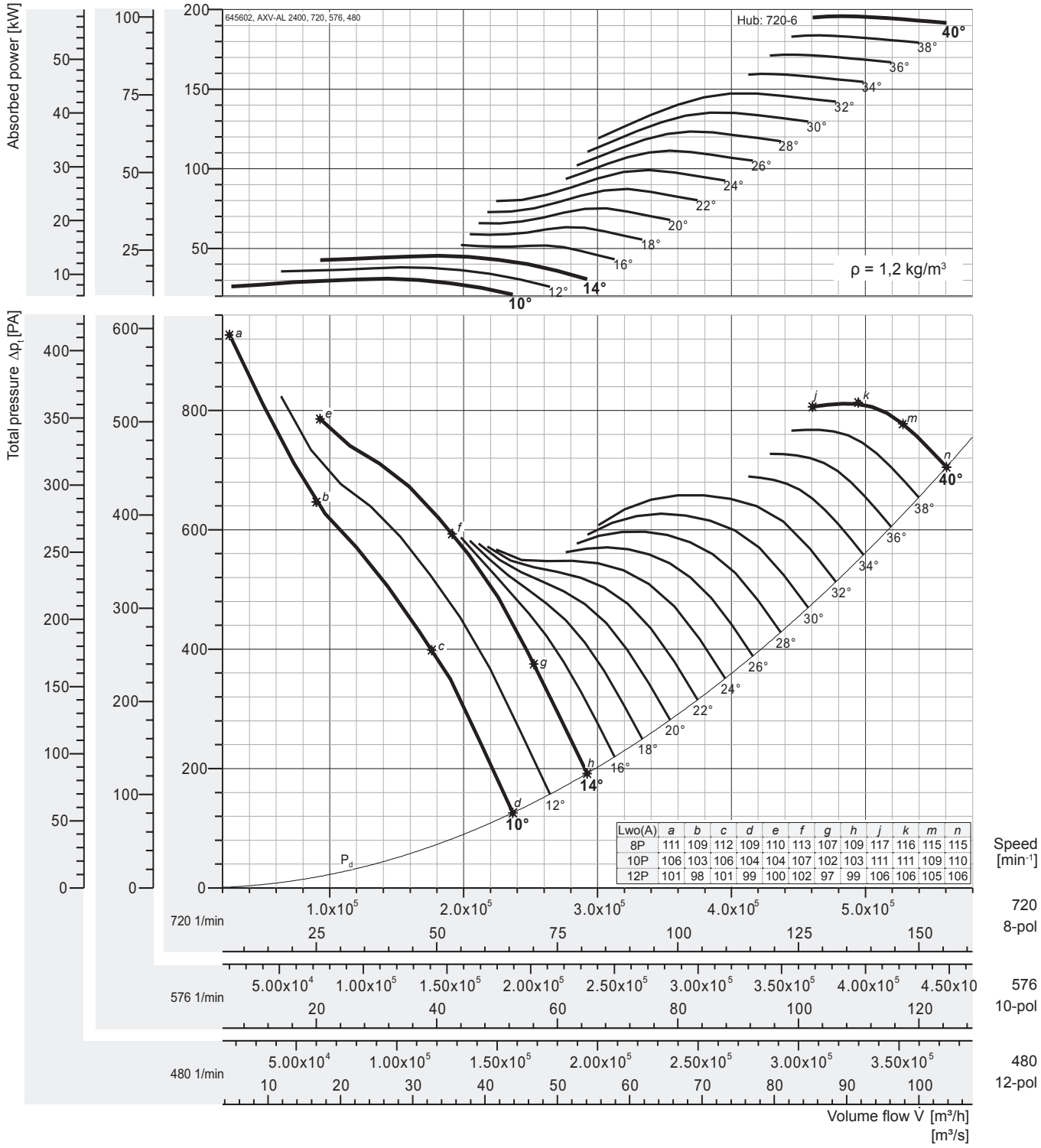


| Lwo(A) | a | b | c | d | e | f | g | h | j | k | m | n |
|---|---|---|---|---|---|---|---|---|---|---|---|---|
| 8P | 111 | 109 | 112 | 109 | 110 | 113 | 107 | 109 | 117 | 116 | 115 | 115 |
| 10P | 106 | 103 | 106 | 104 | 104 | 107 | 102 | 103 | 111 | 111 | 109 | 110 |
| 12P | 101 | 98 | 101 | 99 | 100 | 102 | 97 | 99 | 106 | 106 | 105 | 106 |

### Peak absorbed power [kW]

| n | Pitch angle [°] | | | | | | | | | | | | | | | | |
|---|---|---|---|---|---|---|---|---|---|---|---|---|---|---|---|---|---|
| [min⁻¹] | 8 | 10 | 12 | 14 | 16 | 18 | 20 | 22 | 24 | 26 | 28 | 30 | 32 | 34 | 36 | 38 | 40 |
| 480 | - | 9,14 | 11,3 | 13,4 | 15,4 | 18,7 | 22,2 | 25,8 | 29,4 | 33,0 | 36,5 | 40,1 | 43,6 | 47,3 | 50,9 | 54,4 | 58,0 |
| motor | | 11 | 15 | | 18,5 | 22 | 30 | | | 37 | | 45 | | 55 | | | 75 |
| 576 | - | 15,8 | 19,5 | 23,2 | 26,7 | 32,4 | 38,4 | 44,6 | 50,8 | 57,0 | 63,2 | 69,3 | 75,4 | 81,7 | 87,9 | 94,1 | 100,3 |
| motor | | 18,5 | 22 | 30 | | 37 | 55 | | | 75 | | | 90 | | | 110 | |
| 720 | - | 30,8 | 38,0 | 45,3 | 52,1 | 63,3 | 75,0 | 87,2 | 99,3 | 111,3 | 123,3 | 135,3 | 147,3 | 159,5 | 171,6 | 183,7 | 195,8 |
| motor | | 37 | 45 | 55 | | 75 | | 90 | 110 | 132 | | 160 | | | 200 | | |

*Fan test laboratory AMCA 210/99 Fig.15, Test Chamber. Performance certified is for installation type A - Free inlet, Free outlet. Performance ratings do not include the effects of appurtenances (accessories-belt cover, pulley & belt).*

*The A-weighted sound ratings shown have been calculated per AMCA International Standard 301. Values shown are for outlet LwoA sound power levels for installation Type A: free inlet, free outlet.*

*Sound power frequency spectrum $L_{wrel}$ Page 54-55*

*Dimensions + Accessories Page 49-52*

# Performance Curve

## AXV 2500, 50 Hz

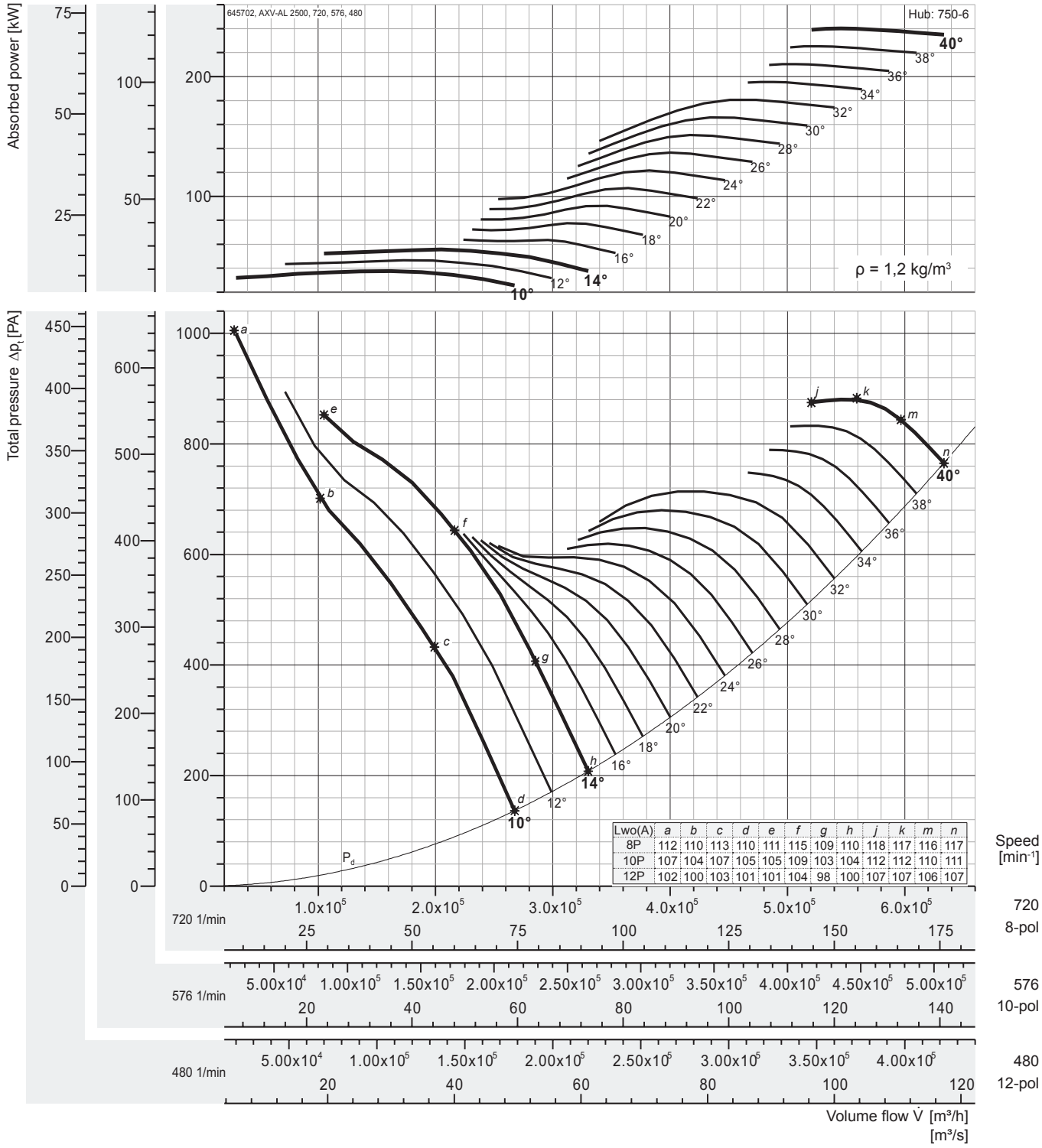


| Lwo(A) | a | b | c | d | e | f | g | h | j | k | m | n |
|---|---|---|---|---|---|---|---|---|---|---|---|---|
| 8P | 112 | 110 | 113 | 110 | 111 | 115 | 109 | 110 | 118 | 117 | 116 | 117 |
| 10P | 107 | 104 | 107 | 105 | 105 | 109 | 103 | 104 | 112 | 112 | 110 | 111 |
| 12P | 102 | 100 | 103 | 101 | 101 | 104 | 98 | 100 | 107 | 107 | 106 | 107 |

### Peak absorbed power [kW]

| n | Pitch angle [°] | | | | | | | | | | | | | | | | |
|---|---|---|---|---|---|---|---|---|---|---|---|---|---|---|---|---|---|
| [min⁻¹] | 8 | 10 | 12 | 14 | 16 | 18 | 20 | 22 | 24 | 26 | 28 | 30 | 32 | 34 | 36 | 38 | 40 |
| 480 | - | 11,2 | 13,8 | 16,5 | 18,9 | 23,0 | 27,3 | 31,7 | 36,1 | 40,4 | 44,8 | 49,2 | 53,5 | 57,9 | 62,4 | 66,8 | 71,2 |
| motor | | 15 | | 18,5 | 22 | 30 | | 37 | | 45 | | 55 | | 75 | | | |
| 576 | - | 19,4 | 23,9 | 28,5 | 32,7 | 39,7 | 47,1 | 54,7 | 62,3 | 69,9 | 77,4 | 84,9 | 92,4 | 100,1 | 107,7 | 115,3 | 122,9 |
| motor | | 22 | 30 | | 37 | 45 | 55 | | 75 | | 90 | | 110 | | | 132 | |
| 720 | - | 37,8 | 46,6 | 55,6 | 63,8 | 77,6 | 92,1 | 106,9 | 121,7 | 136,5 | 151,2 | 165,9 | 180,6 | 195,6 | 210,4 | 225,3 | 240,1 |
| motor | | 45 | 55 | 75 | | 90 | 110 | | 132 | 160 | | 200 | | | 250 | | |

*Fan test laboratory AMCA 210/99 Fig.15, Test Chamber. Performance certified is for installation type A - Free inlet, Free outlet. Performance ratings do not include the effects of appurtenances (accessories-belt cover, pulley & belt).*

*The A-weighted sound ratings shown have been calculated per AMCA International Standard 301. Values shown are for outlet LwoA sound power levels for installation Type A: free inlet, free outlet.*

*Sound power frequency spectrum $L_{wrel}$ Page 54-55*

*Dimensions + Accessories Page 49-52*

# Performance Curve

## AXV 2600, 50 Hz

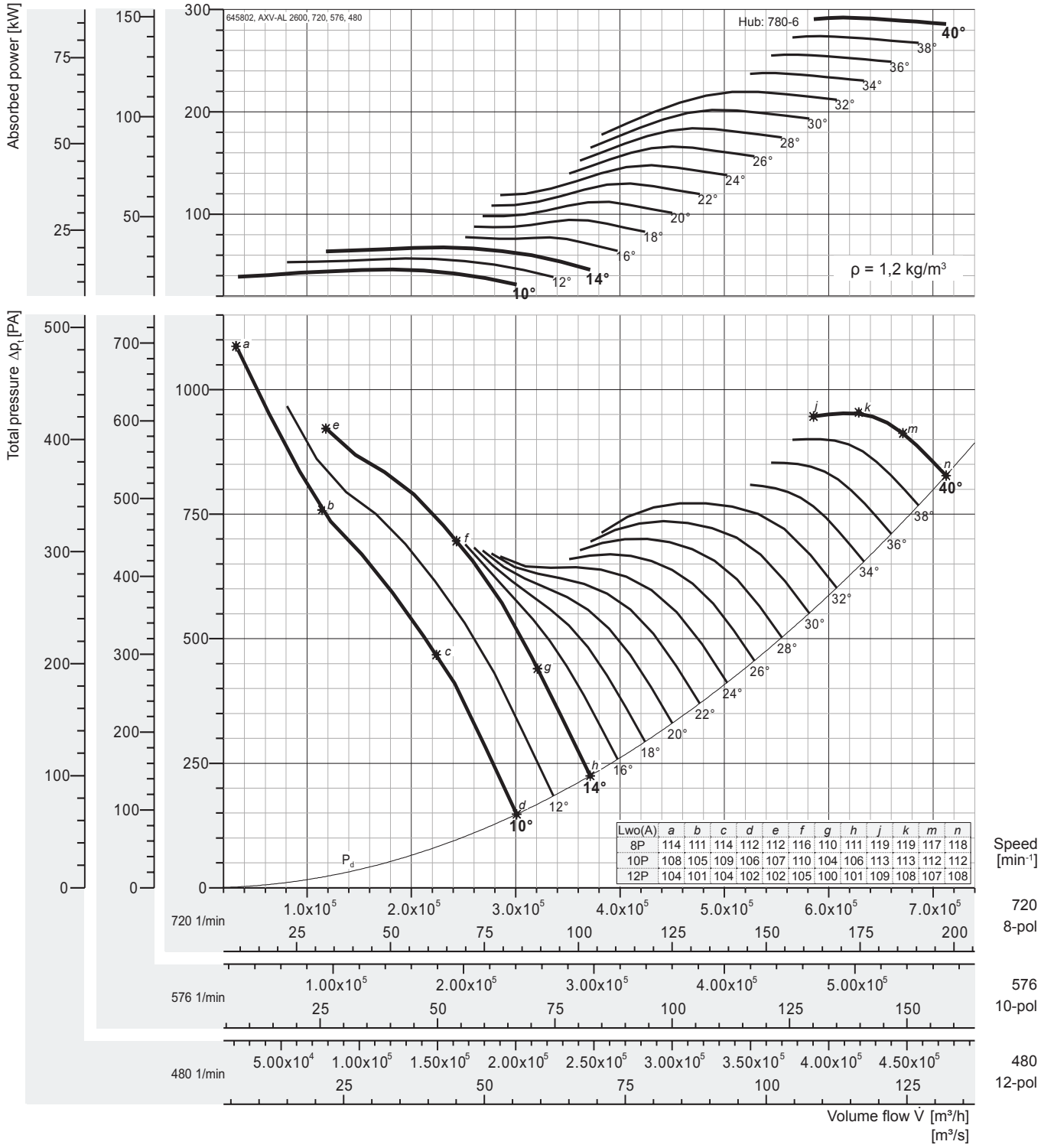


| Lwo(A) | a | b | c | d | e | f | g | h | j | k | m | n |
|---|---|---|---|---|---|---|---|---|---|---|---|---|
| 8P | 114 | 111 | 114 | 112 | 112 | 116 | 110 | 111 | 119 | 119 | 117 | 118 |
| 10P | 108 | 105 | 109 | 106 | 107 | 110 | 104 | 106 | 113 | 113 | 112 | 112 |
| 12P | 104 | 101 | 104 | 102 | 102 | 105 | 100 | 101 | 109 | 108 | 107 | 108 |

### Peak absorbed power [kW]

| n | Pitch angle [°] | | | | | | | | | | | | | | | | |
|---|---|---|---|---|---|---|---|---|---|---|---|---|---|---|---|---|---|
| [min⁻¹] | 8 | 10 | 12 | 14 | 16 | 18 | 20 | 22 | 24 | 26 | 28 | 30 | 32 | 34 | 36 | 38 | 40 |
| 480 | - | 13,6 | 16,8 | 20,0 | 23,0 | 28,0 | 33,2 | 38,5 | 43,9 | 49,2 | 54,5 | 59,8 | 65,1 | 70,5 | 75,8 | 81,2 | 86,5 |
| motor | | 15 | 18,5 | 22 | 30 | | 37 | 45 | | 55 | | 75 | | | 90 | | |
| 576 | - | 23,5 | 29,0 | 34,6 | 39,8 | 48,3 | 57,3 | 66,6 | 75,8 | 85,0 | 94,2 | 103,3 | 112,4 | 121,8 | 131,1 | 140,3 | 149,5 |
| motor | | 30 | | 37 | 45 | 55 | 75 | | 90 | | 110 | | 132 | | | 160 | |
| 720 | - | 46,0 | 56,7 | 67,6 | 77,6 | 94,4 | 112,0 | 130,1 | 148,1 | 166,0 | 184,0 | 201,8 | 219,6 | 237,9 | 255,9 | 274,0 | 292,1 |
| motor | | 55 | 75 | | 90 | 110 | 132 | | 160 | 200 | | 250 | | | 315 | | |

*Fan test laboratory AMCA 210/99 Fig.15, Test Chamber. Performance certified is for installation type A - Free inlet, Free outlet. Performance ratings do not include the effects of appurtenances (accessories-belt cover, pulley & belt).*

*The A-weighted sound ratings shown have been calculated per AMCA International Standard 301. Values shown are for outlet LwoA sound power levels for installation Type A: free inlet, free outlet.*

*Sound power frequency spectrum $L_{wrel}$ Page 54-55*

*Dimensions + Accessories Page 49-52*

# Performance Curve

## AXV 2800, 50 Hz

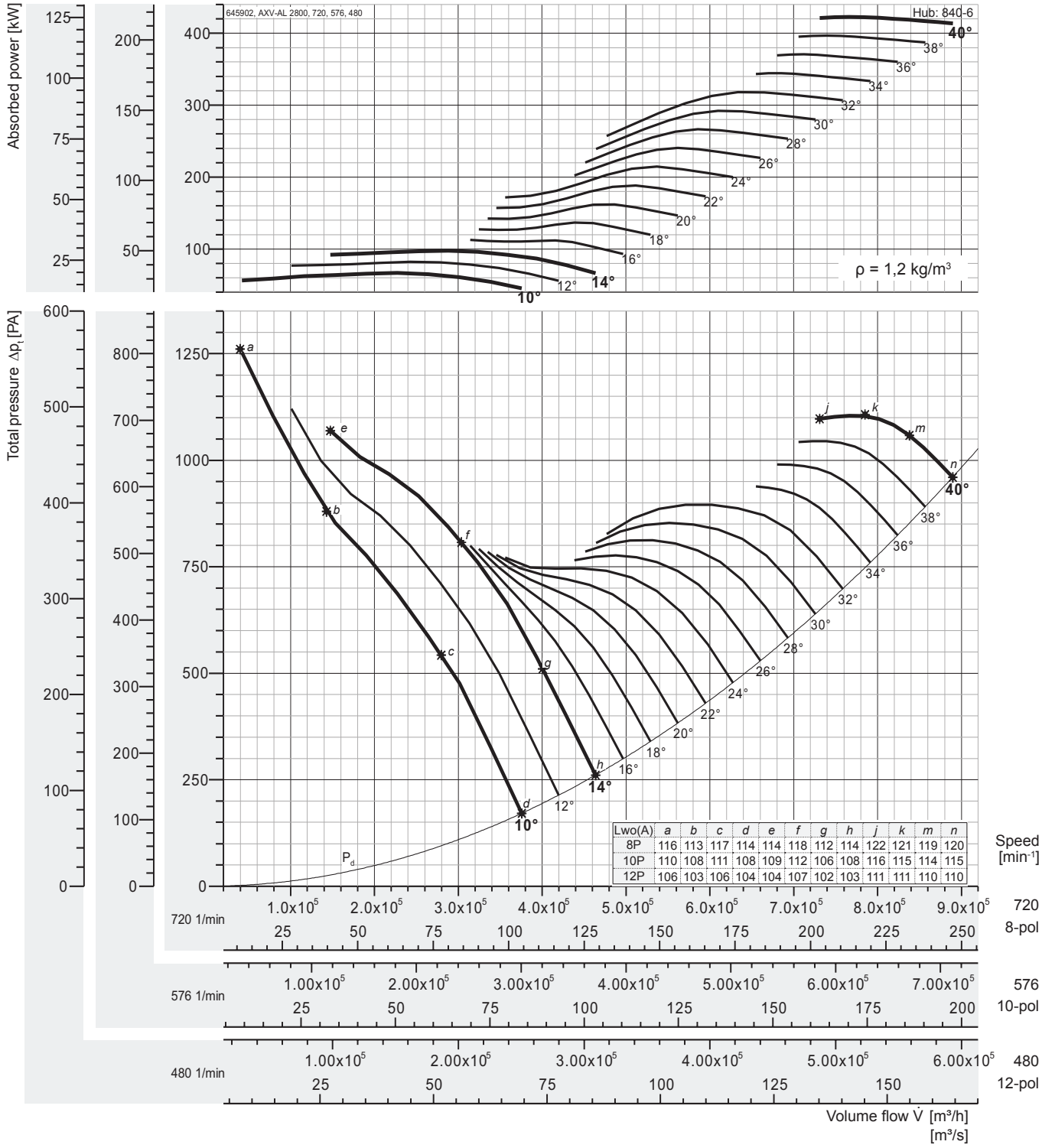


### Peak absorbed power [kW]

| n | Pitch angle [°] | | | | | | | | | | | | | | | | |
|---|---|---|---|---|---|---|---|---|---|---|---|---|---|---|---|---|---|
| [min⁻¹] | 8 | 10 | 12 | 14 | 16 | 18 | 20 | 22 | 24 | 26 | 28 | 30 | 32 | 34 | 36 | 38 | 40 |
| 480 | - | 19,7 | 24,3 | 29,0 | 33,3 | 40,5 | 48,0 | 55,8 | 63,5 | 71,2 | 78,9 | 86,6 | 94,2 | 102,1 | 109,8 | 117,6 | 125,3 |
| motor | | 22 | 30 | | 37 | 45 | 55 | 75 | | | 90 | | 110 | | | 132 | |
| 576 | - | 34,1 | 42,0 | 50,1 | 57,6 | 70,0 | 83,0 | 96,4 | 109,8 | 123,1 | 136,4 | 149,6 | 162,8 | 176,4 | 189,8 | 203,1 | 216,5 |
| motor | | 37 | 45 | 55 | 75 | | 90 | 110 | | 132 | 160 | | 200 | | | 250 | |
| 720 | - | 66,6 | 82,1 | 97,9 | 112,4 | 136,6 | 162,1 | 188,3 | 214,4 | 240,4 | 266,4 | 292,2 | 318,0 | 344,5 | 370,6 | 396,8 | 422,9 |
| motor | | 75 | 90 | 110 | 132 | 160 | 200 | | 250 | | 315 | | 355 | | 450 | | |

*Fan test laboratory AMCA 210/99 Fig.15, Test Chamber. Performance certified is for installation type A - Free inlet, Free outlet. Performance ratings do not include the effects of appurtenances (accessories-belt cover, pulley & belt).*

*The A-weighted sound ratings shown have been calculated per AMCA International Standard 301. Values shown are for outlet LwoA sound power levels for installation Type A: free inlet, free outlet.*

*Sound power frequency spectrum $L_{wrel}$ Page 54-55*

*Dimensions + Accessories Page 49-52*

# AMCA - FEG rating

## *Fan Efficiency Grade - AXV*

Certified FEGs are determined in accordance with AMCA 205-12 Energy Efficiency Classification for fans. In conjunction with AMCA 211-05 (Rev. 6/12) Certified Ratings Program, Product Rating Manual for Fan Air Performance. This classification is based on fan peak (optimum) total efficiency for a given fan speed, fan size and application category. For the purpose of energy classification, the peak efficiency can be determined at a speed not higher than the maximum design speed of the fan.

The AMCA Certified Ratings Seal applies to the Fan Efficiency Grade (FEG) for AXV series Axial Fan model AXV 355 to AXV 2800 as shown in the table below.

| Fan Model No. | Fan Speed (rpm) | Fan Outlet Area (m2) | Fan Efficiency Grades (FEG) | Fan Model No. | Fan Speed (rpm) | Fan Outlet Area (m2) | Fan Efficiency Grade (FEG) |
|---|---|---|---|---|---|---|---|
| AXV 355 | 3456/1728/1152 | 0,1012 | FEG63 | AXV 1250 | 1728/1152/864 | 1,2272 | FEG71 |
| AXV 400 | 3456/1728/1152 | 0,1269 | FEG67 | AXV 1400 | 1152/864/691 | 1,5504 | FEG75 |
| AXV 450 | 3456/1728/1152 | 0,1590 | FEG63 | AXV 1600 | 1152/864/691 | 1,9981 | FEG67 |
| AXV 500 | 3456/1728/1152 | 0,2003 | FEG71 | AXV 1800 | 1152/864/691 | 2,5588 | FEG75 |
| AXV 560 | 3456/1728/1152 | 0,2516 | FEG67 | AXV 2000 | 1152/864/691 | 3,1573 | FEG75 |
| AXV 630 | 3456/1728/1152 | 0,3167 | FEG63 | AXV 2200 | 864/691/576 | 3,8186 | FEG75 |
| AXV 710 | 1728/1152/864 | 0,3982 | FEG67 | AXV 2400 | 864/691/576 | 4,5428 | FEG75 |
| AXV 800 | 1728/1152/864 | 0,5001 | FEG67 | AXV 2500 | 864/691/576 | 4,9284 | FEG75 |
| AXV 900 | 1728/1152/864 | 0,6333 | FEG63 | AXV 2600 | 864/691/576 | 5,3297 | FEG75 |
| AXV 1000 | 1728/1152/864 | 0,7980 | FEG71 | AXV 2800 | 864/691/576 | 6,1795 | FEG75 |
| AXV 1120 | 1728/1152/864 | 0,9978 | FEG71 | | | | |

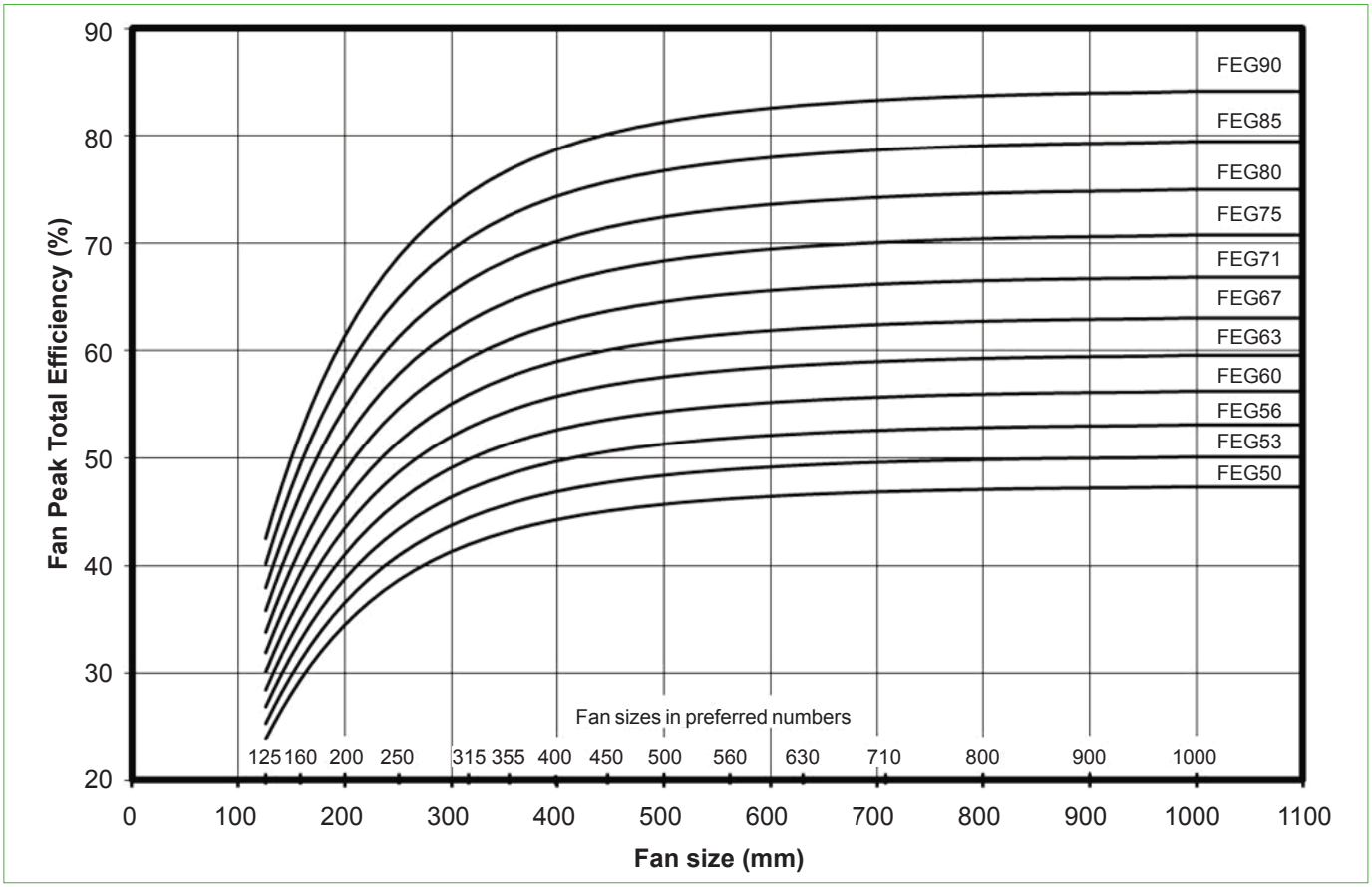

# Performance Curve

## AXV 355, 60 Hz

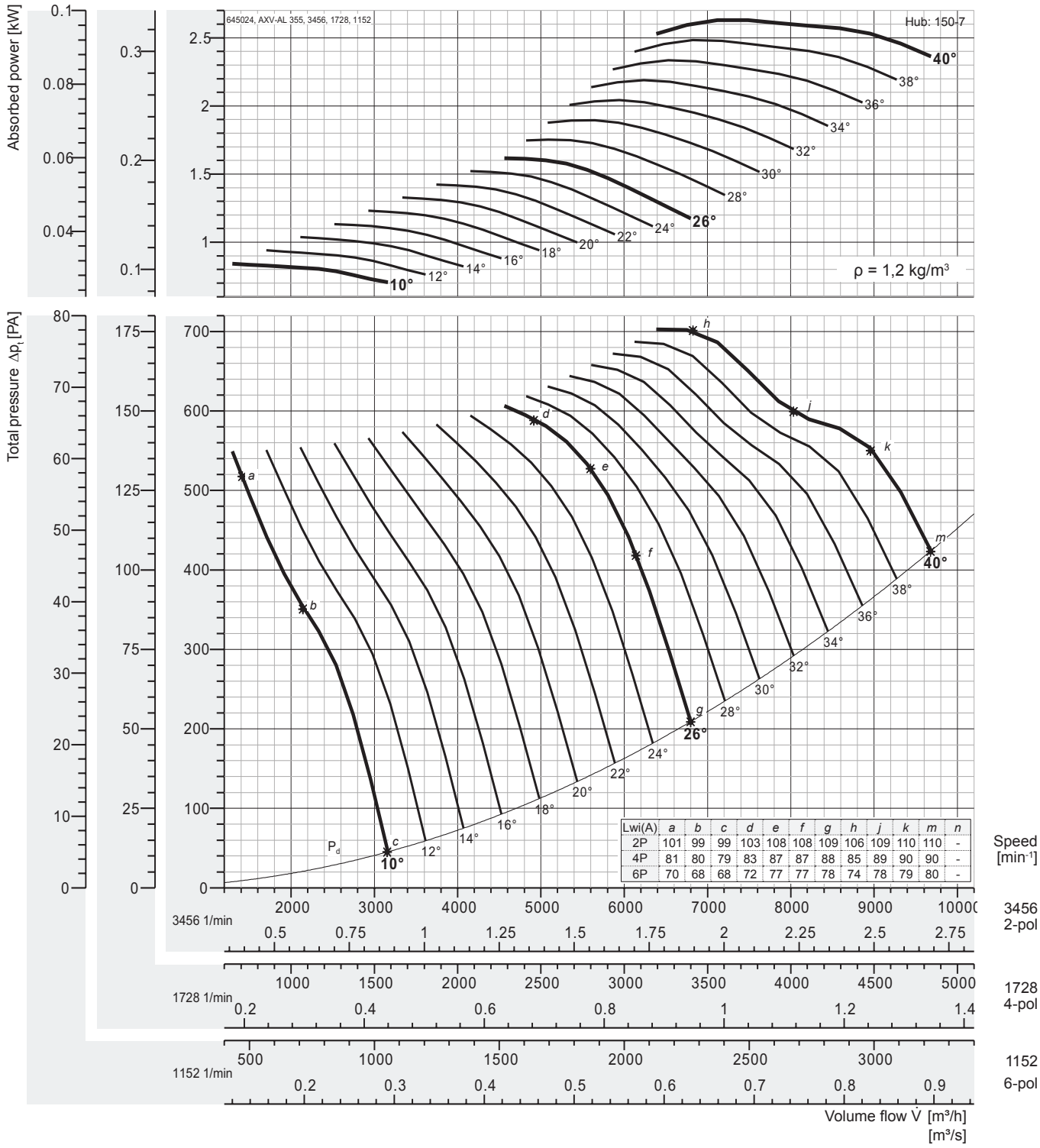


| Lwi(A) | a | b | c | d | e | f | g | h | j | k | m | n |
|---|---|---|---|---|---|---|---|---|---|---|---|---|
| 2P | 101 | 99 | 99 | 103 | 108 | 108 | 109 | 106 | 109 | 110 | 110 | - |
| 4P | 81 | 80 | 79 | 83 | 87 | 87 | 88 | 85 | 89 | 90 | 90 | - |
| 6P | 70 | 68 | 68 | 72 | 77 | 77 | 78 | 74 | 78 | 79 | 80 | - |

### Peak absorbed power [kW]

** Out of Range*

| n | Pitch angle [°] | | | | | | | | | | | | | | | | |
|---|---|---|---|---|---|---|---|---|---|---|---|---|---|---|---|---|---|
| [min⁻¹] | 8 | 10 | 12 | 14 | 16 | 18 | 20 | 22 | 24 | 26 | 28 | 30 | 32 | 34 | 36 | 38 | 40 |
| 1152 | - | 0,031 | 0,035 | 0,038 | 0,042 | 0,046 | 0,049 | 0,053 | 0,056 | 0,060 | 0,065 | 0,070 | 0,076 | 0,081 | 0,087 | 0,092 | 0,097 |
| motor | | 0,37 | | | | | | | | | | | | | | | |
| 1728 | - | 0,105 | 0,118 | 0,130 | 0,142 | 0,154 | 0,166 | 0,178 | 0,190 | 0,202 | 0,219 | 0,237 | 0,255 | 0,274 | 0,292 | 0,310 | 0,329 |
| motor | | 0,37 | | | | | | | | | | | | | | | |
| 3456 | - | 0,843 | 0,940 | 1,04 | 1,13 | 1,23 | 1,33 | 1,42 | 1,52 | 1,62 | 1,75 | 1,90 | 2,04 | 2,19 | 2,34 | 2,48 | 2,63 |
| motor | | 1,1 | | | 1,5 | | | | 2,2 | | | | | | -* | | |

*Fan test laboratory AMCA 210/99 Fig.12, Test Chamber. Performance certified is for installation type D - Ducted inlet, Ducted outlet. Performance ratings do not include the effects of appurtenances (accessories-belt cover, pulley & belt).*

*The A-weighted sound ratings shown have been calculated per AMCA International Standard 301. Values shown are for inlet LwiA sound power levels for installation Type D: ducted inlet, ducted outlet. Ratings include the effects of duct end correction.*

*Sound power frequency spectrum $L_{wrel}$ Page 54-55*

*Dimensions + Accessories Page 49-52*

# Performance Curve

## AXV 400, 60 Hz

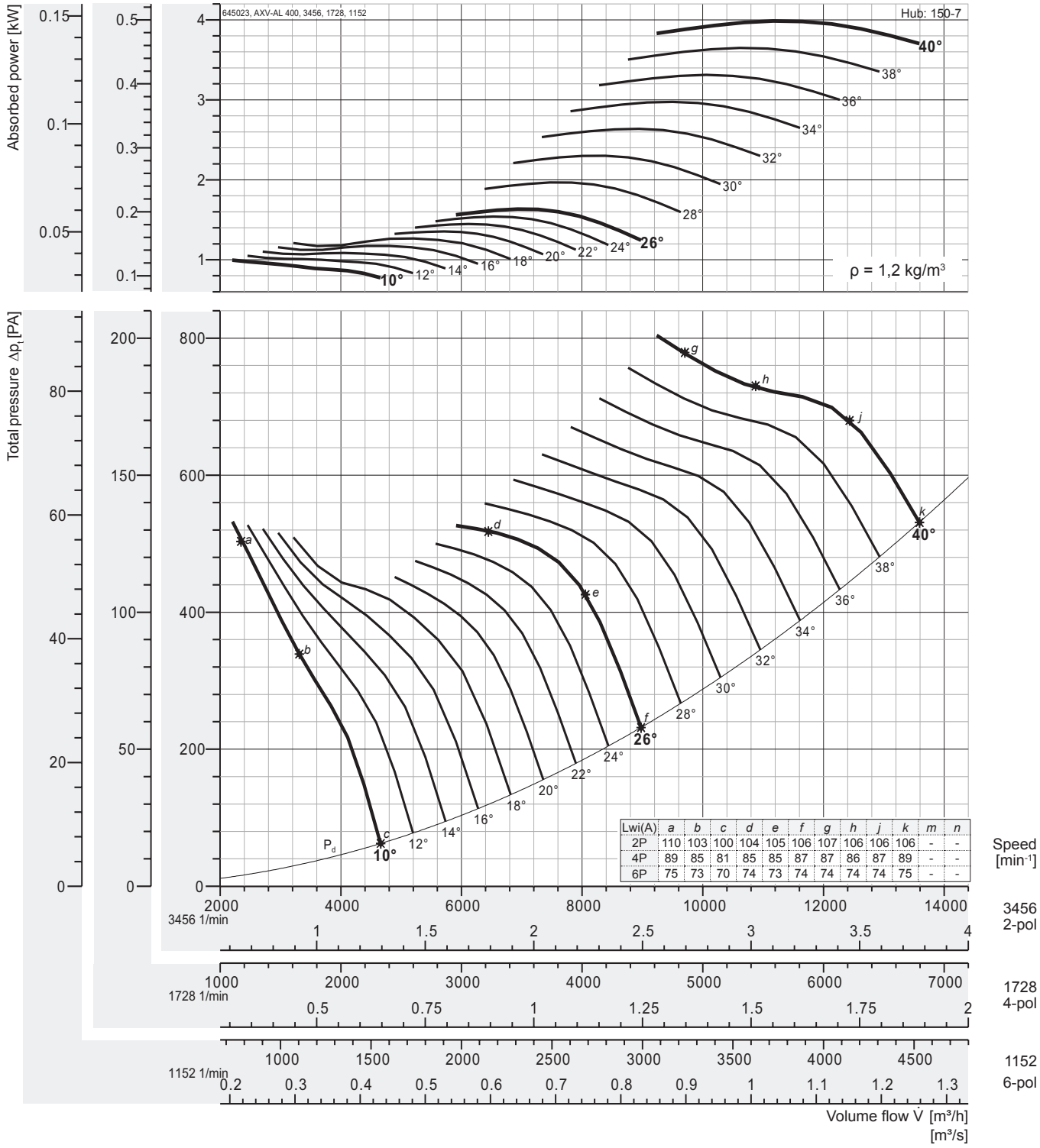


### Peak absorbed power [kW]

** Out of Range*

| n | Pitch angle [°] | | | | | | | | | | | | | | | | |
|---|---|---|---|---|---|---|---|---|---|---|---|---|---|---|---|---|---|
| [min⁻¹] | 8 | 10 | 12 | 14 | 16 | 18 | 20 | 22 | 24 | 26 | 28 | 30 | 32 | 34 | 36 | 38 | 40 |
| 1152 | - | 0,037 | 0,039 | 0,041 | 0,043 | 0,047 | 0,050 | 0,054 | 0,057 | 0,061 | 0,073 | 0,085 | 0,098 | 0,110 | 0,123 | 0,135 | 0,148 |
| motor | | 0,37 | | | | | | | | | | | | | | | |
| 1728 | - | 0,124 | 0,131 | 0,138 | 0,147 | 0,158 | 0,169 | 0,181 | 0,193 | 0,204 | 0,246 | 0,288 | 0,330 | 0,372 | 0,414 | 0,456 | 0,498 |
| motor | | 0,37 | | | | | | | | | | | | 0,55 | | | |
| 3456 | - | 0,995 | 1,05 | 1,10 | 1,17 | 1,27 | 1,35 | 1,45 | 1,54 | 1,63 | 1,97 | 2,30 | 2,64 | 2,98 | 3,31 | 3,65 | 3,99 |
| motor | | 1,1 | | | 1,5 | | | | 2,2 | | | 3 | | | -* | | |

*Fan test laboratory AMCA 210/99 Fig.12, Test Chamber. Performance certified is for installation type D - Ducted inlet, Ducted outlet. Performance ratings do not include the effects of appurtenances (accessories-belt cover, pulley & belt).*

*The A-weighted sound ratings shown have been calculated per AMCA International Standard 301. Values shown are for inlet LwiA sound power levels for installation Type D: ducted inlet, ducted outlet. Ratings include the effects of duct end correction.*

*Sound power frequency spectrum $L_{wrel}$ Page 54-55*

*Dimensions + Accessories Page 49-52*

# Performance Curve

## AXV 450, 60 Hz

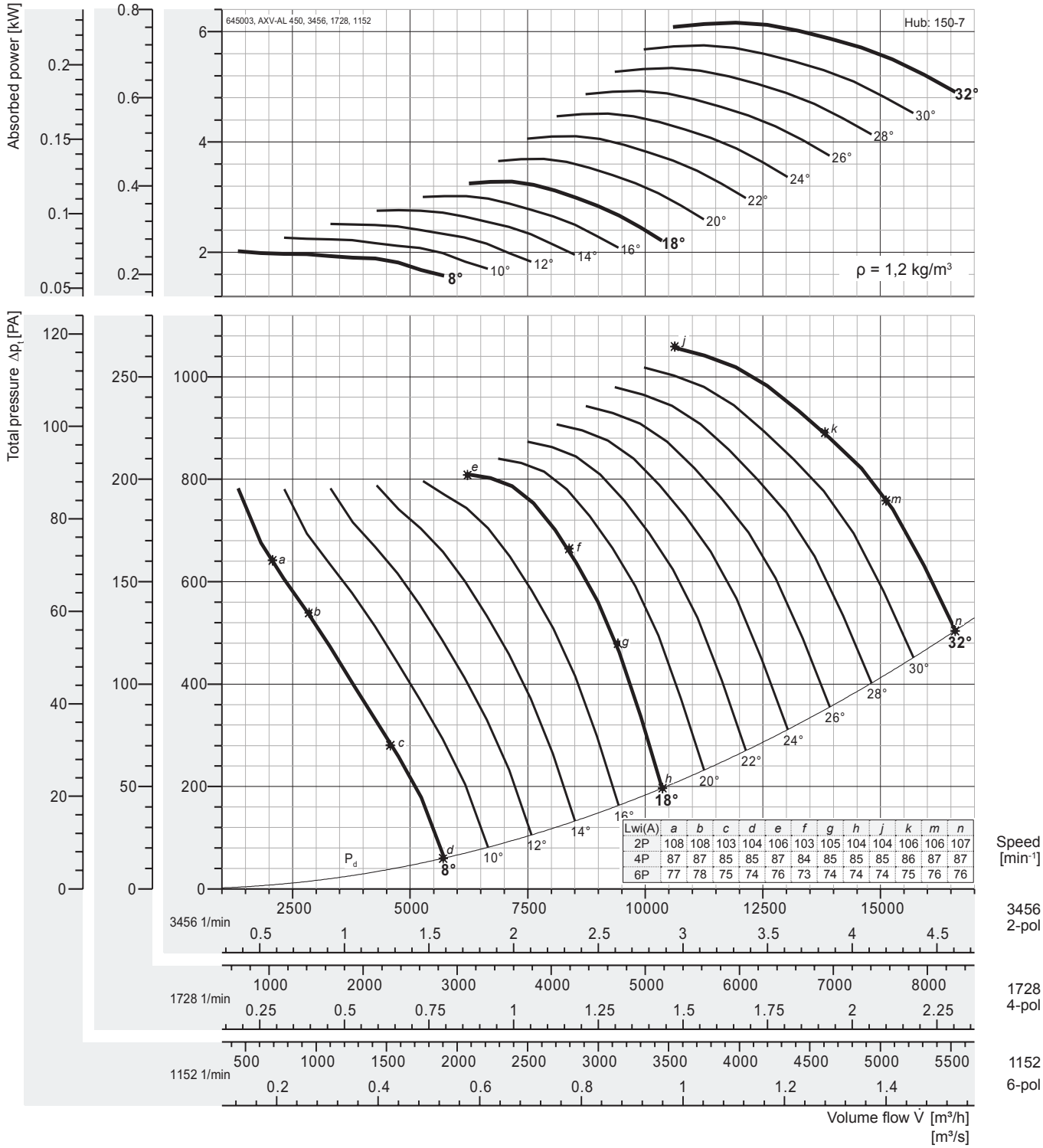


| Lwi(A) | a | b | c | d | e | f | g | h | j | k | m | n |
|---|---|---|---|---|---|---|---|---|---|---|---|---|
| 2P | 108 | 108 | 103 | 104 | 106 | 103 | 105 | 104 | 104 | 106 | 106 | 107 |
| 4P | 87 | 87 | 85 | 85 | 87 | 84 | 85 | 85 | 85 | 86 | 87 | 87 |
| 6P | 77 | 78 | 75 | 74 | 76 | 73 | 74 | 74 | 74 | 75 | 76 | 76 |

### Peak absorbed power [kW]

** Out of Range*

| n | Pitch angle [°] | | | | | | | | | | | | | | | | |
|---|---|---|---|---|---|---|---|---|---|---|---|---|---|---|---|---|---|
| [min⁻¹] | 8 | 10 | 12 | 14 | 16 | 18 | 20 | 22 | 24 | 26 | 28 | 30 | 32 | 34 | 36 | 38 | 40 |
| 1152 | 0,075 | 0,084 | 0,093 | 0,102 | 0,112 | 0,121 | 0,137 | 0,152 | 0,167 | 0,182 | 0,198 | 0,213 | 0,228 | - | - | - | - |
| motor | 0,37 | | | | | | | | | | | | | | | | |
| 1728 | 0,252 | 0,283 | 0,314 | 0,345 | 0,377 | 0,410 | 0,461 | 0,513 | 0,564 | 0,616 | 0,667 | 0,719 | 0,770 | - | - | - | - |
| motor | 0,37 | | | | 0,55 | | | | 0,75 | | | | 1,1 | | | | |
| 3456 | 2,02 | 2,26 | 2,51 | 2,76 | 3,02 | 3,28 | 3,69 | 4,10 | 4,52 | 4,93 | 5,34 | 5,75 | 6,16 | - | - | - | - |
| motor | 2,2 | 3 | | | 4 | | | -* | | | | | | | | | |

*Fan test laboratory AMCA 210/99 Fig.12, Test Chamber. Performance certified is for installation type D - Ducted inlet, Ducted outlet. Performance ratings do not include the effects of appurtenances (accessories-belt cover, pulley & belt).*

*The A-weighted sound ratings shown have been calculated per AMCA International Standard 301. Values shown are for inlet LwiA sound power levels for installation Type D: ducted inlet, ducted outlet. Ratings include the effects of duct end correction.*

*Sound power frequency spectrum $L_{wrel}$ Page 54-55*

*Dimensions + Accessories Page 49-52*

# Performance Curve

## AXV 500, 60 Hz

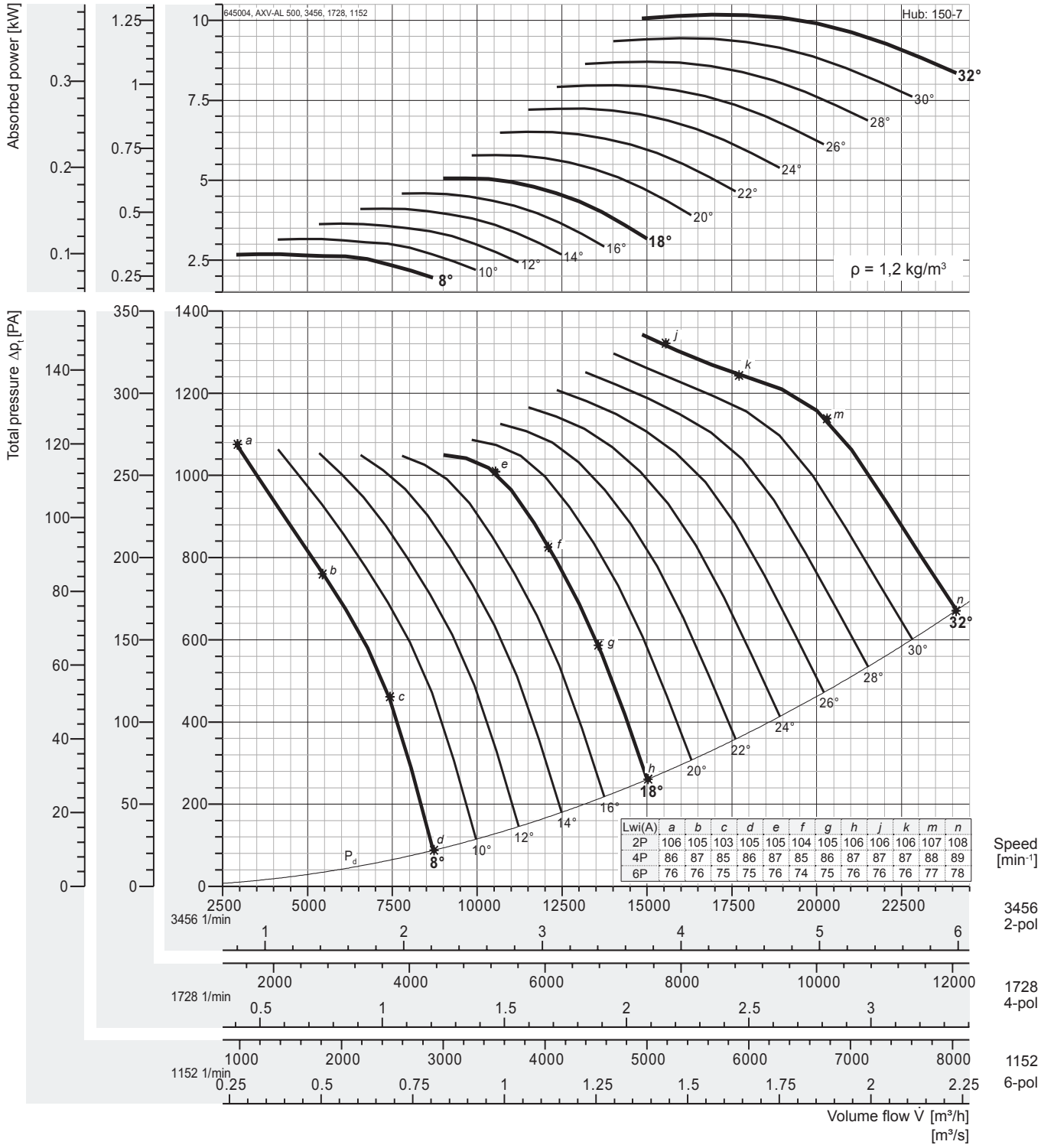


### Peak absorbed power [kW]

** Out of Range*

| n | Pitch angle [°] | | | | | | | | | | | | | | | | |
|---|---|---|---|---|---|---|---|---|---|---|---|---|---|---|---|---|---|
| [min⁻¹] | 8 | 10 | 12 | 14 | 16 | 18 | 20 | 22 | 24 | 26 | 28 | 30 | 32 | 34 | 36 | 38 | 40 |
| 1152 | 0,099 | 0,117 | 0,135 | 0,152 | 0,170 | 0,187 | 0,214 | 0,241 | 0,268 | 0,295 | 0,322 | 0,350 | 0,377 | - | - | - | - |
| motor | 0,37 | | | | | | | | | | | | 0,55 | | | | |
| 1728 | 0,336 | 0,395 | 0,454 | 0,514 | 0,573 | 0,633 | 0,723 | 0,814 | 0,905 | 0,997 | 1,09 | 1,18 | 1,27 | - | - | - | - |
| motor | 0,37 | 0,55 | | | 0,75 | | | 1,1 | | | | 1,5 | | | | | |
| 3456 | 2,69 | 3,16 | 3,64 | 4,11 | 4,59 | 5,06 | 5,79 | 6,51 | 7,24 | 7,97 | 8,71 | 9,44 | 10,2 | - | - | - | - |
| motor | 3 | 4 | | -* | | | | | | | | | | | | | |

*Fan test laboratory AMCA 210/99 Fig.12, Test Chamber. Performance certified is for installation type D - Ducted inlet, Ducted outlet. Performance ratings do not include the effects of appurtenances (accessories-belt cover, pulley & belt).*

*The A-weighted sound ratings shown have been calculated per AMCA International Standard 301. Values shown are for inlet LwiA sound power levels for installation Type D: ducted inlet, ducted outlet. Ratings include the effects of duct end correction.*

*Sound power frequency spectrum $L_{wrel}$ Page 54-55*

*Dimensions + Accessories Page 49-52*

# Performance Curve

## AXV 560, 60 Hz

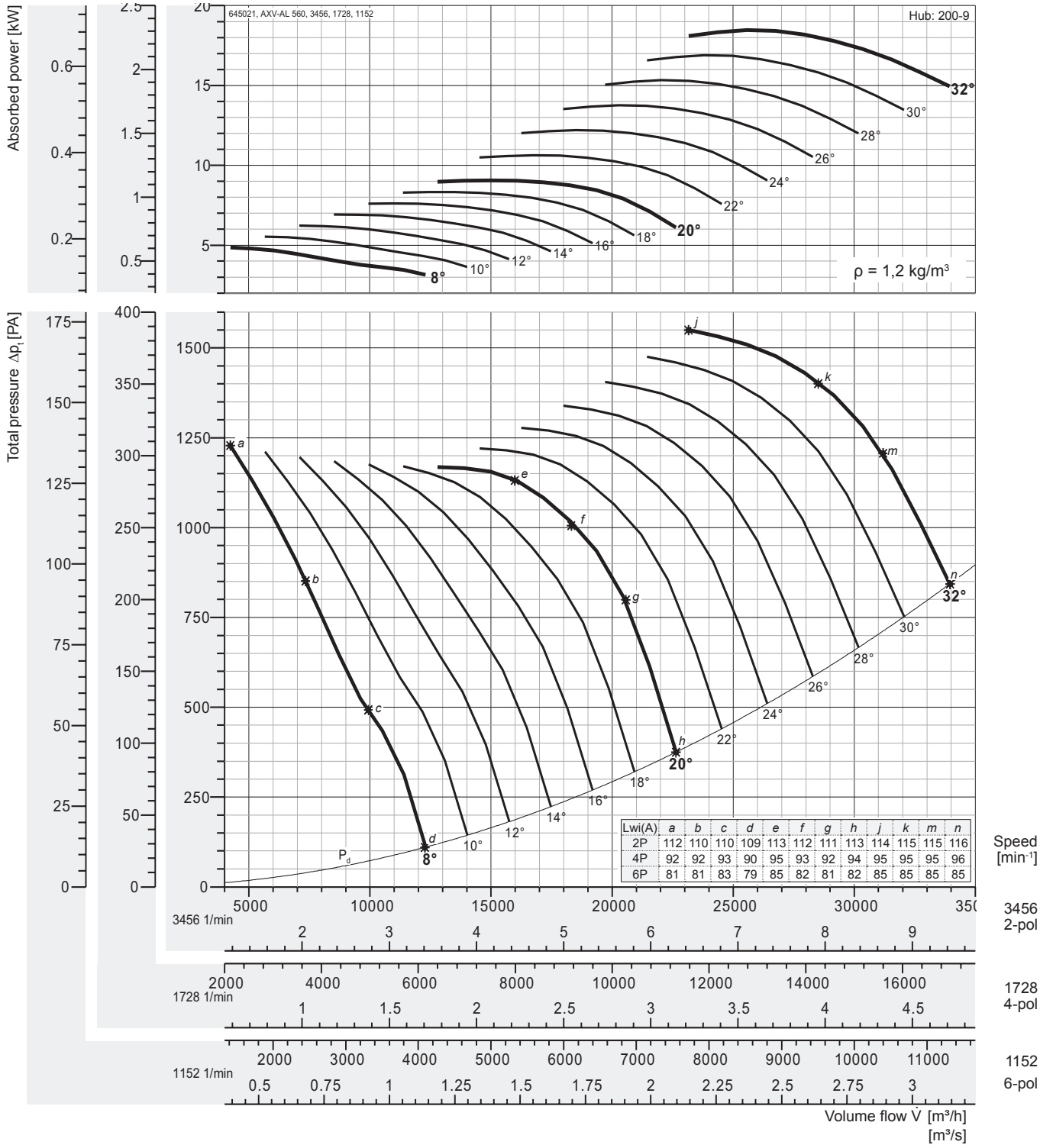


| Lwi(A) | a | b | c | d | e | f | g | h | j | k | m | n |
|---|---|---|---|---|---|---|---|---|---|---|---|---|
| 2P | 112 | 110 | 110 | 109 | 113 | 112 | 111 | 113 | 114 | 115 | 115 | 116 |
| 4P | 92 | 92 | 93 | 90 | 95 | 93 | 92 | 94 | 95 | 95 | 95 | 96 |
| 6P | 81 | 81 | 83 | 79 | 85 | 82 | 81 | 82 | 85 | 85 | 85 | 85 |

### Peak absorbed power [kW]

| n | Pitch angle [°] | | | | | | | | | | | | | | | | |
|---|---|---|---|---|---|---|---|---|---|---|---|---|---|---|---|---|---|
| [min⁻¹] | 8 | 10 | 12 | 14 | 16 | 18 | 20 | 22 | 24 | 26 | 28 | 30 | 32 | 34 | 36 | 38 | 40 |
| 1152 | 0,180 | 0,205 | 0,231 | 0,256 | 0,282 | 0,308 | 0,336 | 0,394 | 0,452 | 0,510 | 0,568 | 0,626 | 0,684 | - | - | - | - |
| motor | 0,37 | | | | | | | 0,55 | | | 0,75 | | | | | | |
| 1728 | 0,607 | 0,692 | 0,778 | 0,864 | 0,952 | 1,04 | 1,13 | 1,33 | 1,52 | 1,72 | 1,92 | 2,11 | 2,31 | - | - | - | - |
| motor | 0,75 | | 1,1 | | | | 1,5 | | 2,2 | | | | 3 | | | | |
| 3456 | 4,85 | 5,54 | 6,23 | 6,91 | 7,61 | 8,33 | 9,06 | 10,6 | 12,2 | 13,8 | 15,3 | 16,9 | 18,4 | - | - | - | - |
| motor | 5,5 | 7,5 | | | 11 | | | | 15 | | 18,5 | | | | | | |

*Fan test laboratory AMCA 210/99 Fig.12, Test Chamber. Performance certified is for installation type D - Ducted inlet, Ducted outlet. Performance ratings do not include the effects of appurtenances (accessories-belt cover, pulley & belt).*

*The A-weighted sound ratings shown have been calculated per AMCA International Standard 301. Values shown are for inlet LwiA sound power levels for installation Type D: ducted inlet, ducted outlet. Ratings include the effects of duct end correction.*

*Sound power frequency spectrum $L_{wrel}$ Page 54-55*

*Dimensions + Accessories Page 49-52*

# Performance Curve

## AXV 630, 60 Hz

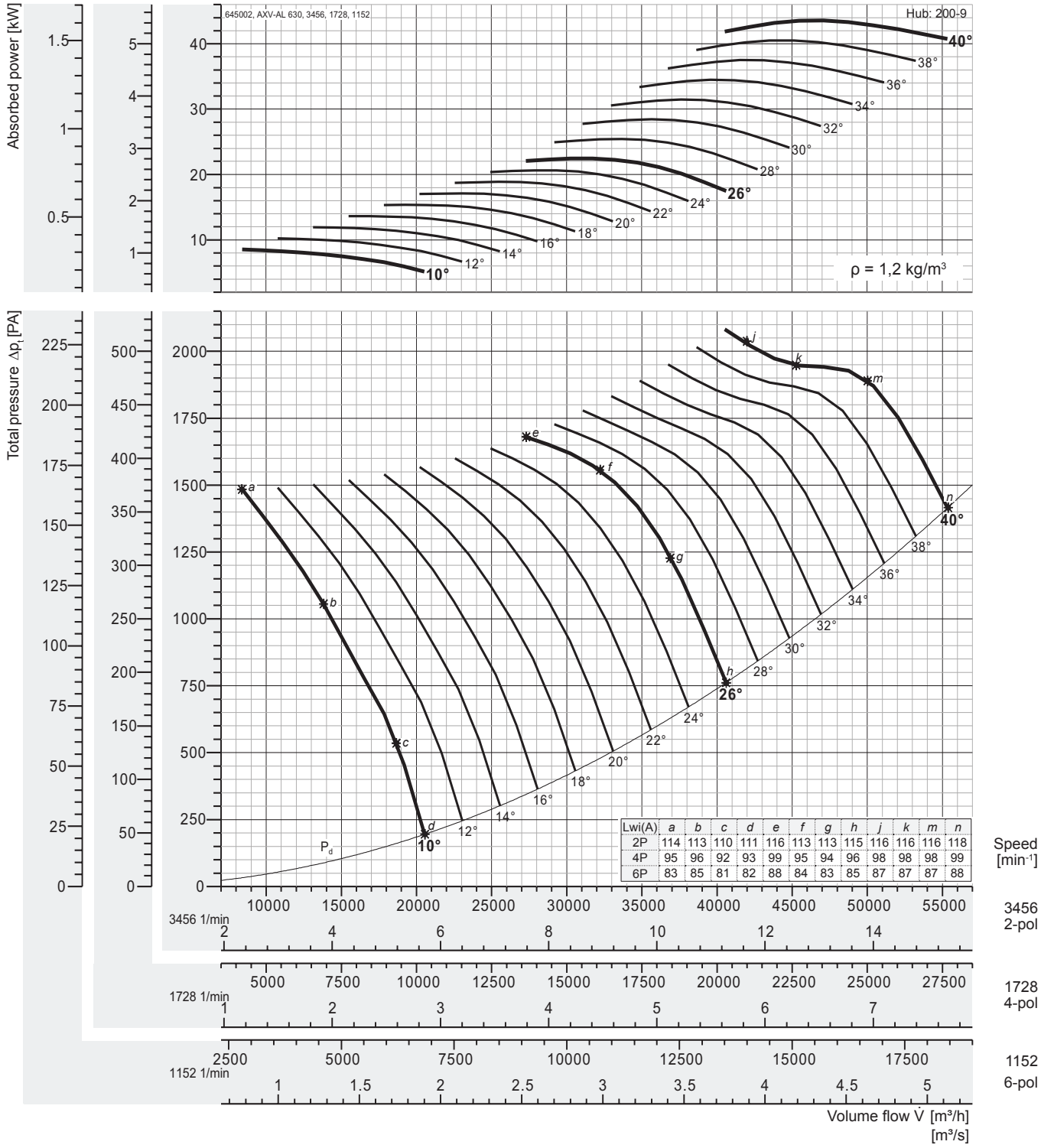


| Lwi(A) | a | b | c | d | e | f | g | h | j | k | m | n |
|---|---|---|---|---|---|---|---|---|---|---|---|---|
| 2P | 114 | 113 | 110 | 111 | 116 | 113 | 113 | 115 | 116 | 116 | 116 | 118 |
| 4P | 95 | 96 | 92 | 93 | 99 | 95 | 94 | 96 | 98 | 98 | 98 | 99 |
| 6P | 83 | 85 | 81 | 82 | 88 | 84 | 83 | 85 | 87 | 87 | 87 | 88 |

### Peak absorbed power [kW]

** Out of Range*

| n | Pitch angle [°] | | | | | | | | | | | | | | | | |
|---|---|---|---|---|---|---|---|---|---|---|---|---|---|---|---|---|---|
| [min⁻¹] | 8 | 10 | 12 | 14 | 16 | 18 | 20 | 22 | 24 | 26 | 28 | 30 | 32 | 34 | 36 | 38 | 40 |
| 1152 | - | 0,316 | 0,379 | 0,442 | 0,505 | 0,568 | 0,624 | 0,699 | 0,765 | 0,831 | 0,942 | 1,05 | 1,17 | 1,28 | 1,39 | 1,50 | 1,63 |
| motor | | 0,37 | 0,55 | | | 0,75 | | | 1,1 | | | | 1,5 | | | | 2,2 |
| 1728 | - | 1,07 | 1,28 | 1,49 | 1,70 | 1,92 | 2,14 | 2,36 | 2,58 | 2,80 | 3,18 | 3,56 | 3,93 | 4,31 | 4,69 | 5,06 | 5,44 |
| motor | | 1,1 | 1,5 | | 2,2 | | | 3 | | | 4 | | | 5,5 | | | |
| 3456 | - | 8,54 | 10,2 | 11,9 | 13,6 | 15,3 | 17,1 | 18,9 | 20,7 | 22,4 | 25,4 | 28,5 | 31,5 | 34,5 | 37,5 | 40,5 | 43,6 |
| motor | | 11 | | 15 | | 18,5 | | -* | | | | | | | | | |

*Fan test laboratory AMCA 210/99 Fig.12, Test Chamber. Performance certified is for installation type D - Ducted inlet, Ducted outlet. Performance ratings do not include the effects of appurtenances (accessories-belt cover, pulley & belt).*

*The A-weighted sound ratings shown have been calculated per AMCA International Standard 301. Values shown are for inlet LwiA sound power levels for installation Type D: ducted inlet, ducted outlet. Ratings include the effects of duct end correction.*

*Sound power frequency spectrum $L_{wrel}$ Page 54-55*

*Dimensions + Accessories Page 49-52*

# Performance Curve

## AXV 710, 60 Hz

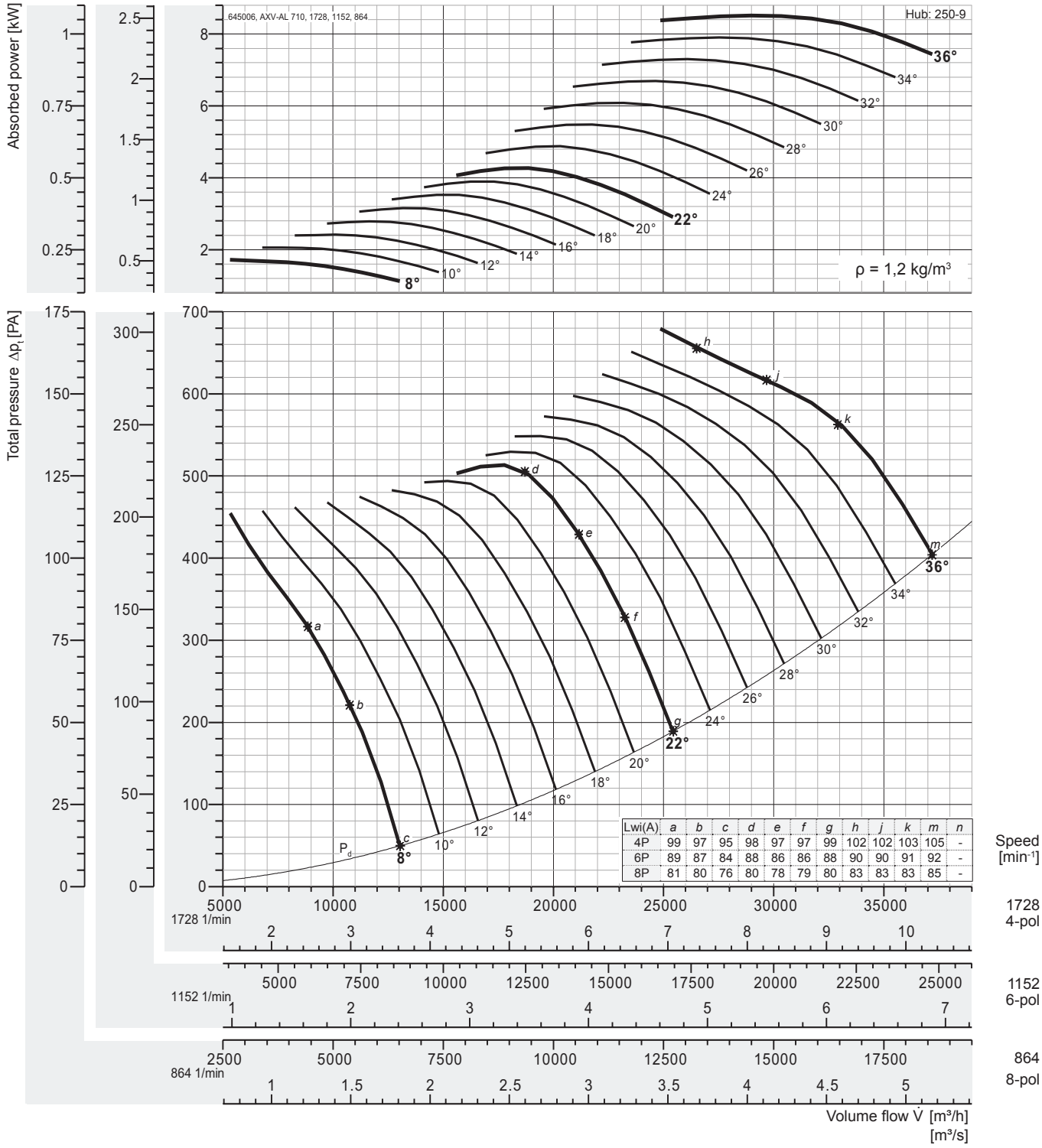


| Lwi(A) | a | b | c | d | e | f | g | h | j | k | m | n |
|---|---|---|---|---|---|---|---|---|---|---|---|---|
| 4P | 99 | 97 | 95 | 98 | 97 | 97 | 99 | 102 | 102 | 103 | 105 | - |
| 6P | 89 | 87 | 84 | 88 | 86 | 86 | 88 | 90 | 90 | 91 | 92 | - |
| 8P | 81 | 80 | 76 | 80 | 78 | 79 | 80 | 83 | 83 | 83 | 85 | - |

### Peak absorbed power [kW]

| n | Pitch angle [°] | | | | | | | | | | | | | | | | |
|---|---|---|---|---|---|---|---|---|---|---|---|---|---|---|---|---|---|
| [min⁻¹] | 8 | 10 | 12 | 14 | 16 | 18 | 20 | 22 | 24 | 26 | 28 | 30 | 32 | 34 | 36 | 38 | 40 |
| 864 | 0,215 | 0,257 | 0,302 | 0,348 | 0,394 | 0,441 | 0,487 | 0,534 | 0,610 | 0,685 | 0,761 | 0,837 | 0,912 | 0,988 | 1,06 | - | - |
| motor | 0,37 | | | | 0,55 | | | | 0,75 | | 1,1 | | | | | | |
| 1152 | 0,510 | 0,609 | 0,715 | 0,825 | 0,935 | 1,04 | 1,15 | 1,27 | 1,45 | 1,62 | 1,80 | 1,98 | 2,16 | 2,34 | 2,52 | - | - |
| motor | 0,55 | 0,75 | | 1,1 | | | 1,5 | | | 2,2 | | | | 3 | | | |
| 1728 | 1,72 | 2,06 | 2,41 | 2,78 | 3,15 | 3,52 | 3,90 | 4,27 | 4,88 | 5,48 | 6,09 | 6,69 | 7,30 | 7,91 | 8,51 | - | - |
| motor | 2,2 | | 3 | | 4 | | | 5,5 | | | 7,5 | | | 11 | | | |

*Fan test laboratory AMCA 210/99 Fig.12, Test Chamber. Performance certified is for installation type D - Ducted inlet, Ducted outlet. Performance ratings do not include the effects of appurtenances (accessories-belt cover, pulley & belt).*

*The A-weighted sound ratings shown have been calculated per AMCA International Standard 301. Values shown are for inlet LwiA sound power levels for installation Type D: ducted inlet, ducted outlet. Ratings include the effects of duct end correction.*

*Sound power frequency spectrum $L_{wrel}$ Page 54-55*

*Dimensions + Accessories Page 49-52*

# Performance Curve

## AXV 800, 60 Hz

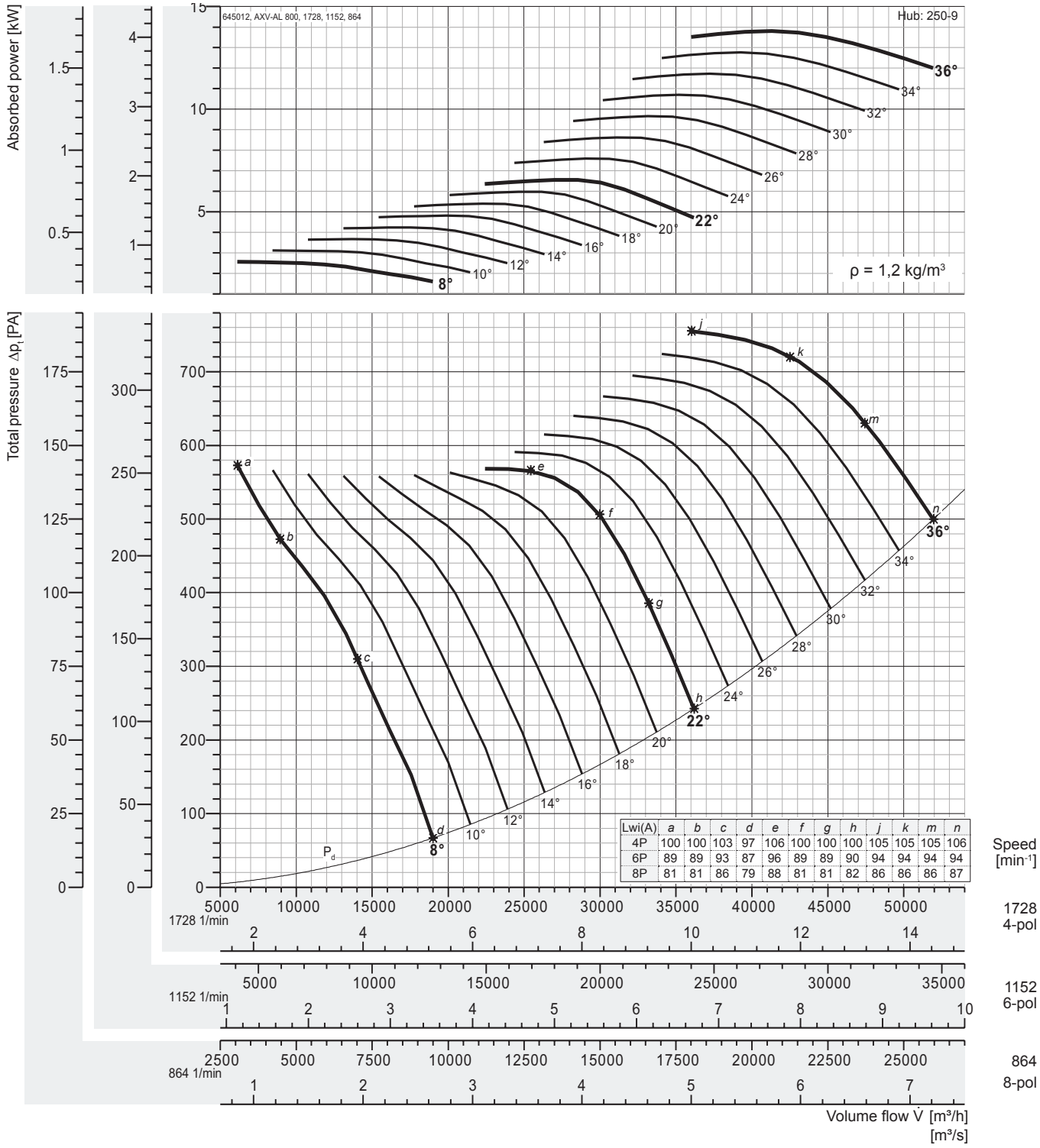


| Lwi(A) | a | b | c | d | e | f | g | h | j | k | m | n |
|---|---|---|---|---|---|---|---|---|---|---|---|---|
| 4P | 100 | 100 | 103 | 97 | 106 | 100 | 100 | 100 | 105 | 105 | 105 | 106 |
| 6P | 89 | 89 | 93 | 87 | 96 | 89 | 89 | 90 | 94 | 94 | 94 | 94 |
| 8P | 81 | 81 | 86 | 79 | 88 | 81 | 81 | 82 | 86 | 86 | 86 | 87 |

### Peak absorbed power [kW]

| n | Pitch angle [°] | | | | | | | | | | | | | | | | |
|---|---|---|---|---|---|---|---|---|---|---|---|---|---|---|---|---|---|
| [min⁻¹] | 8 | 10 | 12 | 14 | 16 | 18 | 20 | 22 | 24 | 26 | 28 | 30 | 32 | 34 | 36 | 38 | 40 |
| 864 | 0,321 | 0,388 | 0,458 | 0,529 | 0,602 | 0,674 | 0,747 | 0,820 | 0,949 | 1,08 | 1,21 | 1,34 | 1,47 | 1,60 | 1,73 | - | - |
| motor | 0,37 | 0,55 | | | 0,75 | | | 1,1 | | | 1,5 | | | 2,2 | | | |
| 1152 | 0,761 | 0,921 | 1,08 | 1,26 | 1,43 | 1,60 | 1,77 | 1,94 | 2,25 | 2,56 | 2,86 | 3,17 | 3,48 | 3,78 | 4,09 | - | - |
| motor | 1,1 | | | 1,5 | | 2,2 | | | 3 | | | 4 | | | 5,5 | | |
| 1728 | 2,57 | 3,11 | 3,66 | 4,23 | 4,81 | 5,39 | 5,97 | 6,56 | 7,59 | 8,63 | 9,66 | 10,7 | 11,7 | 12,8 | 13,8 | - | - |
| motor | 3 | 4 | | 5,5 | | | 7,5 | | 11 | | | | 15 | | | | |

*Fan test laboratory AMCA 210/99 Fig.12, Test Chamber. Performance certified is for installation type D - Ducted inlet, Ducted outlet. Performance ratings do not include the effects of appurtenances (accessories-belt cover, pulley & belt).*

*The A-weighted sound ratings shown have been calculated per AMCA International Standard 301. Values shown are for inlet LwiA sound power levels for installation Type D: ducted inlet, ducted outlet. Ratings include the effects of duct end correction.*

*Sound power frequency spectrum $L_{wrel}$ Page 54-55*

*Dimensions + Accessories Page 49-52*

# Performance Curve

## AXV 900, 60 Hz

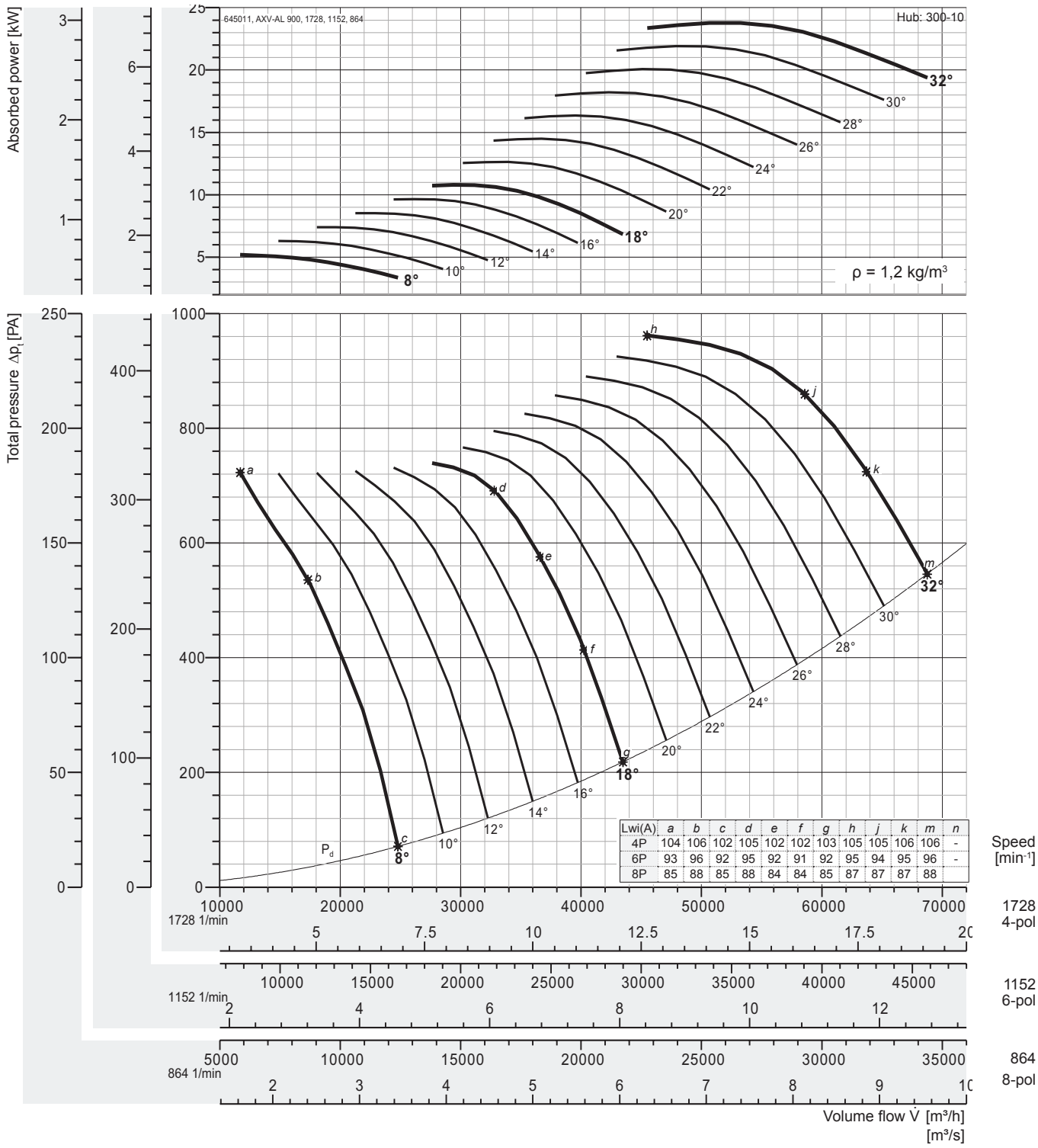


| Lwi(A) | a | b | c | d | e | f | g | h | j | k | m | n |
|---|---|---|---|---|---|---|---|---|---|---|---|---|
| 4P | 104 | 106 | 102 | 105 | 102 | 102 | 103 | 105 | 105 | 106 | 106 | - |
| 6P | 93 | 96 | 92 | 95 | 92 | 91 | 92 | 95 | 94 | 95 | 96 | - |
| 8P | 85 | 88 | 85 | 88 | 84 | 84 | 85 | 87 | 87 | 87 | 88 | |

### Peak absorbed power [kW]

** Out of Range*

| n | Pitch angle [°] | | | | | | | | | | | | | | | | |
|---|---|---|---|---|---|---|---|---|---|---|---|---|---|---|---|---|---|
| [min⁻¹] | 8 | 10 | 12 | 14 | 16 | 18 | 20 | 22 | 24 | 26 | 28 | 30 | 32 | 34 | 36 | 38 | 40 |
| 864 | 0,649 | 0,787 | 0,926 | 1,07 | 1,21 | 1,35 | 1,58 | 1,81 | 2,04 | 2,28 | 2,51 | 2,74 | 2,97 | - | - | - | - |
| motor | 0,75 | 1,1 | | | 1,5 | | 2,2 | | | 3 | | | | | | | |
| 1152 | 1,54 | 1,87 | 2,19 | 2,53 | 2,86 | 3,20 | 3,74 | 4,29 | 4,84 | 5,39 | 5,95 | 6,50 | 7,05 | - | - | - | - |
| motor | 2,2 | | | 3 | | 4 | | 5,5 | | | 7,5 | | | | | | |
| 1728 | 5,19 | 6,30 | 7,41 | 8,53 | 9,66 | 10,8 | 12,6 | 14,5 | 16,3 | 18,2 | 20,1 | 21,9 | 23,8 | - | - | - | - |
| motor | 5,5 | 7,5 | | 11 | | | 15 | | 18,5 | | 22 | | 30 | | | | |

*Fan test laboratory AMCA 210/99 Fig.12, Test Chamber. Performance certified is for installation type D - Ducted inlet, Ducted outlet. Performance ratings do not include the effects of appurtenances (accessories-belt cover, pulley & belt).*

*The A-weighted sound ratings shown have been calculated per AMCA International Standard 301. Values shown are for inlet LwiA sound power levels for installation Type D: ducted inlet, ducted outlet. Ratings include the effects of duct end correction.*

*Sound power frequency spectrum $L_{wrel}$ Page 54-55*

*Dimensions + Accessories Page 49-52*

# Performance Curve

## AXV 1000, 60 Hz

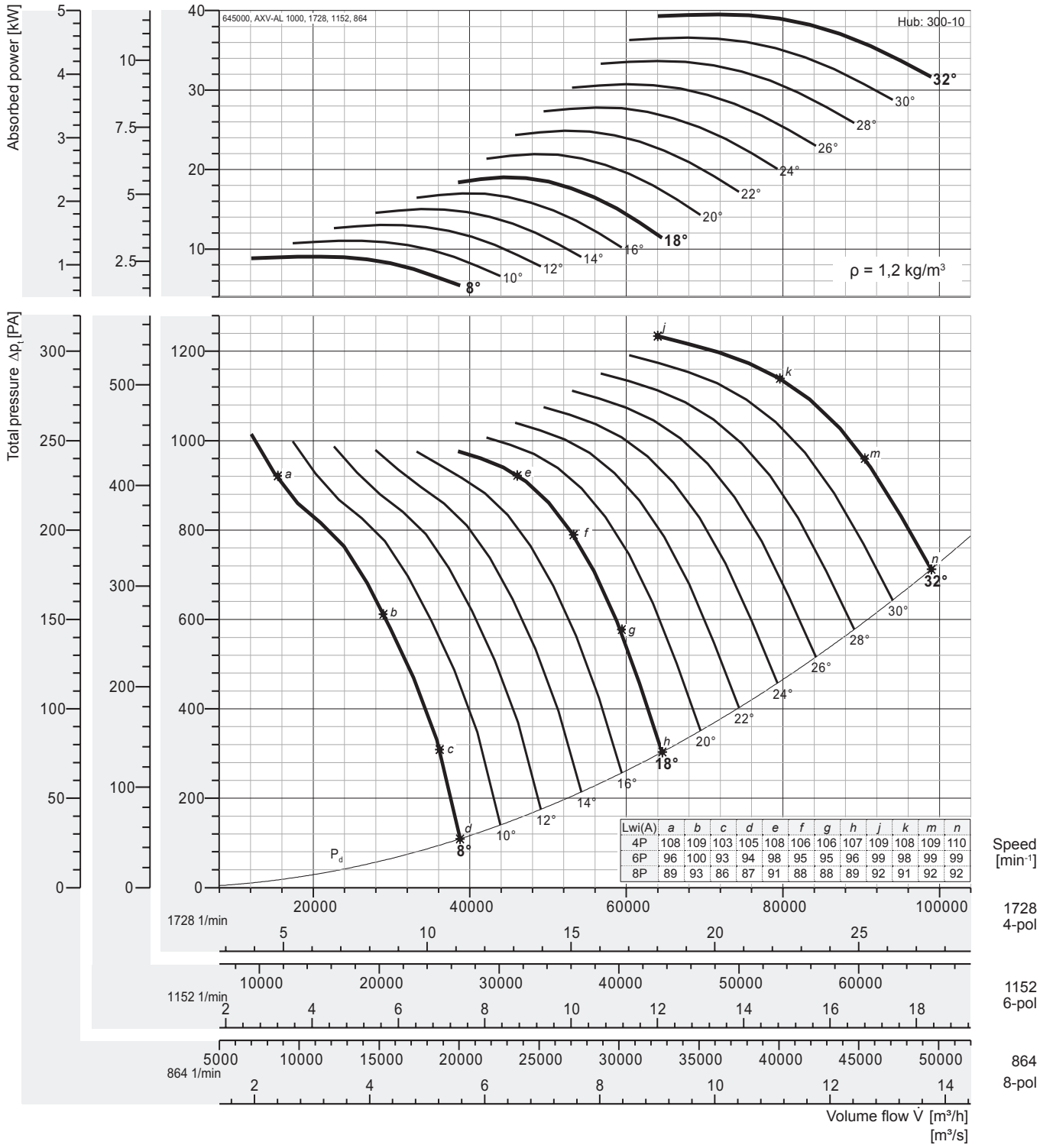


| Lwi(A) | a | b | c | d | e | f | g | h | j | k | m | n |
|---|---|---|---|---|---|---|---|---|---|---|---|---|
| 4P | 108 | 109 | 103 | 105 | 108 | 106 | 106 | 107 | 109 | 108 | 109 | 110 |
| 6P | 96 | 100 | 93 | 94 | 98 | 95 | 95 | 96 | 99 | 98 | 99 | 99 |
| 8P | 89 | 93 | 86 | 87 | 91 | 88 | 88 | 89 | 92 | 91 | 92 | 92 |

### Peak absorbed power [kW]

| n | Pitch angle [°] | | | | | | | | | | | | | | | | |
|---|---|---|---|---|---|---|---|---|---|---|---|---|---|---|---|---|---|
| [min⁻¹] | 8 | 10 | 12 | 14 | 16 | 18 | 20 | 22 | 24 | 26 | 28 | 30 | 32 | 34 | 36 | 38 | 40 |
| 864 | 1,13 | 1,38 | 1,63 | 1,88 | 2,13 | 2,38 | 2,74 | 3,11 | 3,47 | 3,84 | 4,21 | 4,57 | 4,94 | - | - | - | - |
| motor | 1,5 | | 2,2 | | | 3 | | 4 | | | 5,5 | | | | | | |
| 1152 | 2,68 | 3,27 | 3,86 | 4,45 | 5,04 | 5,63 | 6,50 | 7,37 | 8,24 | 9,10 | 9,97 | 10,8 | 11,7 | - | - | - | - |
| motor | 3 | 4 | | 5,5 | | 7,5 | | | 11 | | | | 15 | | | | |
| 1728 | 9,05 | 11,0 | 13,0 | 15,0 | 17,0 | 19,0 | 21,9 | 24,9 | 27,8 | 30,7 | 33,7 | 36,6 | 39,5 | - | - | - | - |
| motor | 11 | | 15 | | 18,5 | 22 | | 30 | | 37 | | | 45 | | | | |

*Fan test laboratory AMCA 210/99 Fig.12, Test Chamber. Performance certified is for installation type D - Ducted inlet, Ducted outlet. Performance ratings do not include the effects of appurtenances (accessories-belt cover, pulley & belt).*

*The A-weighted sound ratings shown have been calculated per AMCA International Standard 301. Values shown are for inlet LwiA sound power levels for installation Type D: ducted inlet, ducted outlet. Ratings include the effects of duct end correction.*

*Sound power frequency spectrum $L_{wrel}$ Page 54-55*

*Dimensions + Accessories Page 49-52*

# Performance Curve

## AXV 1120, 60 Hz

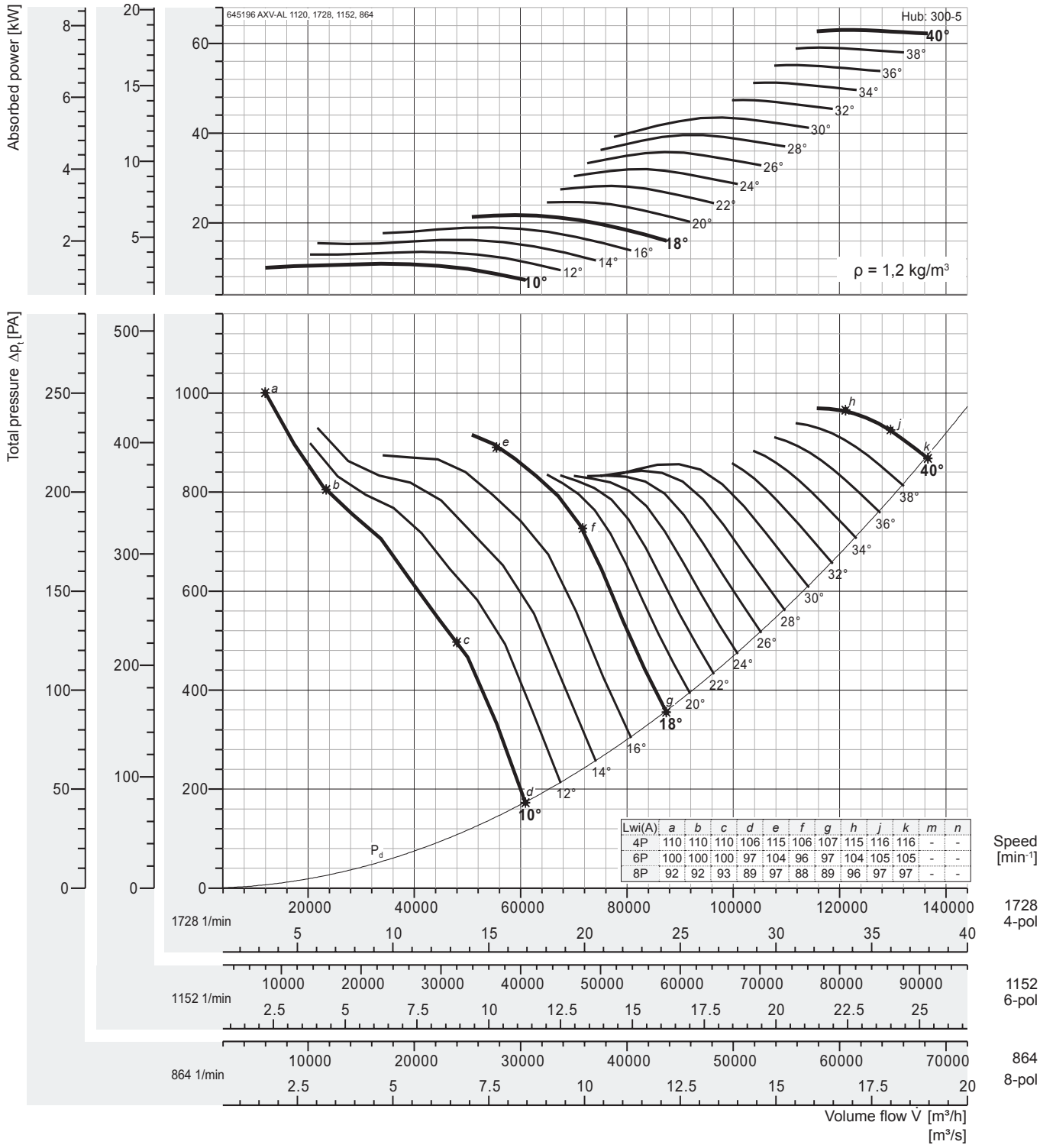


| Lwi(A) | a | b | c | d | e | f | g | h | j | k | m | n |
|---|---|---|---|---|---|---|---|---|---|---|---|---|
| 4P | 110 | 110 | 110 | 106 | 115 | 106 | 107 | 115 | 116 | 116 | - | - |
| 6P | 100 | 100 | 100 | 97 | 104 | 96 | 97 | 104 | 105 | 105 | - | - |
| 8P | 92 | 92 | 93 | 89 | 97 | 88 | 89 | 96 | 97 | 97 | - | - |

### Peak absorbed power [kW]

| n | Pitch angle [°] | | | | | | | | | | | | | | | | |
|---|---|---|---|---|---|---|---|---|---|---|---|---|---|---|---|---|---|
| [min⁻¹] | 8 | 10 | 12 | 14 | 16 | 18 | 20 | 22 | 24 | 26 | 28 | 30 | 32 | 34 | 36 | 38 | 40 |
| 864 | - | 1,36 | 1,70 | 2,03 | 2,37 | 2,72 | 3,08 | 3,53 | 4,00 | 4,48 | 4,95 | 5,44 | 5,93 | 6,41 | 6,90 | 7,39 | 7,88 |
| motor | | 1,5 | 2,2 | | 3 | | 4 | | | 5,5 | | | 7,5 | | | | 11 |
| 1152 | - | 3,23 | 4,02 | 4,81 | 5,62 | 6,44 | 7,31 | 8,37 | 9,48 | 10,6 | 11,7 | 12,9 | 14,0 | 15,2 | 16,3 | 17,5 | 18,7 |
| motor | | 4 | 5,5 | | 7,5 | | | 11 | | | 15 | | | 18,5 | | | 22 |
| 1728 | - | 10,9 | 13,6 | 16,2 | 19,0 | 21,7 | 24,7 | 28,3 | 32,0 | 35,8 | 39,6 | 43,5 | 47,4 | 51,3 | 55,2 | 59,1 | 63,0 |
| motor | | 11 | 15 | 18,5 | 22 | | 30 | | 37 | | 45 | | 55 | | 75 | | |

*Fan test laboratory AMCA 210/99 Fig.12, Test Chamber. Performance certified is for installation type D - Ducted inlet, Ducted outlet. Performance ratings do not include the effects of appurtenances (accessories-belt cover, pulley & belt).*

*The A-weighted sound ratings shown have been calculated per AMCA International Standard 301. Values shown are for inlet LwiA sound power levels for installation Type D: ducted inlet, ducted outlet. Ratings include the effects of duct end correction.*

*Sound power frequency spectrum $L_{wrel}$ Page 54-55*

*Dimensions + Accessories Page 49-52*

# Performance Curve

## AXV 1250, 60 Hz

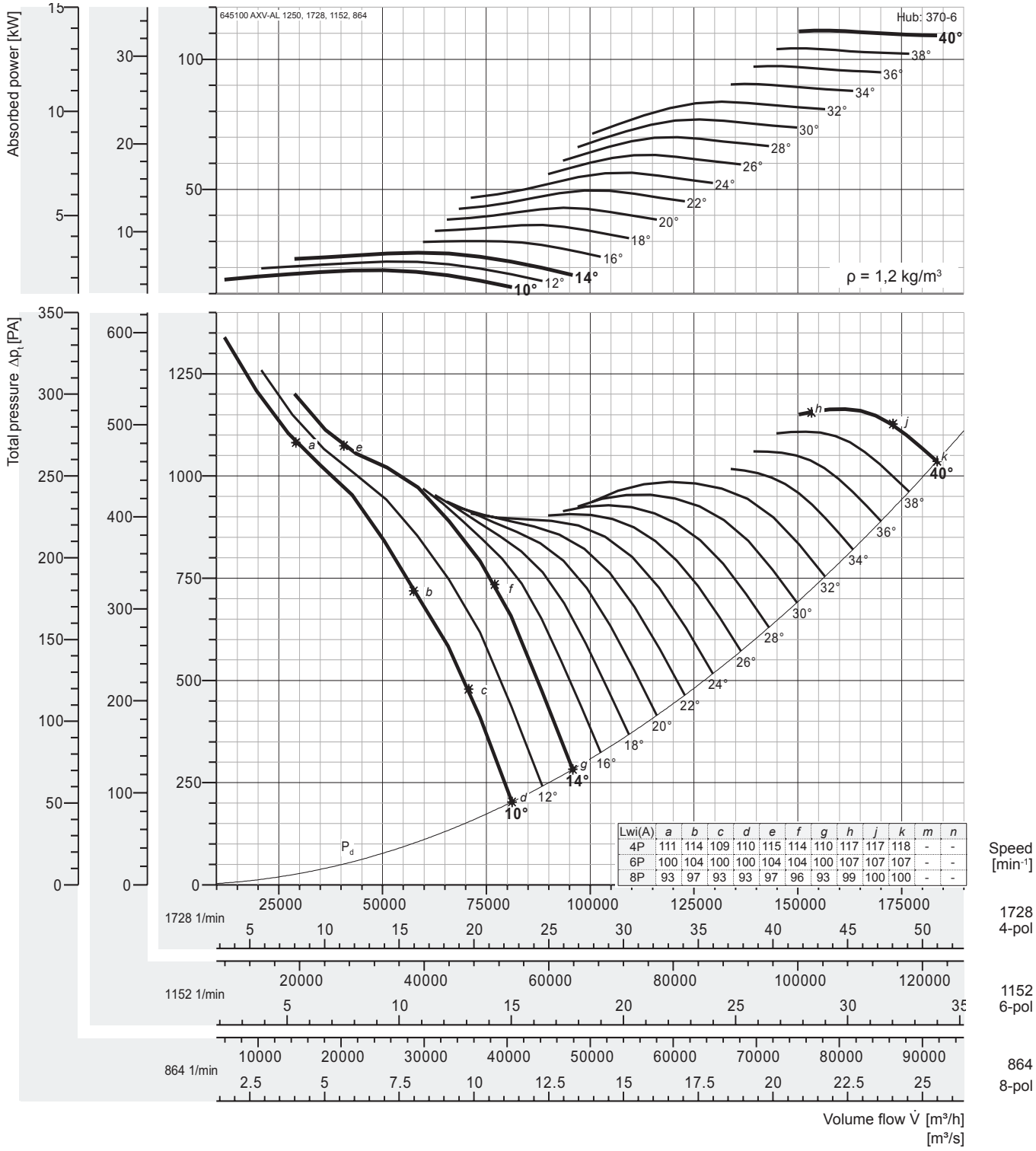


| Lwi(A) | a | b | c | d | e | f | g | h | j | k | m | n |
|---|---|---|---|---|---|---|---|---|---|---|---|---|
| 4P | 111 | 114 | 109 | 110 | 115 | 114 | 110 | 117 | 117 | 118 | - | - |
| 6P | 100 | 104 | 100 | 100 | 104 | 104 | 100 | 107 | 107 | 107 | - | - |
| 8P | 93 | 97 | 93 | 93 | 97 | 96 | 93 | 99 | 100 | 100 | - | - |

### Peak absorbed power [kW]

| n | Pitch angle [°] | | | | | | | | | | | | | | | | |
|---|---|---|---|---|---|---|---|---|---|---|---|---|---|---|---|---|---|
| [min⁻¹] | 8 | 10 | 12 | 14 | 16 | 18 | 20 | 22 | 24 | 26 | 28 | 30 | 32 | 34 | 36 | 38 | 40 |
| 864 | - | 2,38 | 2,79 | 3,21 | 3,77 | 4,54 | 5,37 | 6,20 | 7,05 | 7,90 | 8,76 | 9,62 | 10,5 | 11,3 | 12,2 | 13,0 | 13,7 |
| motor | | 3 | | 4 | | 5,5 | | 7,5 | | 11 | | | | 15 | | | |
| 1152 | - | 5,63 | 6,60 | 7,60 | 8,93 | 10,8 | 12,7 | 14,7 | 16,7 | 18,7 | 20,8 | 22,8 | 24,8 | 26,8 | 28,9 | 30,9 | 32,5 |
| motor | | 7,5 | | 11 | | | 15 | | 18,5 | 22 | | 30 | | | | 37 | |
| 1728 | - | 19,0 | 22,3 | 25,7 | 30,2 | 36,3 | 43,0 | 49,6 | 56,4 | 63,2 | 70,1 | 76,9 | 83,8 | 90,6 | 97,4 | 104,2 | 109,6 |
| motor | | 22 | 30 | | 37 | | 45 | 55 | 75 | | | 90 | | 110 | | | |

*Fan test laboratory AMCA 210/99 Fig.12, Test Chamber. Performance certified is for installation type D - Ducted inlet, Ducted outlet. Performance ratings do not include the effects of appurtenances (accessories-belt cover, pulley & belt).*

*The A-weighted sound ratings shown have been calculated per AMCA International Standard 301. Values shown are for inlet LwiA sound power levels for installation Type D: ducted inlet, ducted outlet. Ratings include the effects of duct end correction.*

*Sound power frequency spectrum $L_{wrel}$ Page 54-55*

*Dimensions + Accessories Page 49-52*

# Performance Curve

## AXV 1400, 60 Hz

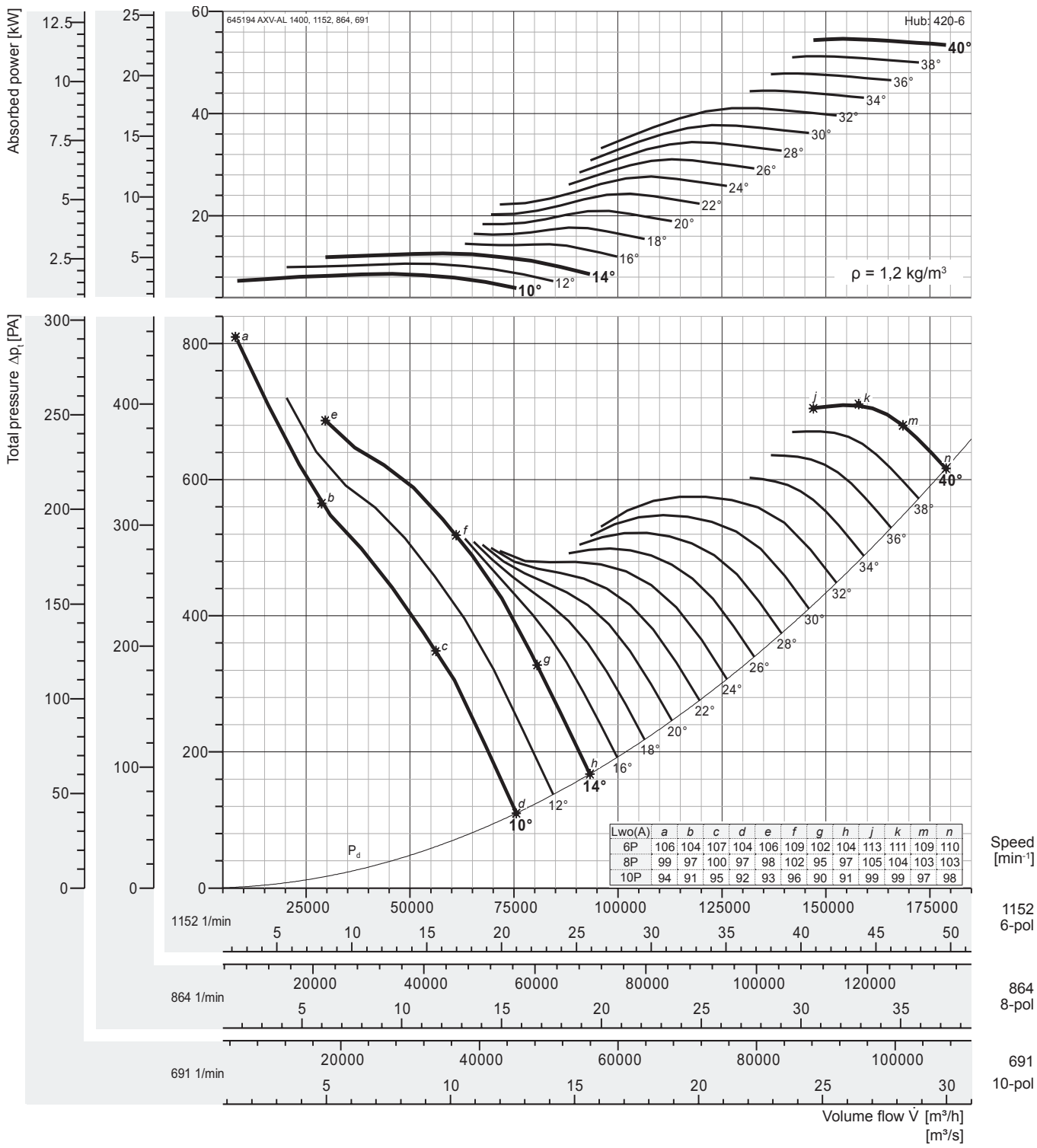


| Lwo(A) | a | b | c | d | e | f | g | h | j | k | m | n |
|---|---|---|---|---|---|---|---|---|---|---|---|---|
| 6P | 106 | 104 | 107 | 104 | 106 | 109 | 102 | 104 | 113 | 111 | 109 | 110 |
| 8P | 99 | 97 | 100 | 97 | 98 | 102 | 95 | 97 | 105 | 104 | 103 | 103 |
| 10P | 94 | 91 | 95 | 92 | 93 | 96 | 90 | 91 | 99 | 99 | 97 | 98 |

### Peak absorbed power [kW]

| n | Pitch angle [°] | | | | | | | | | | | | | | | | |
|---|---|---|---|---|---|---|---|---|---|---|---|---|---|---|---|---|---|
| [min⁻¹] | 8 | 10 | 12 | 14 | 16 | 18 | 20 | 22 | 24 | 26 | 28 | 30 | 32 | 34 | 36 | 38 | 40 |
| 691 | - | 1,86 | 2,29 | 2,73 | 3,13 | 3,81 | 4,52 | 5,25 | 5,98 | 6,70 | 7,42 | 8,15 | 8,86 | 9,60 | 10,3 | 11,0 | 11,8 |
| motor | | 2,2 | 3 | | 4 | | 5,5 | | 7,5 | | | 11 | | | | | 15 |
| 864 | - | 3,63 | 4,47 | 5,33 | 6,13 | 7,45 | 8,84 | 10,3 | 11,7 | 13,1 | 14,5 | 15,9 | 17,3 | 18,8 | 20,2 | 21,6 | 23,0 |
| motor | | 4 | 5,5 | | 7,5 | | 11 | | 15 | | | 18,5 | | 22 | | | 30 |
| 1152 | - | 8,60 | 10,6 | 12,6 | 14,5 | 17,6 | 20,9 | 24,3 | 27,7 | 31,1 | 34,4 | 37,7 | 41,1 | 44,5 | 47,9 | 51,2 | 54,6 |
| motor | | 11 | | 15 | | 18,5 | 22 | 30 | | 37 | | 45 | | | 55 | | |

*Fan test laboratory AMCA 210/99 Fig.15, Test Chamber. Performance certified is for installation type A - Free inlet, Free outlet. Performance ratings do not include the effects of appurtenances (accessories-belt cover, pulley & belt).*

*The A-weighted sound ratings shown have been calculated per AMCA International Standard 301. Values shown are for outlet LwoA sound power levels for installation Type A: free inlet, free outlet.*

*Sound power frequency spectrum $L_{wrel}$ Page 54-55*

*Dimensions + Accessories Page 49-52*

# Performance Curve

## AXV 1600, 60 Hz

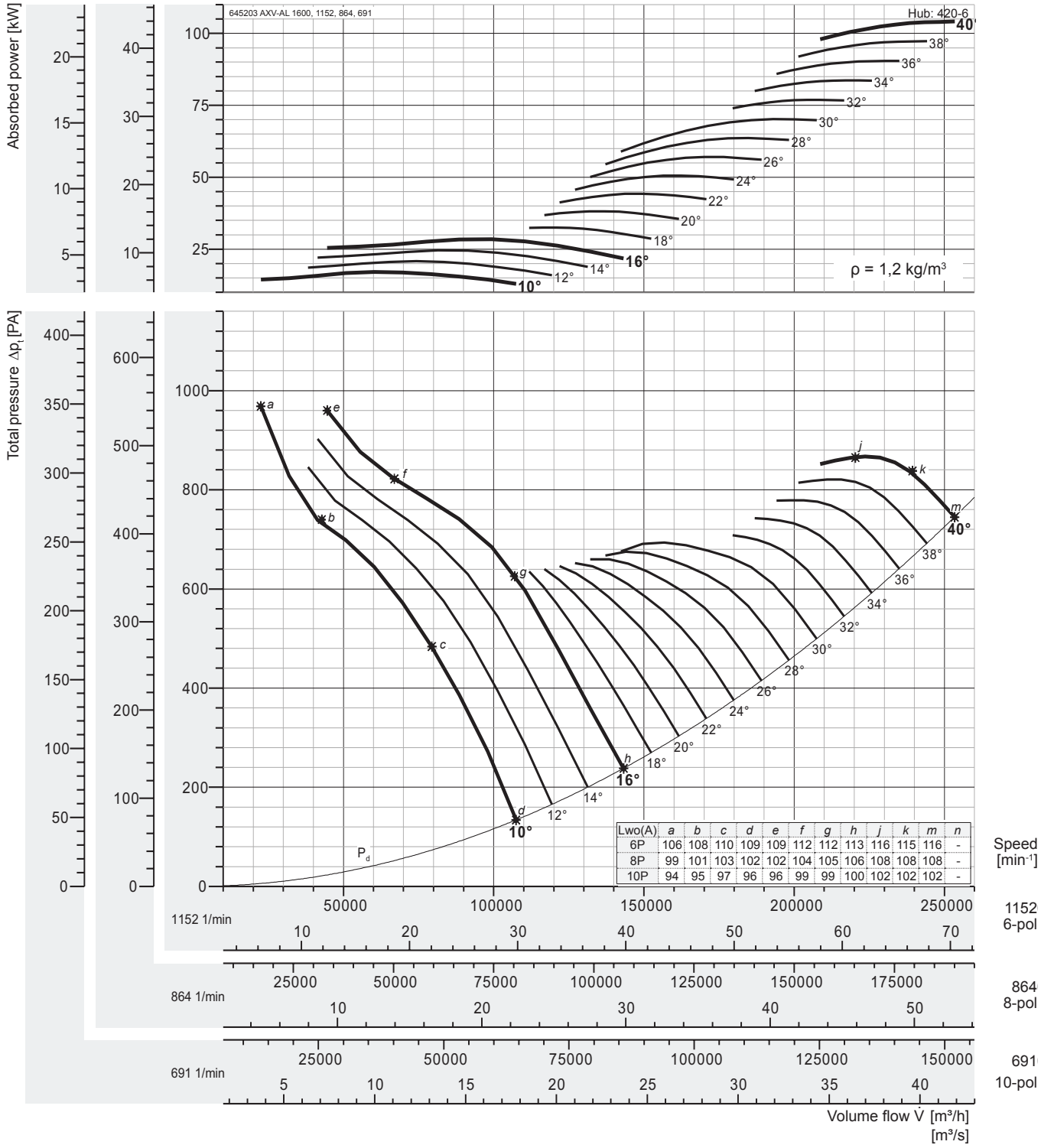


### Peak absorbed power [kW]

| n | Pitch angle [°] | | | | | | | | | | | | | | | | |
|---|---|---|---|---|---|---|---|---|---|---|---|---|---|---|---|---|---|
| [min⁻¹] | 8 | 10 | 12 | 14 | 16 | 18 | 20 | 22 | 24 | 26 | 28 | 30 | 32 | 34 | 36 | 38 | 40 |
| 691 | - | 3,68 | 4,49 | 5,31 | 6,13 | 7,02 | 8,24 | 9,55 | 10,9 | 12,3 | 13,7 | 15,2 | 16,6 | 18,1 | 19,5 | 21,0 | 22,5 |
| motor | | 4 | 5,5 | | 7,5 | | 11 | | | 15 | | 18,5 | | | 22 | | 30 |
| 864 | - | 7,19 | 8,77 | 10,4 | 12,0 | 13,7 | 16,1 | 18,5 | 21,3 | 24,1 | 26,8 | 29,6 | 32,4 | 35,3 | 38,1 | 41,0 | 43,9 |
| motor | | 7,5 | 11 | | 15 | | 18,5 | | 22 | 30 | | | 37 | | 45 | | |
| 1152 | - | 17,0 | 20,8 | 24,6 | 28,4 | 32,5 | 38,2 | 44,3 | 50,6 | 57,0 | 63,6 | 70,2 | 76,9 | 83,6 | 90,4 | 97,3 | 104,1 |
| motor | | 18,5 | 22 | 30 | | 37 | 45 | | 55 | 75 | | | 90 | | 110 | | |

*Fan test laboratory AMCA 210/99 Fig.15, Test Chamber. Performance certified is for installation type A - Free inlet, Free outlet. Performance ratings do not include the effects of appurtenances (accessories-belt cover, pulley & belt).*

*The A-weighted sound ratings shown have been calculated per AMCA International Standard 301. Values shown are for outlet LwoA sound power levels for installation Type A: free inlet, free outlet.*

*Sound power frequency spectrum $L_{wrel}$ Page 54-55*

*Dimensions + Accessories Page 49-52*

# Performance Curve

## AXV 1800, 60 Hz

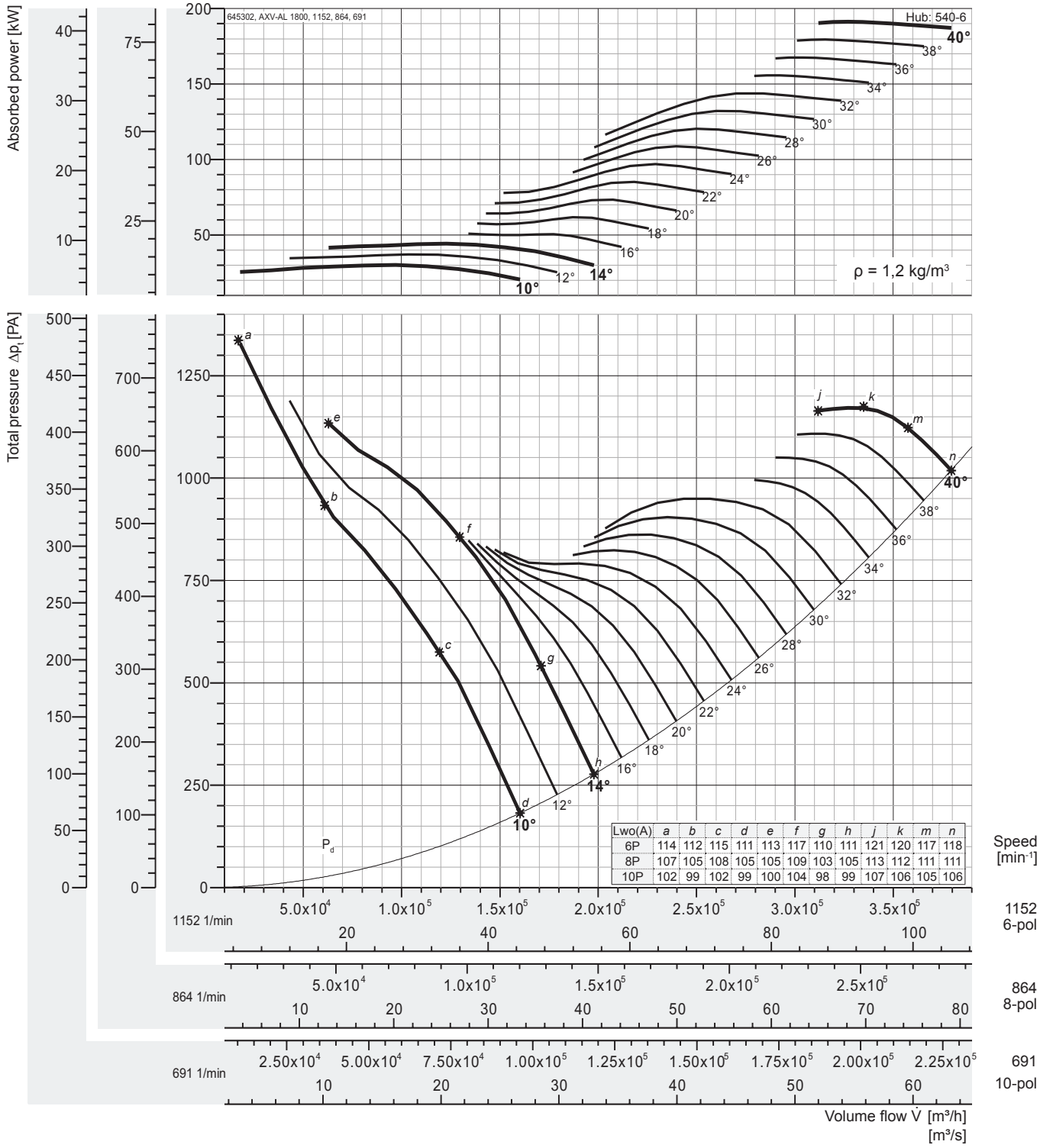


| Lwo(A) | a | b | c | d | e | f | g | h | j | k | m | n |
|---|---|---|---|---|---|---|---|---|---|---|---|---|
| 6P | 114 | 112 | 115 | 111 | 113 | 117 | 110 | 111 | 121 | 120 | 117 | 118 |
| 8P | 107 | 105 | 108 | 105 | 105 | 109 | 103 | 105 | 113 | 112 | 111 | 111 |
| 10P | 102 | 99 | 102 | 99 | 100 | 104 | 98 | 99 | 107 | 106 | 105 | 106 |

### Peak absorbed power [kW]

| n | Pitch angle [°] | | | | | | | | | | | | | | | | |
|---|---|---|---|---|---|---|---|---|---|---|---|---|---|---|---|---|---|
| [min⁻¹] | 8 | 10 | 12 | 14 | 16 | 18 | 20 | 22 | 24 | 26 | 28 | 30 | 32 | 34 | 36 | 38 | 40 |
| 691 | - | 6,50 | 8,01 | 9,56 | 11,0 | 13,3 | 15,8 | 18,4 | 20,9 | 23,5 | 26,0 | 28,5 | 31,0 | 33,6 | 36,2 | 38,7 | 41,3 |
| motor | | 7,5 | 11 | | | 15 | 18,5 | | 22 | 30 | | | 37 | | | 45 | |
| 864 | - | 12,7 | 15,7 | 18,7 | 21,4 | 26,1 | 30,9 | 35,9 | 40,9 | 45,9 | 50,8 | 55,8 | 60,7 | 65,7 | 70,7 | 75,7 | 80,7 |
| motor | | 15 | 18,5 | 22 | | 30 | 37 | | 45 | 55 | | 75 | | | | 90 | |
| 1152 | - | 30,0 | 37,0 | 44,3 | 50,8 | 61,8 | 73,3 | 85,2 | 97,0 | 108,7 | 120,5 | 132,2 | 143,8 | 155,8 | 167,6 | 179,5 | 191,3 |
| motor | | 30 | 37 | 45 | 55 | 75 | | 90 | 110 | | 132 | 160 | | | 200 | | |

*Fan test laboratory AMCA 210/99 Fig.15, Test Chamber. Performance certified is for installation type A - Free inlet, Free outlet. Performance ratings do not include the effects of appurtenances (accessories-belt cover, pulley & belt).*

*The A-weighted sound ratings shown have been calculated per AMCA International Standard 301. Values shown are for outlet LwoA sound power levels for installation Type A: free inlet, free outlet.*

*Sound power frequency spectrum $L_{wrel}$ Page 54-55*

*Dimensions + Accessories Page 49-52*

# Performance Curve

## AXV 2000, 60 Hz

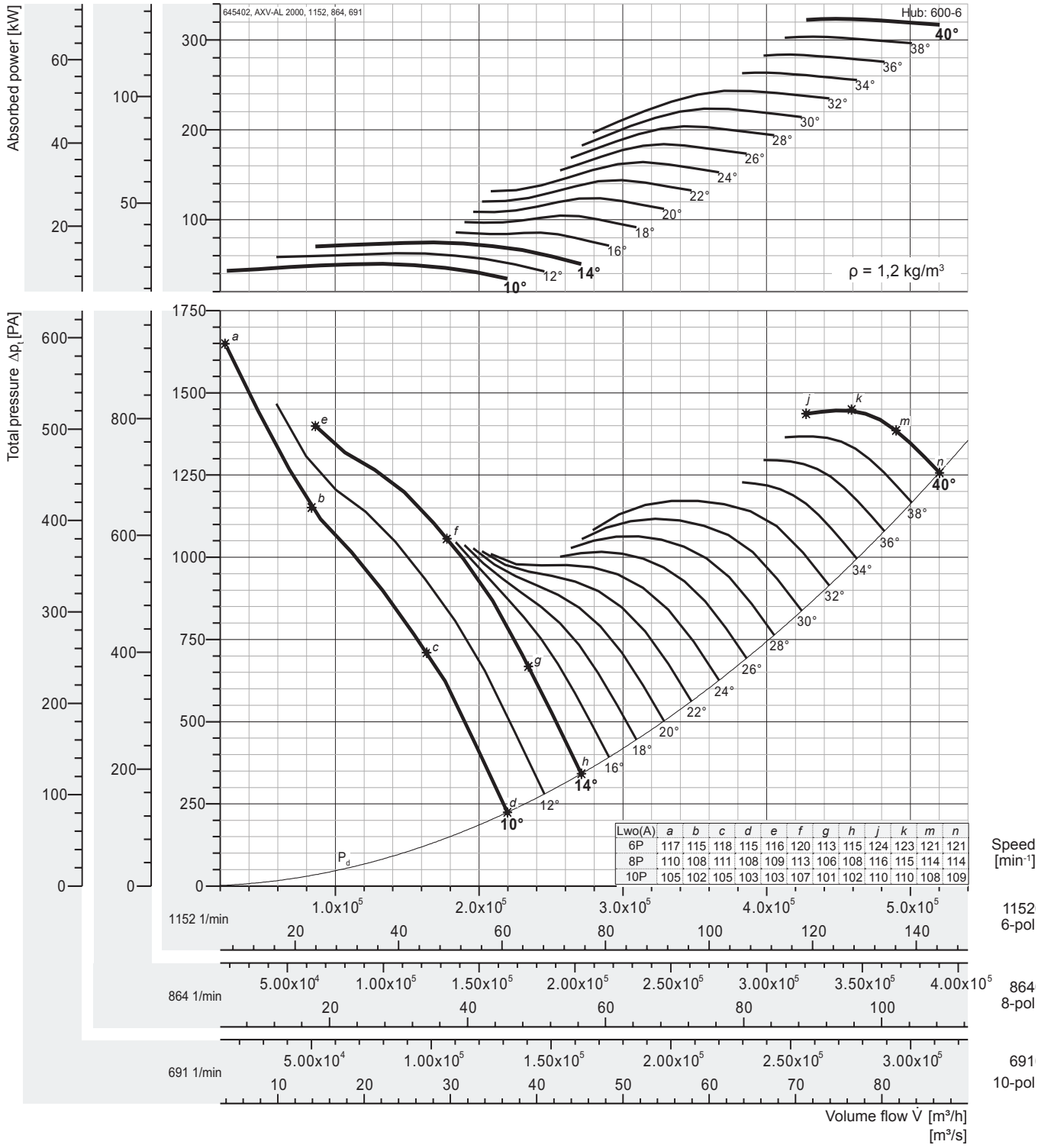


| Lwo(A) | a | b | c | d | e | f | g | h | j | k | m | n |
|---|---|---|---|---|---|---|---|---|---|---|---|---|
| 6P | 117 | 115 | 118 | 115 | 116 | 120 | 113 | 115 | 124 | 123 | 121 | 121 |
| 8P | 110 | 108 | 111 | 108 | 109 | 113 | 106 | 108 | 116 | 115 | 114 | 114 |
| 10P | 105 | 102 | 105 | 103 | 103 | 107 | 101 | 102 | 110 | 110 | 108 | 109 |

### Peak absorbed power [kW]

| n | Pitch angle [°] | | | | | | | | | | | | | | | | |
|---|---|---|---|---|---|---|---|---|---|---|---|---|---|---|---|---|---|
| [min⁻¹] | 8 | 10 | 12 | 14 | 16 | 18 | 20 | 22 | 24 | 26 | 28 | 30 | 32 | 34 | 36 | 38 | 40 |
| 691 | - | 11,0 | 13,6 | 16,2 | 18,5 | 22,6 | 26,8 | 31,1 | 35,4 | 39,7 | 44,0 | 48,3 | 52,5 | 56,9 | 61,2 | 65,5 | 69,8 |
| motor | | 11 | 15 | 18,5 | | 30 | | 37 | | 45 | | 55 | | 75 | | | |
| 864 | - | 21,5 | 26,5 | 31,6 | 36,3 | 44,1 | 52,3 | 60,8 | 69,2 | 77,6 | 86,0 | 94,3 | 102,6 | 111,2 | 119,6 | 128,1 | 136,5 |
| motor | | 22 | 30 | 37 | | 45 | 55 | 75 | | 90 | | 110 | | 132 | | | 160 |
| 1152 | - | 50,9 | 62,8 | 74,9 | 86,0 | 104,5 | 124,1 | 144,1 | 164,0 | 183,9 | 203,8 | 223,6 | 243,3 | 263,6 | 283,6 | 303,6 | 323,6 |
| motor | | 55 | 75 | | 90 | 110 | 132 | 160 | 200 | | 250 | | | 315 | | | 355 |

*Fan test laboratory AMCA 210/99 Fig.15, Test Chamber. Performance certified is for installation type A - Free inlet, Free outlet. Performance ratings do not include the effects of appurtenances (accessories-belt cover, pulley & belt).*

*The A-weighted sound ratings shown have been calculated per AMCA International Standard 301. Values shown are for outlet LwoA sound power levels for installation Type A: free inlet, free outlet.*

*Sound power frequency spectrum $L_{wrel}$ Page 54-55*

*Dimensions + Accessories Page 49-52*

# Performance Curve

## AXV 2200, 60 Hz

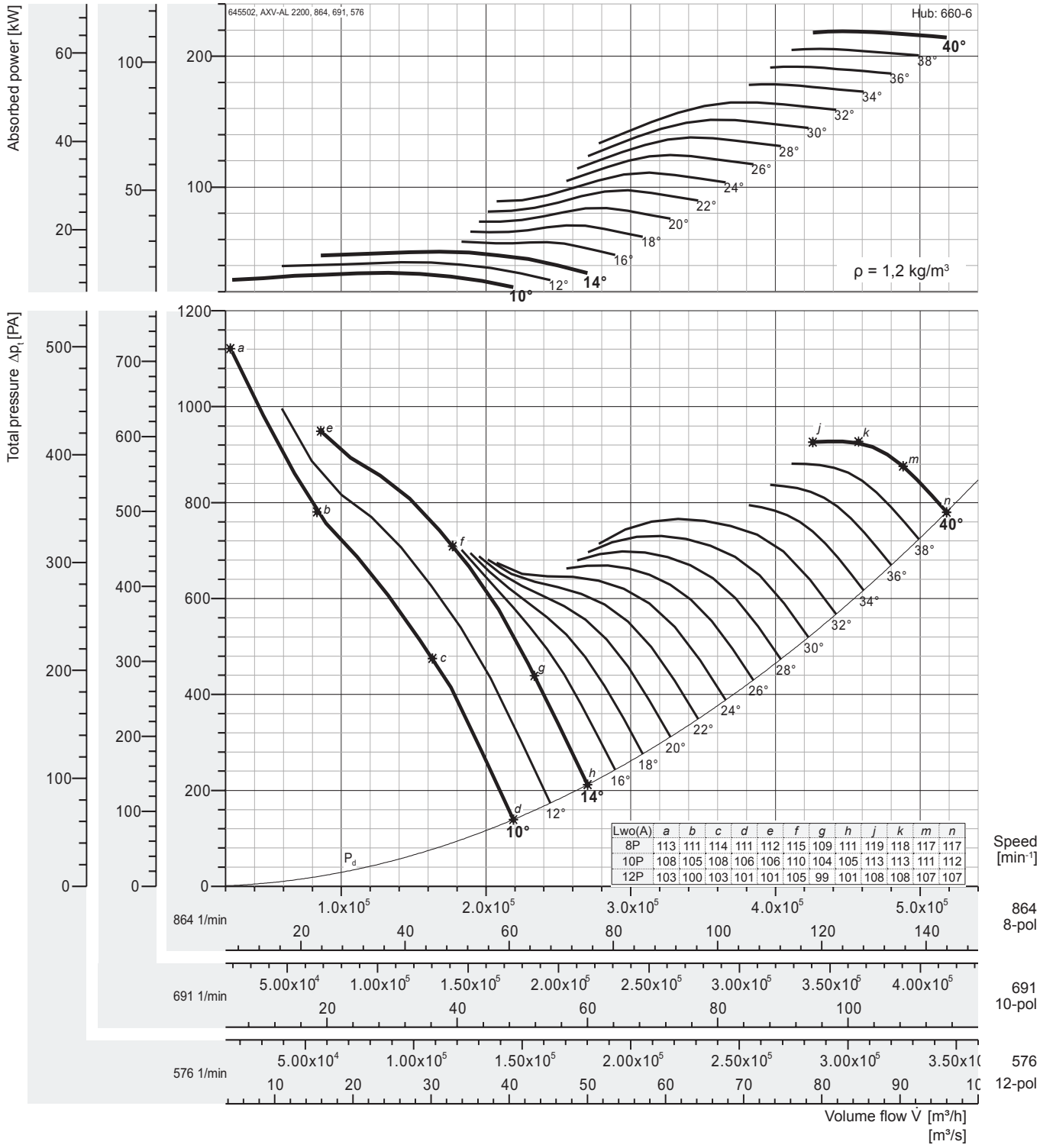


| Lwo(A) | a | b | c | d | e | f | g | h | j | k | m | n |
|---|---|---|---|---|---|---|---|---|---|---|---|---|
| 8P | 113 | 111 | 114 | 111 | 112 | 115 | 109 | 111 | 119 | 118 | 117 | 117 |
| 10P | 108 | 105 | 108 | 106 | 106 | 110 | 104 | 105 | 113 | 113 | 111 | 112 |
| 12P | 103 | 100 | 103 | 101 | 101 | 105 | 99 | 101 | 108 | 108 | 107 | 107 |

### Peak absorbed power [kW]

| n | Pitch angle [°] | | | | | | | | | | | | | | | | |
|---|---|---|---|---|---|---|---|---|---|---|---|---|---|---|---|---|---|
| [min⁻¹] | 8 | 10 | 12 | 14 | 16 | 18 | 20 | 22 | 24 | 26 | 28 | 30 | 32 | 34 | 36 | 38 | 40 |
| 576 | - | 10,2 | 12,6 | 15,0 | 17,3 | 21,0 | 24,9 | 28,9 | 32,9 | 36,9 | 40,9 | 44,9 | 48,8 | 52,9 | 56,9 | 60,9 | 64,9 |
| motor | | 11 | 15 | | 18,5 | 22 | 30 | | 37 | | 45 | | 55 | | 75 | | |
| 691 | - | 17,6 | 21,7 | 25,9 | 29,8 | 36,2 | 43,0 | 49,9 | 56,8 | 63,7 | 70,6 | 77,5 | 84,3 | 91,3 | 98,2 | 105,2 | 112,1 |
| motor | | 18,5 | 22 | 30 | | 37 | 45 | 55 | 75 | | | 90 | | 110 | | | 132 |
| 864 | - | 34,5 | 42,5 | 50,7 | 58,3 | 70,8 | 84,0 | 97,6 | 111,1 | 124,6 | 138,0 | 151,4 | 164,8 | 178,5 | 192,1 | 205,6 | 219,2 |
| motor | | 37 | 45 | 55 | 75 | | 90 | 110 | 132 | | 160 | | 200 | | | 250 | |

*Fan test laboratory AMCA 210/99 Fig.15, Test Chamber. Performance certified is for installation type A - Free inlet, Free outlet. Performance ratings do not include the effects of appurtenances (accessories-belt cover, pulley & belt).*

*The A-weighted sound ratings shown have been calculated per AMCA International Standard 301. Values shown are for outlet LwoA sound power levels for installation Type A: free inlet, free outlet.*

*Sound power frequency spectrum $L_{wrel}$ Page 54-55*

*Dimensions + Accessories Page 49-52*

# Performance Curve

## AXV 2400, 60 Hz

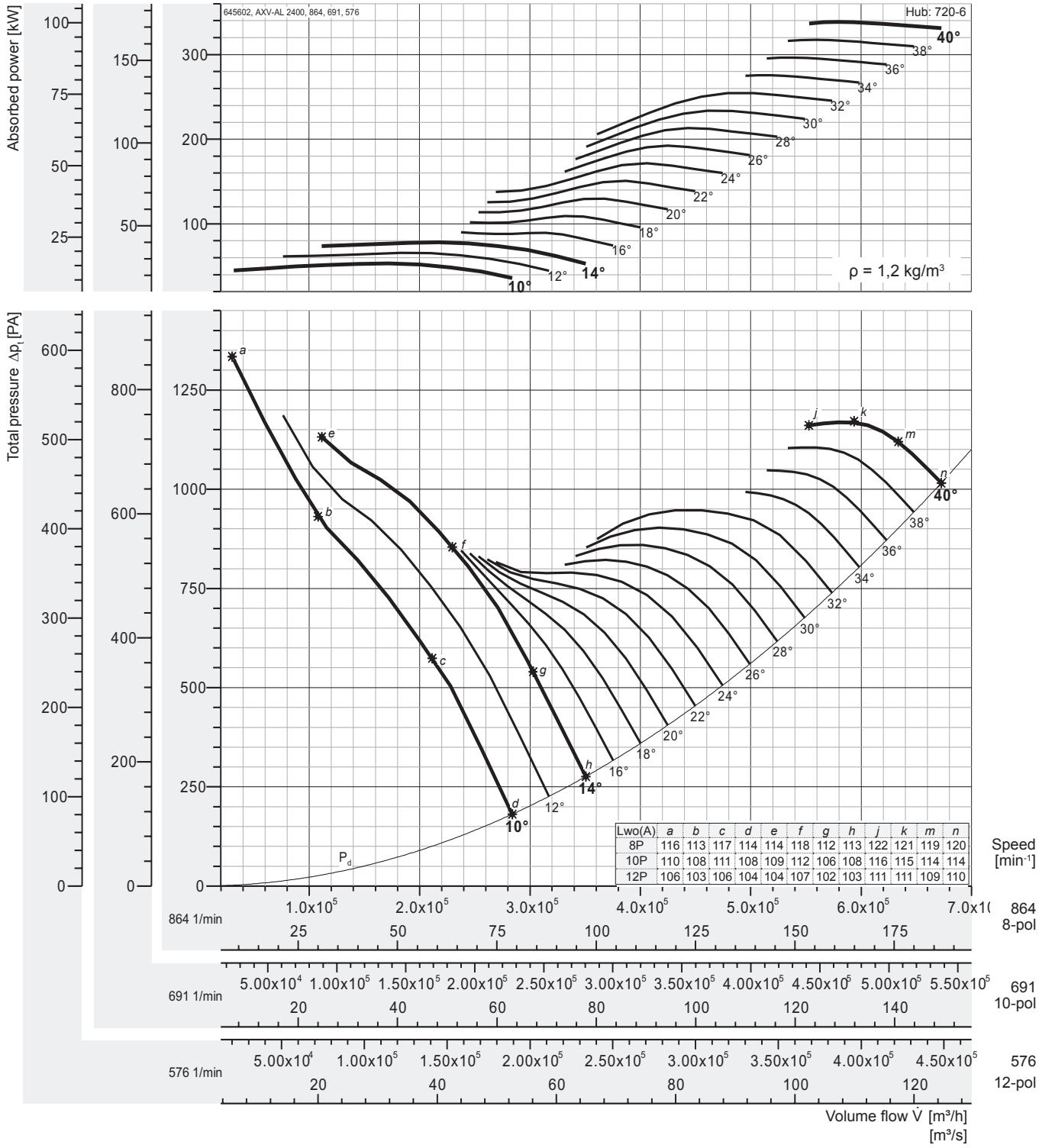


### Peak absorbed power [kW]

| n | Pitch angle [°] | | | | | | | | | | | | | | | | |
|---|---|---|---|---|---|---|---|---|---|---|---|---|---|---|---|---|---|
| [min⁻¹] | 8 | 10 | 12 | 14 | 16 | 18 | 20 | 22 | 24 | 26 | 28 | 30 | 32 | 34 | 36 | 38 | 40 |
| 576 | - | 15,8 | 19,5 | 23,2 | 26,7 | 32,4 | 38,4 | 44,6 | 50,8 | 57,0 | 63,2 | 69,3 | 75,4 | 81,7 | 87,9 | 94,1 | 100,3 |
| motor | | 18,5 | 22 | 30 | | 37 | 45 | | 55 | 75 | | | 90 | | | 110 | |
| 691 | - | 27,3 | 33,6 | 40,1 | 46,0 | 55,9 | 66,4 | 77,1 | 87,8 | 98,4 | 109,0 | 119,6 | 130,2 | 141,0 | 151,7 | 162,4 | 173,1 |
| motor | | 30 | 37 | 45 | 55 | 75 | | 90 | | 110 | | 132 | | 160 | | 200 | |
| 864 | - | 53,3 | 65,7 | 78,3 | 89,9 | 109,3 | 129,7 | 150,7 | 171,5 | 192,4 | 213,1 | 233,8 | 254,5 | 275,7 | 296,6 | 317,5 | 338,4 |
| motor | | 55 | 75 | 90 | | 110 | 132 | 160 | 200 | | 250 | | 315 | | | 355 | |

*Fan test laboratory AMCA 210/99 Fig.15, Test Chamber. Performance certified is for installation type A - Free inlet, Free outlet. Performance ratings do not include the effects of appurtenances (accessories-belt cover, pulley & belt).*

*The A-weighted sound ratings shown have been calculated per AMCA International Standard 301. Values shown are for outlet LwoA sound power levels for installation Type A: free inlet, free outlet.*

*Sound power frequency spectrum $L_{wrel}$ Page 54-55*

*Dimensions + Accessories Page 49-52*

# Performance Curve

## AXV 2500, 60 Hz

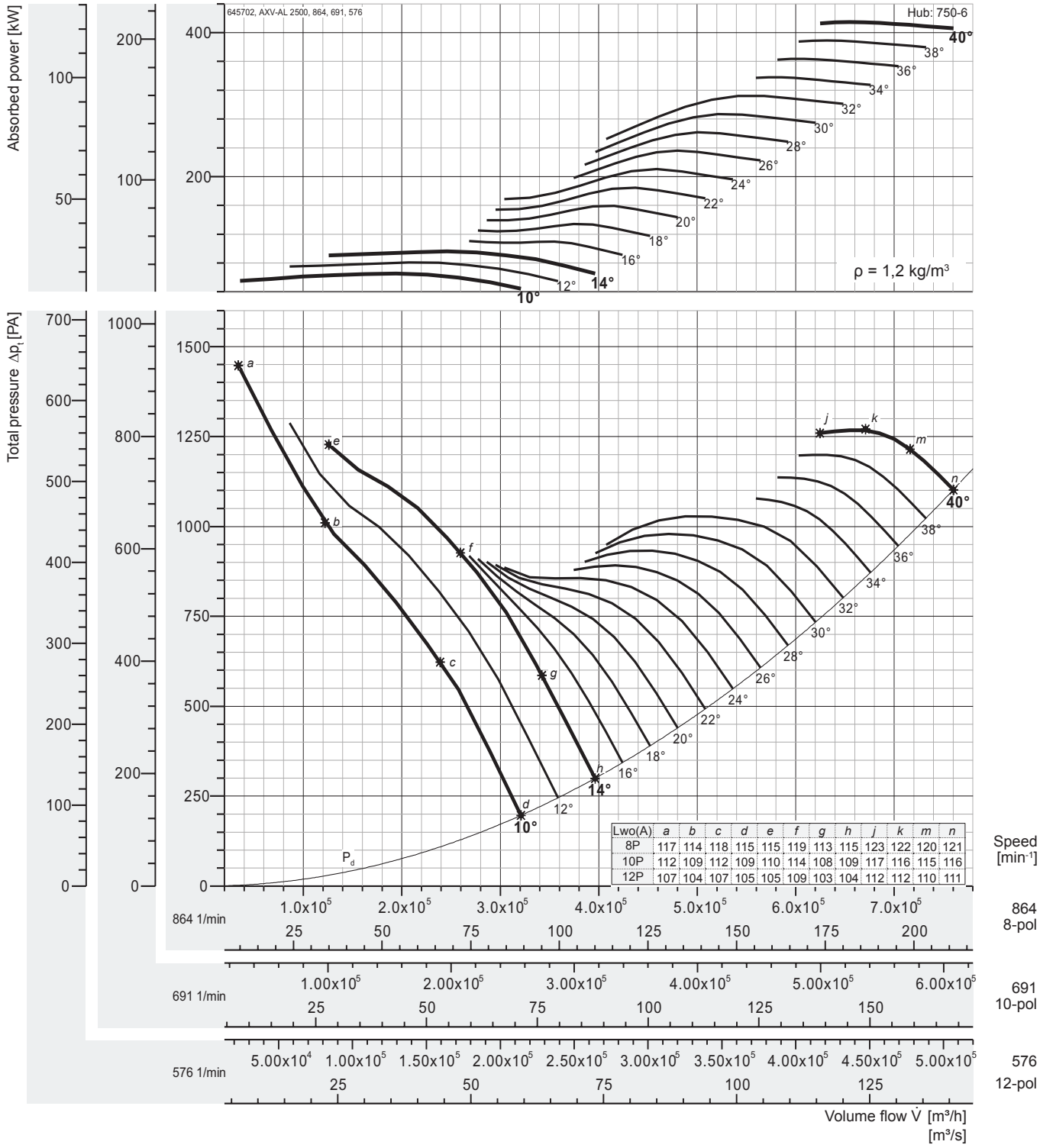


| Lwo(A) | a | b | c | d | e | f | g | h | j | k | m | n |
|---|---|---|---|---|---|---|---|---|---|---|---|---|
| 8P | 117 | 114 | 118 | 115 | 115 | 119 | 113 | 115 | 123 | 122 | 120 | 121 |
| 10P | 112 | 109 | 112 | 109 | 110 | 114 | 108 | 109 | 117 | 116 | 115 | 116 |
| 12P | 107 | 104 | 107 | 105 | 105 | 109 | 103 | 104 | 112 | 112 | 110 | 111 |

### Peak absorbed power [kW]

| n | Pitch angle [°] | | | | | | | | | | | | | | | | |
|---|---|---|---|---|---|---|---|---|---|---|---|---|---|---|---|---|---|
| [min⁻¹] | 8 | 10 | 12 | 14 | 16 | 18 | 20 | 22 | 24 | 26 | 28 | 30 | 32 | 34 | 36 | 38 | 40 |
| 576 | - | 19,4 | 23,9 | 28,4 | 32,7 | 39,7 | 47,1 | 54,7 | 62,3 | 69,9 | 77,4 | 84,9 | 92,4 | 100,1 | 107,7 | 115,3 | 122,9 |
| motor | | 22 | 30 | | 37 | 45 | 55 | | 75 | | 90 | | 110 | | | 132 | |
| 691 | - | 33,4 | 41,2 | 49,1 | 56,4 | 68,6 | 81,4 | 94,5 | 107,6 | 120,7 | 133,7 | 146,7 | 159,6 | 172,9 | 186,0 | 199,1 | 212,3 |
| motor | | 37 | 45 | 55 | 75 | | 90 | 110 | | 132 | 160 | | | 200 | | | 250 |
| 864 | - | 65,3 | 80,5 | 96,0 | 110,3 | 134,1 | 159,1 | 184,7 | 210,3 | 235,9 | 261,3 | 286,7 | 312,0 | 338,0 | 363,6 | 389,3 | 414,9 |
| motor | | 75 | 90 | 110 | 132 | 160 | | 200 | 250 | | 315 | | | 355 | 450 | | |

*Fan test laboratory AMCA 210/99 Fig.15, Test Chamber. Performance certified is for installation type A - Free inlet, Free outlet. Performance ratings do not include the effects of appurtenances (accessories-belt cover, pulley & belt).*

*The A-weighted sound ratings shown have been calculated per AMCA International Standard 301. Values shown are for outlet LwoA sound power levels for installation Type A: free inlet, free outlet.*

*Sound power frequency spectrum $L_{wrel}$ Page 54-55*

*Dimensions + Accessories Page 49-52*

# Performance Curve

## AXV 2600, 60 Hz

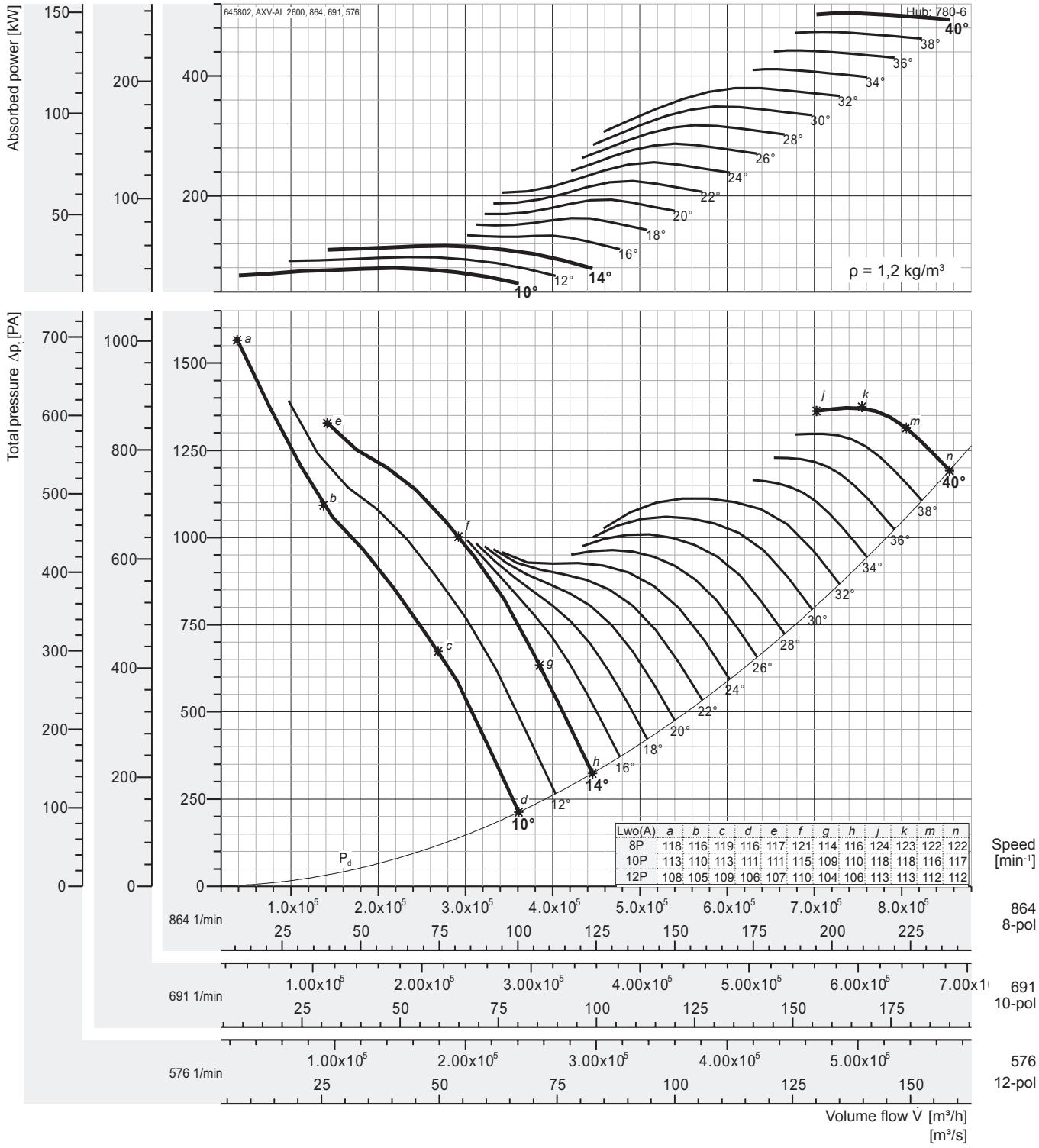


### Peak absorbed power [kW]

| n | Pitch angle [°] | | | | | | | | | | | | | | | | |
|---|---|---|---|---|---|---|---|---|---|---|---|---|---|---|---|---|---|
| [min⁻¹] | 8 | 10 | 12 | 14 | 16 | 18 | 20 | 22 | 24 | 26 | 28 | 30 | 32 | 34 | 36 | 38 | 40 |
| 576 | - | 23,5 | 29,0 | 34,6 | 39,8 | 48,3 | 57,3 | 66,6 | 75,8 | 85,0 | 94,2 | 103,3 | 112,4 | 121,8 | 131,0 | 140,3 | 149,5 |
| motor | | 30 | | 37 | 45 | 55 | 75 | | 90 | | 110 | | 132 | | | 160 | |
| 691 | - | 40,6 | 50,1 | 59,8 | 68,6 | 83,4 | 99,0 | 115,0 | 130,9 | 146,8 | 162,6 | 178,4 | 194,1 | 210,3 | 226,3 | 242,2 | 258,2 |
| motor | | 45 | 55 | 75 | | 90 | 110 | 132 | | 160 | 200 | | | 250 | | | 315 |
| 864 | - | 79,4 | 98,0 | 116,8 | 134,2 | 163,1 | 193,5 | 224,7 | 255,9 | 286,9 | 317,9 | 348,7 | 379,5 | 411,1 | 442,3 | 473,5 | 504,7 |
| motor | | 90 | 110 | 160 | | 200 | | 250 | 315 | | 355 | | 450 | | | 500 | 560 |

*Fan test laboratory AMCA 210/99 Fig.15, Test Chamber. Performance certified is for installation type A - Free inlet, Free outlet. Performance ratings do not include the effects of appurtenances (accessories-belt cover, pulley & belt).*

*The A-weighted sound ratings shown have been calculated per AMCA International Standard 301. Values shown are for outlet LwoA sound power levels for installation Type A: free inlet, free outlet.*

*Sound power frequency spectrum $L_{wrel}$ Page 54-55*

*Dimensions + Accessories Page 49-52*

# Performance Curve

## AXV 2800, 60 Hz

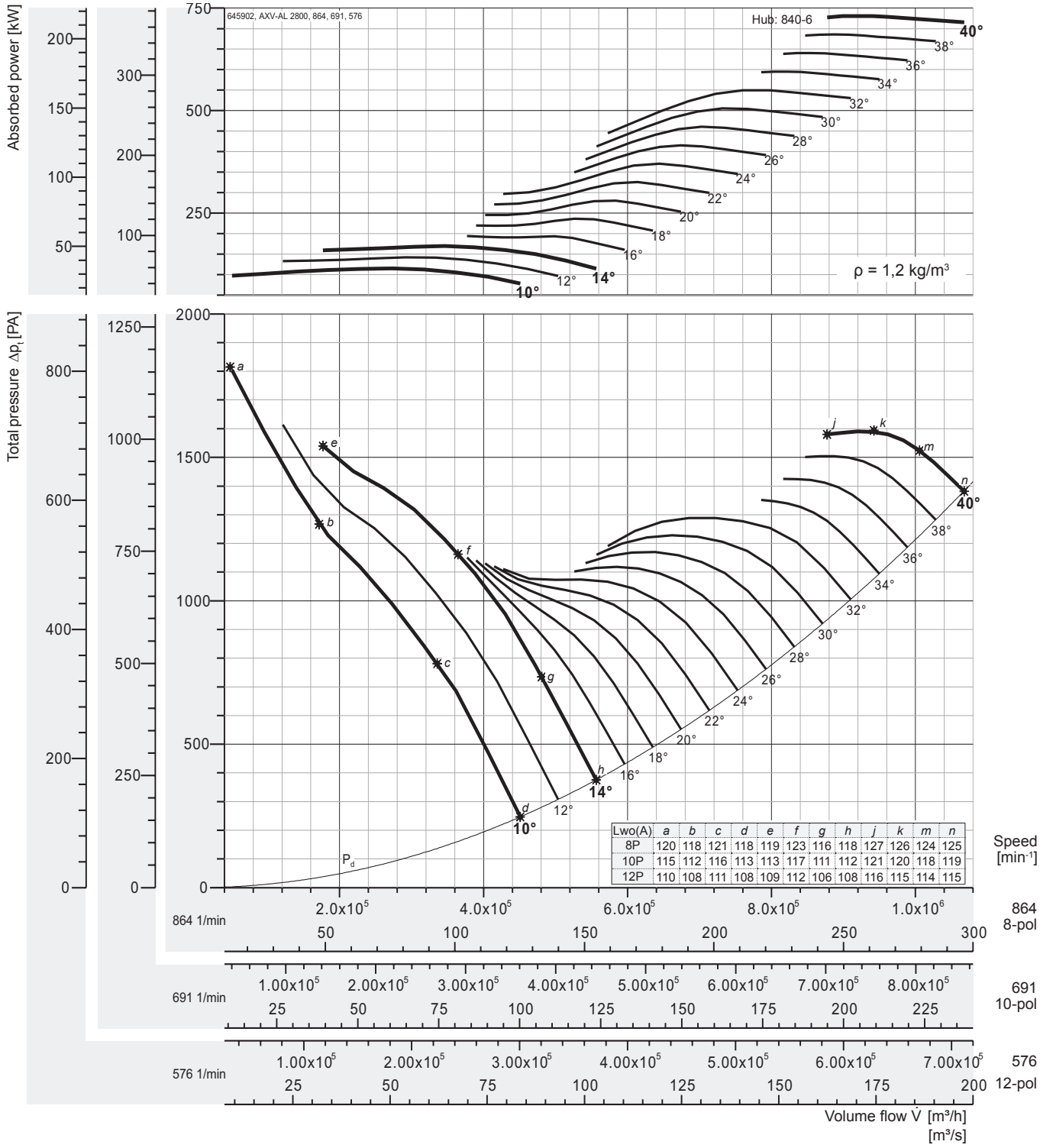


| Lwo(A) | a | b | c | d | e | f | g | h | j | k | m | n |
|---|---|---|---|---|---|---|---|---|---|---|---|---|
| 8P | 120 | 118 | 121 | 118 | 119 | 123 | 116 | 118 | 127 | 126 | 124 | 125 |
| 10P | 115 | 112 | 116 | 113 | 113 | 117 | 111 | 112 | 121 | 120 | 118 | 119 |
| 12P | 110 | 108 | 111 | 108 | 109 | 112 | 106 | 108 | 116 | 115 | 114 | 115 |

### Peak absorbed power [kW]

| n | Pitch angle [°] | | | | | | | | | | | | | | | | |
|---|---|---|---|---|---|---|---|---|---|---|---|---|---|---|---|---|---|
| [min⁻¹] | 8 | 10 | 12 | 14 | 16 | 18 | 20 | 22 | 24 | 26 | 28 | 30 | 32 | 34 | 36 | 38 | 40 |
| 576 | - | 34,1 | 42,0 | 50,1 | 57,6 | 70,0 | 83,0 | 96,4 | 109,8 | 123,1 | 136,4 | 149,6 | 162,8 | 176,4 | 189,7 | 203,1 | 216,5 |
| motor | | 37 | 45 | 55 | 75 | | 90 | 110 | | 132 | 160 | | 200 | | | 250 | |
| 691 | - | 58,8 | 72,6 | 86,5 | 99,4 | 120,8 | 143,3 | 166,4 | 189,5 | 212,5 | 235,4 | 258,3 | 281,1 | 304,5 | 327,6 | 350,7 | 373,8 |
| motor | | 75 | | 90 | 110 | 132 | 160 | 200 | | 250 | | 315 | | | 355 | | 450 |
| 864 | - | 115,0 | 141,9 | 169,2 | 194,3 | 236,1 | 280,2 | 325,4 | 370,5 | 415,4 | 460,3 | 504,9 | 549,5 | 595,3 | 640,4 | 685,6 | 730,8 |
| motor | | 132 | 160 | 200 | | 250 | 315 | 355 | 450 | | 500 | 560 | | 630 | 710 | | - |

*Fan test laboratory AMCA 210/99 Fig.15, Test Chamber. Performance certified is for installation type A - Free inlet, Free outlet. Performance ratings do not include the effects of appurtenances (accessories-belt cover, pulley & belt).*

*The A-weighted sound ratings shown have been calculated per AMCA International Standard 301. Values shown are for outlet LwoA sound power levels for installation Type A: free inlet, free outlet.*

*Sound power frequency spectrum $L_{wrel}$ Page 54-55*

*Dimensions + Accessories Page 49-52*

Direct Driven

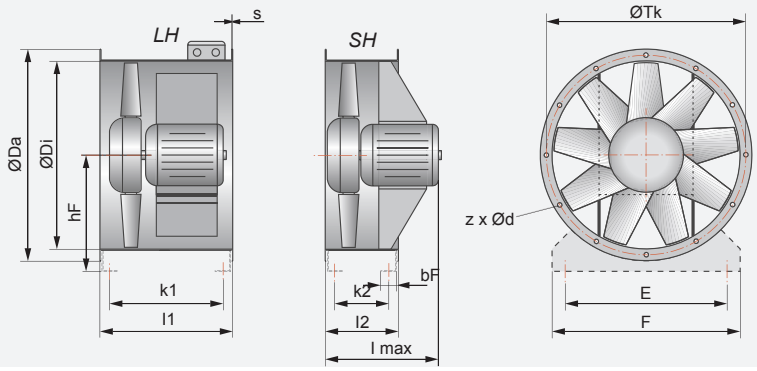


Belt Driven

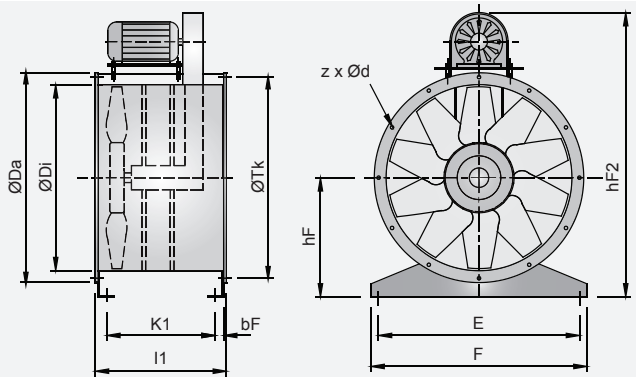


| Model size | Da [mm] | Di [mm] | hF [mm] | hF2 [mm] | z x d [mm] | Tk [mm] | E [mm] | F [mm] | bF [mm] |
|---|---|---|---|---|---|---|---|---|---|
| 355 | 438 | 359 | 225 | 750 | 8 x 12 | 405 | 305 | 355 | 60 |
| 400 | 484 | 401 | 250 | 810 | 12 x 12 | 448 | 350 | 400 | 60 |
| 450 | 534 | 450 | 280 | 860 | 12 x 12 | 497 | 400 | 450 | 60 |
| 500 | 584 | 504 | 315 | 1041 | 12 x 12 | 551 | 440 | 500 | 70 |
| 560 | 664 | 565 | 345 | 1094 | 16 x 14 | 629 | 500 | 560 | 70 |
| 630 | 734 | 634 | 400 | 1246 | 16 x 14 | 698 | 570 | 630 | 70 |
| 710 | 814 | 711 | 450 | 1454 | 16 x 14 | 775 | 650 | 710 | 70 |
| 800 | 904 | 797 | 500 | 1544 | 12* x 14 | 861 | 730 | 800 | 80 |
| 900 | 1004 | 894 | 580 | 1746 | 12* x 14 | 958 | 830 | 900 | 80 |
| 1000 | 1105 | 1003 | 630 | 1821 | 12* x 14 | 1067 | 930 | 990 | 80 |
| 1120 | 1245 | 1125 | 690 | 1990 | 16* x 18 | 1200 | 1050 | 1110 | 100 |
| 1250 | 1370 | 1250 | 750 | 2175 | 16* x 18 | 1337 | 1180 | 1240 | 100 |
| 1400 | 1525 | 1405 | 830 | 2362 | 16* x 18 | 1475 | 1330 | 1390 | 100 |
| 1600 | 1725 | 1605 | 930 | 2550 | 20* x 18 | 1675 | 1530 | 1590 | 100 |

| | LH/1 | | | | LH/2 | | | | SH | | | |
|---|---|---|---|---|---|---|---|---|---|---|---|---|
| Model size | s [mm] | k1 [mm] | l1 [mm] | motor max. | s [mm] | k1 [mm] | l1 [mm] | motor max. | s [mm] | k2 [mm] | l2 [mm] | lmax [mm] |
| 355 | 2 | 356 | 420 | 80 | | | | | 2 | 161 | 225 | 350 |
| 400 | 2 | 371 | 435 | 90 | | | | | 2 | 161 | 225 | 400 |
| 450 | 2 | 371 | 435 | 112 | | | | | 2 | 161 | 225 | 500 |
| 500 | 2 | 396 | 470 | 112 | | | | | 2 | 151 | 225 | 600 |
| 560 | 2 | 396 | 470 | 112 | 3 | 624 | 700 | 160 | 3 | 224 | 300 | 750 |
| 630 | 2 | 396 | 470 | 112 | 3 | 624 | 700 | 160 | 3 | 224 | 300 | 750 |
| 710 | 2,5 | 395 | 470 | 112 | 2,5 | 490 | 565 | 132 | 2,5 | 225 | 300 | 600 |
| 800 | 2,5 | 385 | 470 | 112 | 3 | 614 | 700 | 160 | 3 | 214 | 300 | 750 |
| 900 | 3 | 479 | 565 | 132 | 4 | 612 | 700 | 160 | 4 | 212 | 300 | 750 |
| 1000 | 3 | 479 | 565 | 132 | 4 | 692 | 780 | 180 | 4 | 262 | 350 | 800 |
| 1120 | 4 | 592 | 700 | 160 | 4 | 892 | 1000 | 200 | 4 | 242 | 350 | 800 |
| 1250 | 4 | 592 | 700 | 160 | 4 | 892 | 1000 | 225 | 4 | 242 | 350 | 800 |
| 1400 | | | | | 4 | 892 | 1000 | 225 | 4 | 242 | 350 | 800 |
| 1600 | | | | | 4 | 892 | 1000 | 280 | 4 | 242 | 350 | 800 |


SH


PM

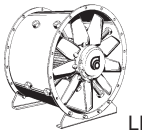
LH

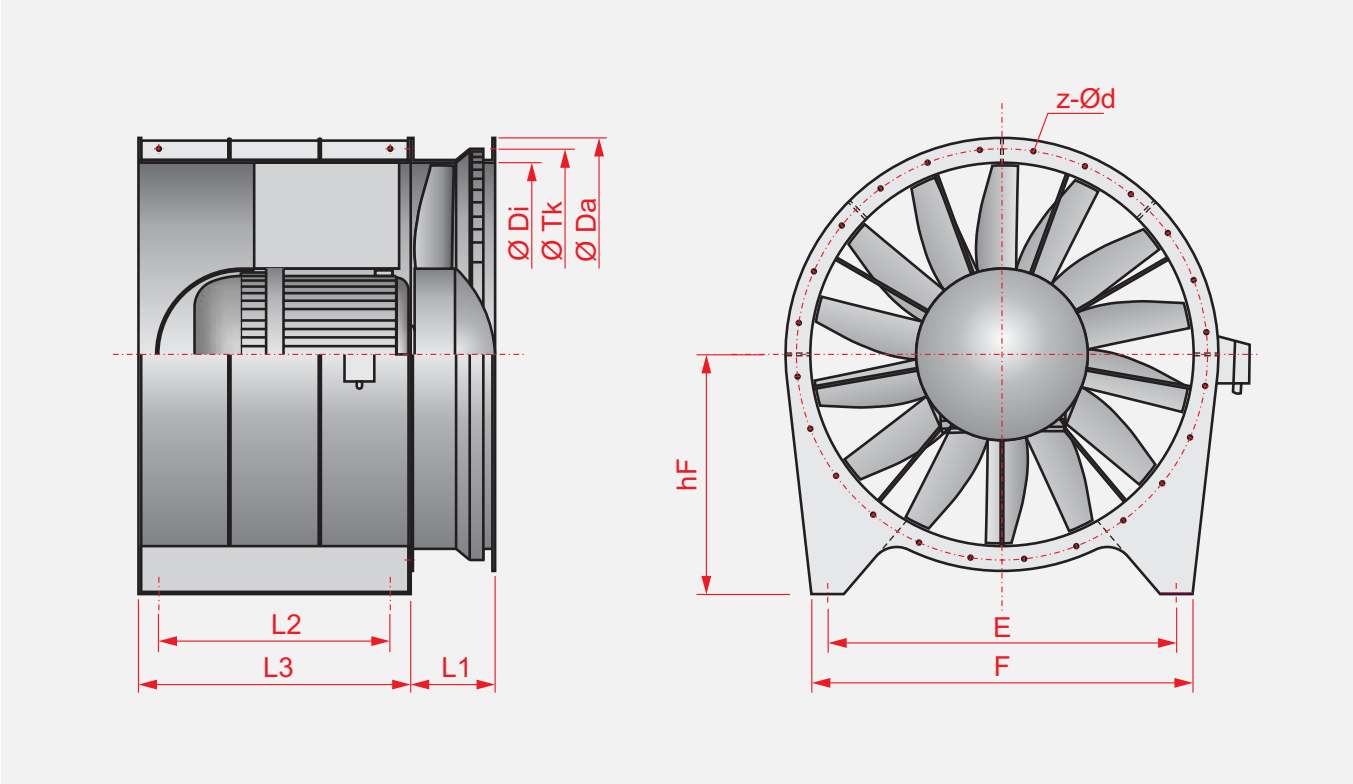


| Baugröße<br>size | Da<br>[mm] | Di<br>[mm] | hF<br>[mm] | z x d<br>[mm] | Tk<br>[mm] | E<br>[mm] | F<br>[mm] | L1<br>[mm] | L2<br>[mm] | L3<br>[mm] |
|---|---|---|---|---|---|---|---|---|---|---|
| 1800 | 2010 | 1805 | 1120 | 24x18 | 1920 | 1660 | 1800 | 400 | 1200 | 1400 |
| 2000 | 2210 | 2005 | 1165 | 32x18 | 2120 | 1820 | 2000 | 445 | 1300 | 1500 |
| 2200 | 2440 | 2205 | 1265 | 32x18 | 2340 | 2020 | 2200 | 490 | 1400 | 1650 |
| 2400 | 2630 | 2405 | 1370 | 32x18 | 2530 | 2220 | 2400 | 550 | 1500 | 1800 |
| 2500 | 2740 | 2505 | 1420 | 36x24 | 2640 | 2320 | 2500 | 555 | 1530 | 1820 |
| 2600 | 2840 | 2605 | 1470 | 36x24 | 2740 | 2380 | 2600 | 590 | 1580 | 1850 |
| 2800 | 3150 | 2805 | 1570 | 36x24 | 3000 | 2500 | 2800 | 1300 | 1680 | 1900 |

### Square Wall Plate

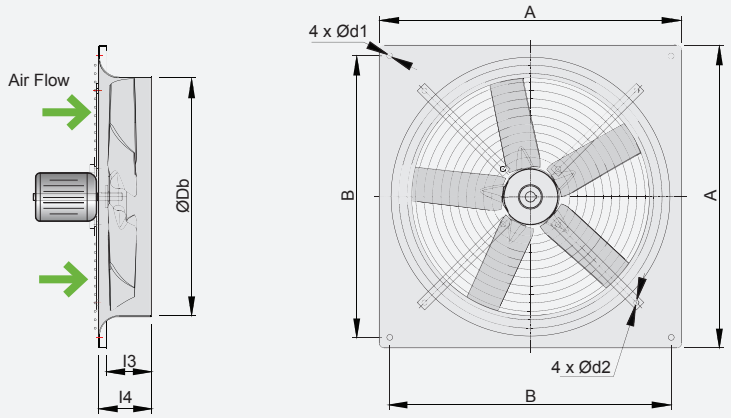


| Baugröße<br>size | A<br>[mm] | B<br>[mm] | Db<br>[mm] | d1<br>[mm] | d2<br>[mm] | l3<br>[mm] | l4<br>[mm] |
|---|---|---|---|---|---|---|---|
| 355 | 485 | 435 | 360 | 9 | 8,5 | 75 | 85 |
| 400 | 540 | 490 | 410 | 9 | 8,5 | 88 | 100 |
| 450 | 575 | 535 | 460 | 11 | 8,5 | 88 | 100 |
| 500 | 655 | 615 | 510 | 11 | 8,5 | 106 | 120 |
| 560 | 725 | 675 | 560 | 11 | 8,5 | 121 | 135 |
| 630 | 805 | 750 | 634 | 11 | 8,5 | 135 | 150 |
| 710 | 850 | 810 | 710 | 14,5 | 10,5 | 150 | 170 |
| 800 | 970 | 910 | 795 | 14,5 | 10,5 | 194 | 210 |
| 900 | 1070 | 1010 | 899 | 14,5 | 10,5 | 200 | 220 |
| 1000 | 1170 | 1110 | 999 | 14,5 | 10,5 | 200 | 220 |

### Bifurcated Axial Fan

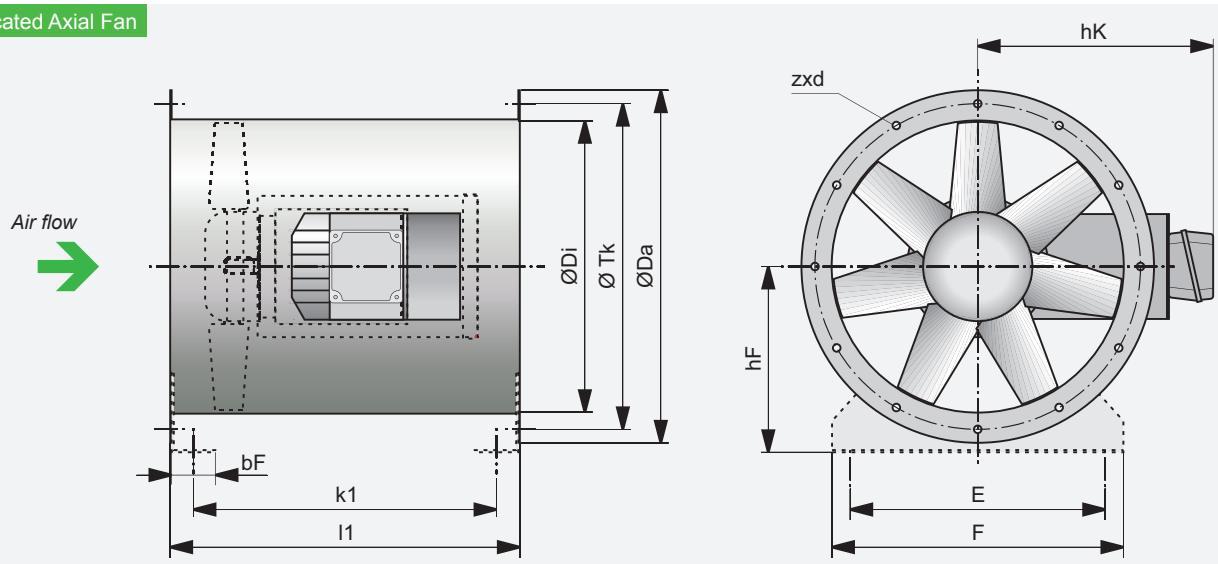


| Größe | ØDa<br>[mm] | ØDi<br>[mm] | ØTk<br>[mm] | E<br>[mm] | F<br>[mm] | zxd | hF<br>[mm] | bF<br>[mm] | k1<br>[mm] | l1<br>[mm] | hK<br>[mm] | Motor max. | Art.Nr.: |
|---|---|---|---|---|---|---|---|---|---|---|---|---|---|
| AXV-BIF 400S | 484 | 400 | 448 | 350 | 400 | 12x12 | 250 | 60 | 415 | 480 | 324 | 90(2.2 kW) | 303719 |
| AXV-BIF 450 | 534 | 450 | 497 | 400 | 450 | 12x12 | 280 | 60 | 415 | 480 | 331 | 90(2.2 kW) | 303720 |
| AXV-BIF 560 | 664 | 560 | 629 | 500 | 560 | 16x14 | 345 | 70 | 624 | 700 | 410 | 132(7.5 kW) | 303721 |
| AXV-BIF 630 | 734 | 630 | 698 | 570 | 630 | 16x14 | 400 | 70 | 624 | 700 | 435 | 100(2.2 kW) | 303722 |
| AXV-BIF 710 | 814 | 711 | 775 | 650 | 710 | 16x14 | 450 | 70 | 624 | 700 | 476 | | 303723 |
| AXV-BIF 800 | 904 | 800 | 861 | 730 | 800 | 12*x14 | 500 | 80 | 614 | 700 | 504 | 112(4.0 kW) | 303716 |
| AXV-BIF 900 | 1004 | 894 | 958 | 830 | 900 | 12*x14 | 580 | 80 | 612 | 700 | 572 | 132(7.5 kW) | 303717 |
| AXV-BIF1000 | 1105 | 1000 | 1067 | 930 | 990 | 12*x14 | 630 | 80 | 692 | 780 | | 160(15.0kW) | 303724 |

- *We reserve the right to alter measurements without notice in case of technical improvements.*
- *The square wall plate and Bifurcated Axial Fan are not licensed by AMCA International.*

## ED

Bellmouth inlet

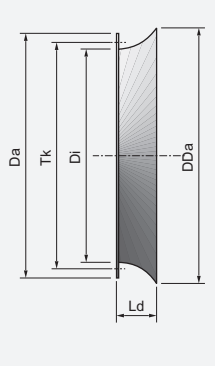


## LRK

Air-operated damper

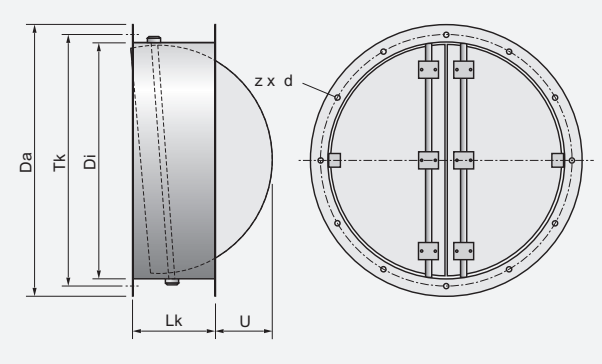


## GL-AXV

Matching flange

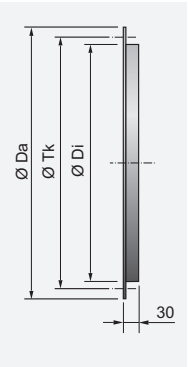


## EV-AXV

Flexible connector compl.

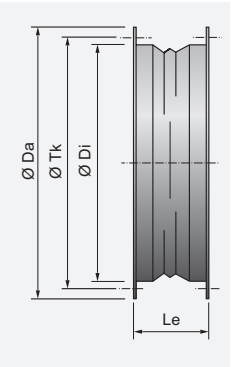


## GV-AXV

Up-stream guide vane

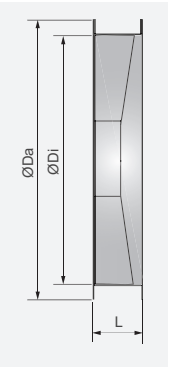


| Model size | Da [mm] | Di [mm] | Tk [mm] | z x d [mm] | DDa [mm] | L [mm] | Ld [mm] | Lk [mm] | Le [mm] | U [mm] |
|---|---|---|---|---|---|---|---|---|---|---|
| 355 | 438 | 359 | 405 | 8 x 12 | 435 | 152 | 165 | 250 | 130 | - |
| 400 | 484 | 401 | 448 | 12 x 12 | 507 | 152 | 165 | 250 | 130 | - |
| 450 | 534 | 450 | 497 | 12 x 12 | 555 | 152 | 165 | 250 | 130 | 15 |
| 500 | 584 | 504 | 551 | 12 x 12 | 617 | 152 | 165 | 250 | 130 | 45 |
| 560 | 664 | 565 | 629 | 16 x 14 | 667 | 152 | 165 | 250 | 130 | 80 |
| 630 | 734 | 634 | 698 | 16 x 14 | 757 | 152 | 165 | 250 | 130 | 120 |
| 710 | 814 | 711 | 775 | 16 x 14 | 816 | 190 | 170 | 350 | 130 | 60 |
| 800 | 904 | 797 | 861 | 12* x 14 | 915 | 190 | 250 | 350 | 130 | 110 |
| 900 | 1004 | 894 | 958 | 12* x 14 | 1015 | 200 | 250 | 350 | 130 | 170 |
| 1000 | 1105 | 1003 | 1067 | 12* x 14 | 1115 | 200 | 250 | 350 | 130 | 225 |
| 1120 | 1245 | 1125 | 1200 | 16* x 18 | 1243 | 240 | 250 | 350 | 130 | 255 |
| 1250 | 1370 | 1250 | 1337 | 16* x 18 | 1364 | 240 | 250 | 400 | 170 | 375 |
| 1400 | 1525 | 1405 | 1475 | 16* x 18 | 1523 | 260 | 250 | 400 | 170 | 450 |
| 1600 | 1725 | 1605 | 1675 | 20* x 18 | 1723 | 260 | 250 | 400 | 170 | 550 |

## Sound power levels

This term refers to the power which a source radiates as sound. Sound power levels are expressed in decibels with a reference level of 1 picoWatt. The sound power level of a source remains the same regardless of its environment and the distance to the listener.

If the sound power frequency spectrum is needed, for as follows: example, the design of sound attenuators, the A- rated sound power levels at particular octave band frequency $L_{WA}$ can be calculated by subtracting the relative sound $L_{wrel}$.

$$L_{WA} = L_{wi} + L_{wrel}$$

## Sound pressure level

These are pressure fluctuations generated by a source expressed in decibels with a reference level of 20 µPa. The sound pressure level varies with the distance of a sound source to the listener and its environment.

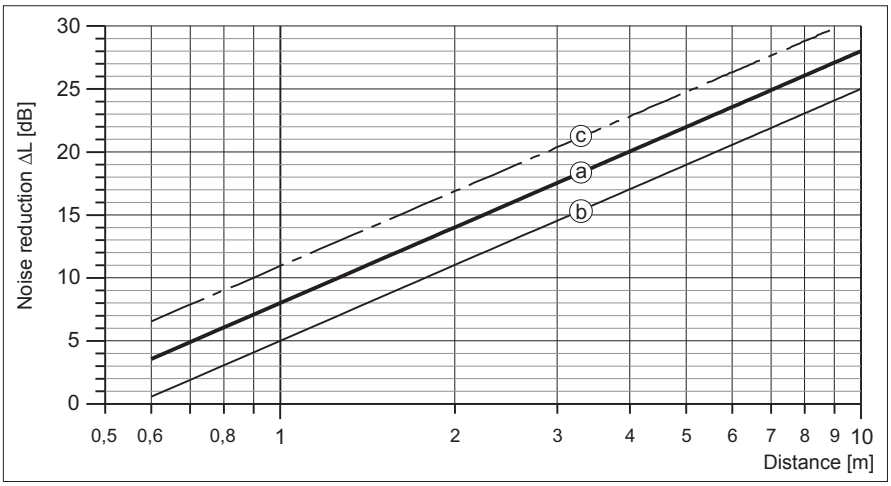


Sound level reduction half sphere

a: without reflexion
b: with reflexion
c: full sphere without reflexion

## Frequencies

Sound is split into different frequencies. Frequencies of human hearing range from about 20 cycles per second (Hz) to 20.000 cycles per second (Hz). For practical purposes, WOLTER publishes noise data in eight octave bands with the centre frequencies of (63,) 125, 250, 500, 1000, 2000, 4000 and 8000 Hz.

Each fan has its own specific correction factor which is to be deducted from sound power according to the octave band and is shown on the buttom line of each perfomance curve.

## A-weighted sound pressure level in dB (A)

The human ear is more sensitive to sound in some frequencies than in others. The A-weighting is an attempt to reflect this natural perception of sound. The A-weighting is a set of figures which are applied to the sound pressure levels. The levels in each of the octave bands are added logarithmically to give a single figure. The A-weighting over the octave band is as follows:

Table 1)

| Frequency [Hz] | 63 | 125 | 250 | 500 | 1000 | 2000 | 4000 | 8000 |
|---|---|---|---|---|---|---|---|---|
| A-weighting [dB] | -26,2 | -16,1 | -8,6 | -3,2 | 0 | +1,2 | +1,0 | -1,1 |

Table 2)
Addition of sound levels

| Difference between two sound levels [dB] | Add to the higher level [dB] |
|---|---|
| 0 - 1 | 3 |
| 2 - 3 | 2 |
| 4 - 9 | 1 |
| ≥10 | 0 |

$$L_{\Sigma} = 10 \cdot \lg\left(10^{0,1 \cdot L_1} + 10^{0,1 \cdot L_2} + \ldots + 10^{0,1 \cdot L_n}\right)$$

where:
$L_1$ = sound level of a source 1
$L_{\Sigma}$ = resulting summation sound level

## Summation of several congeneric sound levels

$$L_{\Sigma} = L_1 + 10 \cdot \lg(z)$$

where:
z = number of sources
$L_1$ = sound level of a single source
$L_{\Sigma}$ = resulting summation sound level

**Relative Sound Power Frequency Spectrum ($L_{wrel}$) [dB]**

| Fan Model | Poles | 63 | 125 | 250 | 500 | 1000 | 2000 | 4000 | 8000 |
|---|---|---|---|---|---|---|---|---|---|
| *Size* | [-] | [Hz] | [Hz] | [Hz] | [Hz] | [Hz] | [Hz] | [Hz] | [Hz] |
| 355 | 2 | -14 | -10 | -2 | -10 | -19 | -26 | -28 | -33 |
| | 4 | -10 | -1 | -10 | -18 | -26 | -28 | -33 | -37 |
| | 6 | -2 | -5 | -14 | -22 | -26 | -30 | -35 | -39 |
| 400 | 2 | -11 | -8 | -2 | -12 | -15 | -17 | -21 | -26 |
| | 4 | -8 | -2 | -12 | -14 | -17 | -21 | -25 | -34 |
| | 6 | -2 | -7 | -13 | -15 | -19 | -23 | -30 | -39 |
| 450 | 2 | -8 | -5 | -5 | -13 | -18 | -22 | -24 | -26 |
| | 4 | -4 | -4 | -12 | -17 | -21 | -24 | -26 | -27 |
| | 6 | -2 | -7 | -14 | -18 | -22 | -23 | -25 | -27 |
| 500 | 2 | -8 | -5 | -6 | -10 | -15 | -18 | -21 | -26 |
| | 4 | -4 | -5 | -9 | -14 | -17 | -21 | -25 | -26 |
| | 6 | -3 | -6 | -11 | -14 | -18 | -22 | -25 | -24 |
| 560 | 2 | -11 | -8 | -4 | -7 | -15 | -18 | -22 | -26 |
| | 4 | -7 | -4 | -6 | -14 | -18 | -21 | -26 | -31 |
| | 6 | -4 | -4 | -11 | -16 | -19 | -23 | -28 | -33 |
| 630 | 2 | -9 | -6 | -8 | -5 | -13 | -15 | -19 | -22 |
| | 4 | -6 | -8 | -4 | -12 | -15 | -18 | -22 | -27 |
| | 6 | -7 | -4 | -7 | -13 | -15 | -19 | -23 | -29 |
| 710 | 4 | -7 | -4 | -8 | -12 | -14 | -18 | -22 | -28 |
| | 6 | -4 | -5 | -11 | -12 | -16 | -20 | -25 | -31 |
| | 8 | -3 | -7 | -11 | -13 | -17 | -21 | -27 | -33 |
| 800 | 4 | -6 | -6 | -6 | -11 | -13 | -17 | -20 | -26 |
| | 6 | -5 | -5 | -9 | -11 | -15 | -18 | -23 | -30 |
| | 8 | -4 | -5 | -10 | -12 | -16 | -19 | -25 | -32 |
| 900 | 4 | -7 | -7 | -6 | -10 | -11 | -14 | -18 | -25 |
| | 6 | -7 | -5 | -8 | -10 | -12 | -16 | -21 | -29 |
| | 8 | -6 | -5 | -9 | -10 | -13 | -17 | -24 | -32 |
| 1000 | 4 | -7 | -5 | -7 | -12 | -12 | -13 | -17 | -22 |
| | 6 | -5 | -5 | -10 | -11 | -12 | -15 | -19 | -26 |
| | 8 | -4 | -6 | -11 | -10 | -12 | -16 | -21 | -30 |
| 1120 | 4 | -7 | -6 | -9 | -9 | -12 | -15 | -19 | -24 |
| | 6 | -4 | -7 | -8 | -10 | -14 | -17 | -21 | -28 |
| | 8 | -4 | -7 | -8 | -11 | -14 | -17 | -22 | -31 |
| 1250 | 4 | -7 | -5 | -9 | -11 | -12 | -14 | -18 | -23 |
| | 6 | -5 | -6 | -10 | -10 | -12 | -16 | -19 | -27 |
| | 8 | -4 | -8 | -10 | -10 | -13 | -17 | -22 | -31 |
| 1400 | 6 | -9 | -8 | -10 | -9 | -10 | -12 | -15 | -20 |
| | 8 | -7 | -9 | -9 | -9 | -10 | -13 | -16 | -23 |
| | 10 | -7 | -9 | -9 | -9 | -10 | -13 | -18 | -25 |
| 1600 | 6 | -9 | -7 | -8 | -9 | -11 | -15 | -19 | -24 |
| | 8 | -7 | -7 | -8 | -9 | -12 | -17 | -21 | -25 |
| | 10 | -7 | -7 | -8 | -9 | -13 | -18 | -22 | -26 |

• *Sound power frequency spectrum calculated with this $L_{wrel}$ are not licensed by AMCA.*

**Relative Sound Power Frequency Spectrum ($L_{wrel}$) [dB]**

| Fan Model | Poles | 63 | 125 | 250 | 500 | 1000 | 2000 | 4000 | 8000 |
|---|---|---|---|---|---|---|---|---|---|
| *Size* | [-] | [Hz] | [Hz] | [Hz] | [Hz] | [Hz] | [Hz] | [Hz] | [Hz] |
| 1800 | 6 | -9 | -7 | -10 | -10 | -10 | -12 | -16 | -21 |
| | 8 | -7 | -8 | -9 | -9 | -10 | -13 | -17 | -23 |
| | 10 | -7 | -9 | -9 | -9 | -10 | -13 | -18 | -25 |
| 2000 | 6 | -8 | -7 | -10 | -10 | -11 | -13 | -16 | -21 |
| | 8 | -6 | -8 | -10 | -9 | -10 | -13 | -17 | -24 |
| | 10 | -7 | -9 | -9 | -9 | -10 | -14 | -18 | -25 |
| 2200 | 8 | -6 | -8 | -10 | -10 | -10 | -13 | -17 | -24 |
| | 10 | -6 | -9 | -9 | -9 | -11 | -14 | -18 | -26 |
| | 12 | -7 | -9 | -9 | -9 | -11 | -15 | -20 | -27 |
| 2400 | 8 | -6 | -8 | -10 | -10 | -11 | -13 | -17 | -24 |
| | 10 | -6 | -9 | -9 | -9 | -11 | -14 | -19 | -26 |
| | 12 | -7 | -9 | -9 | -9 | -11 | -15 | -20 | -27 |
| 2500 | 8 | -6 | -8 | -10 | -10 | -11 | -14 | -17 | -24 |
| | 10 | -6 | -9 | -9 | -9 | -11 | -14 | -19 | -26 |
| | 12 | -7 | -9 | -9 | -9 | -11 | -15 | -20 | -27 |
| 2600 | 8 | -6 | -8 | -10 | -10 | -11 | -14 | -17 | -24 |
| | 10 | -6 | -9 | -9 | -9 | -11 | -14 | -19 | -26 |
| | 12 | -6 | -9 | -9 | -9 | -11 | -15 | -20 | -27 |
| 2800 | 8 | -5 | -9 | -10 | -10 | -11 | -14 | -17 | -24 |
| | 10 | -6 | -9 | -9 | -9 | -11 | -14 | -19 | -26 |
| | 12 | -6 | -9 | -9 | -9 | -11 | -15 | -20 | -28 |

• *Sound power frequency spectrum calculated with this $L_{wrel}$ are not licensed by AMCA.*

# Tubular Sound Attenuator for AXV



**SPA 450 -1D**

- Length
- Size
  355...1600
- Sound attenuator
  SA - without pod
  SPA - with pod

Attenuators made of galvanised sheet steel. Connecting flanges correspond to those of the AXV axial fan series.

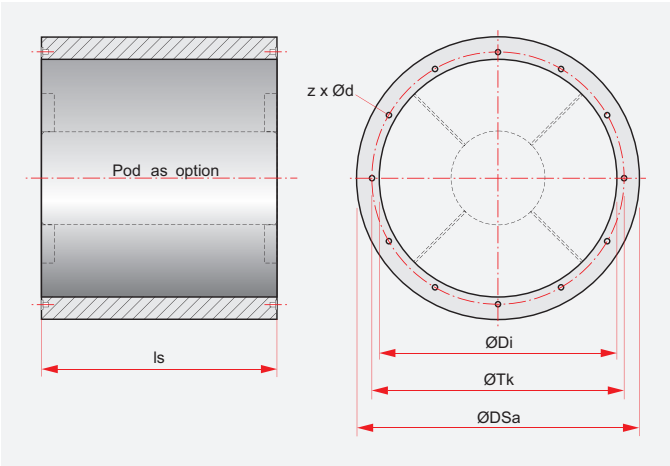


| Size | DSa | Tk | Di | ls | | | | | | Length | Type | Pitch angle | Octave band mid-frequency [Hz] | | | | | | | |
|---|---|---|---|---|---|---|---|---|---|---|---|---|---|---|---|---|---|---|---|---|
| | | | | x 1D | x 2D | SA-1D | SPA-1D | SA-2D | SPA-2D | | | | | | | | | | | |
| | [mm] | [mm] | [mm] | [mm] | [mm] | [kg] | [kg] | [kg] | [kg] | | | setting | 63 | 125 | 250 | 500 | 1k | 2k | 4k | 8k |
| | | | | | | | | | | 1D | SA-1D | all | 2 | 4 | 6 | 10 | 14 | 10 | 7 | 8 |
| 355 | 459 | 405 | 359 | 355 | 710 | 12 | 18 | 16 | 23 | | SPA-1D | low | 4 | 6 | 8 | 13 | 20 | 21 | 18 | 16 |
| 400 | 601 | 448 | 401 | 400 | 800 | 14 | 23 | 19 | 29 | | | med | 4 | 6 | 8 | 12 | 18 | 19 | 18 | 14 |
| 450 | 650 | 497 | 450 | 450 | 900 | 18 | 29 | 23 | 36 | | | high | 4 | 6 | 8 | 11 | 13 | 16 | 16 | 11 |
| | | | | | | | | | | 2D | SA-2D | low | 4 | 7 | 12 | 18 | 22 | 17 | 12 | 13 |
| | | | | | | | | | | | | med | 4 | 7 | 11 | 17 | 21 | 17 | 13 | 12 |
| | | | | | | | | | | | | high | 4 | 7 | 10 | 15 | 19 | 16 | 13 | 10 |
| | | | | | | | | | | | SPA-2D | low | 7 | 10 | 15 | 24 | 32 | 35 | 30 | 28 |
| | | | | | | | | | | | | med | 7 | 10 | 15 | 21 | 26 | 26 | 24 | 22 |
| | | | | | | | | | | | | high | 7 | 10 | 15 | 16 | 15 | 17 | 13 | 13 |
| 500 | 704 | 551 | 504 | 500 | 1000 | 22 | 36 | 28 | 43 | 1D | SA-1D | all | 3 | 4 | 8 | 14 | 14 | 9 | 8 | 7 |
| 560 | 765 | 629 | 565 | 560 | 1120 | 25 | 41 | 31 | 50 | | SPA-1D | low | 4 | 6 | 9 | 17 | 26 | 21 | 18 | 12 |
| 630 | 834 | 698 | 634 | 630 | 1260 | 29 | 47 | 37 | 59 | | | med | 4 | 6 | 9 | 17 | 23 | 20 | 18 | 11 |
| 710 | 911 | 775 | 711 | 710 | 1420 | 37 | 60 | 47 | 75 | | | high | 4 | 6 | 9 | 16 | 17 | 16 | 14 | 11 |
| 800 | 997 | 861 | 797 | 800 | 1600 | 69 | 108 | 90 | 141 | 2D | SA-2D | low | 6 | 8 | 14 | 23 | 24 | 15 | 13 | 10 |
| | | | | | | | | | | | | med | 6 | 8 | 13 | 22 | 22 | 14 | 13 | 9 |
| | | | | | | | | | | | | high | 6 | 8 | 12 | 20 | 18 | 13 | 11 | 9 |
| | | | | | | | | | | | SPA-2D | low | 8 | 11 | 16 | 30 | 39 | 35 | 32 | 22 |
| | | | | | | | | | | | | med | 8 | 11 | 16 | 27 | 32 | 32 | 29 | 19 |
| | | | | | | | | | | | | high | 8 | 11 | 16 | 24 | 23 | 23 | 24 | 17 |
| 900 | 1094 | 958 | 894 | 900 | 1800 | 86 | 135 | 112 | 176 | 1D | SA-1D | all | 3 | 4 | 9 | 14 | 12 | 8 | 7 | 7 |
| 1000 | 1203 | 1067 | 1003 | 1000 | 2000 | 125 | 190 | 156 | 234 | | SPA-1D | low | 4 | 6 | 11 | 22 | 21 | 16 | 14 | 11 |
| 1120 | 1325 | 1200 | 1125 | 1120 | 2240 | 132 | 210 | 169 | 260 | | | med. | 4 | 6 | 11 | 20 | 19 | 15 | 13 | 11 |
| 1250 | 1450 | 1337 | 1250 | 1250 | 2500 | 146 | 234 | 185 | 294 | | | high | 4 | 6 | 11 | 17 | 17 | 14 | 12 | 11 |
| | | | | | | | | | | 2D | SA-2D | low | 6 | 8 | 14 | 22 | 20 | 13 | 12 | 10 |
| | | | | | | | | | | | | med. | 6 | 8 | 13 | 21 | 18 | 12 | 11 | 10 |
| | | | | | | | | | | | | high | 6 | 8 | 12 | 19 | 15 | 11 | 10 | 9 |
| | | | | | | | | | | | SPA-2D | low | 8 | 11 | 19 | 30 | 32 | 30 | 24 | 17 |
| | | | | | | | | | | | | med. | 8 | 11 | 19 | 26 | 27 | 26 | 22 | 17 |
| | | | | | | | | | | | | high | 8 | 11 | 19 | 21 | 20 | 22 | 20 | 16 |
| 1400 | 1605 | 1475 | 1405 | 1400 | 2800 | 197 | 316 | 250 | 397 | 1D | SA-1D | all | 4 | 5 | 10 | 14 | 11 | 7 | 6 | 6 |
| 1600 | 1805 | 1675 | 1605 | 1600 | 3200 | 275 | 540 | 348 | 682 | | SPA-1D | low | 5 | 7 | 12 | 21 | 20 | 14 | 12 | 9 |
| | | | | | | | | | | | | med. | 5 | 7 | 12 | 19 | 18 | 13 | 11 | 9 |
| | | | | | | | | | | | | high | 5 | 7 | 12 | 15 | 16 | 12 | 10 | 8 |
| | | | | | | | | | | 2D | SA-2D | low | 8 | 9 | 15 | 20 | 19 | 12 | 11 | 9 |
| | | | | | | | | | | | | med. | 8 | 9 | 14 | 20 | 17 | 11 | 10 | 9 |
| | | | | | | | | | | | | high | 8 | 9 | 13 | 19 | 14 | 10 | 9 | 9 |
| | | | | | | | | | | | SPA-2D | low | 10 | 14 | 22 | 28 | 31 | 29 | 18 | 15 |
| | | | | | | | | | | | | med. | 10 | 14 | 22 | 25 | 27 | 25 | 16 | 15 |
| | | | | | | | | | | | | high | 10 | 14 | 22 | 21 | 21 | 21 | 15 | 14 |

• Low, Medium and High Pitch Angle setting correspond to 10º, 22º and 35º pitch angle approximately: for other pitch angles use interpolation.

• Sizes 1800 - 2800 TBA.

## Pressure Loss SPA - 1D

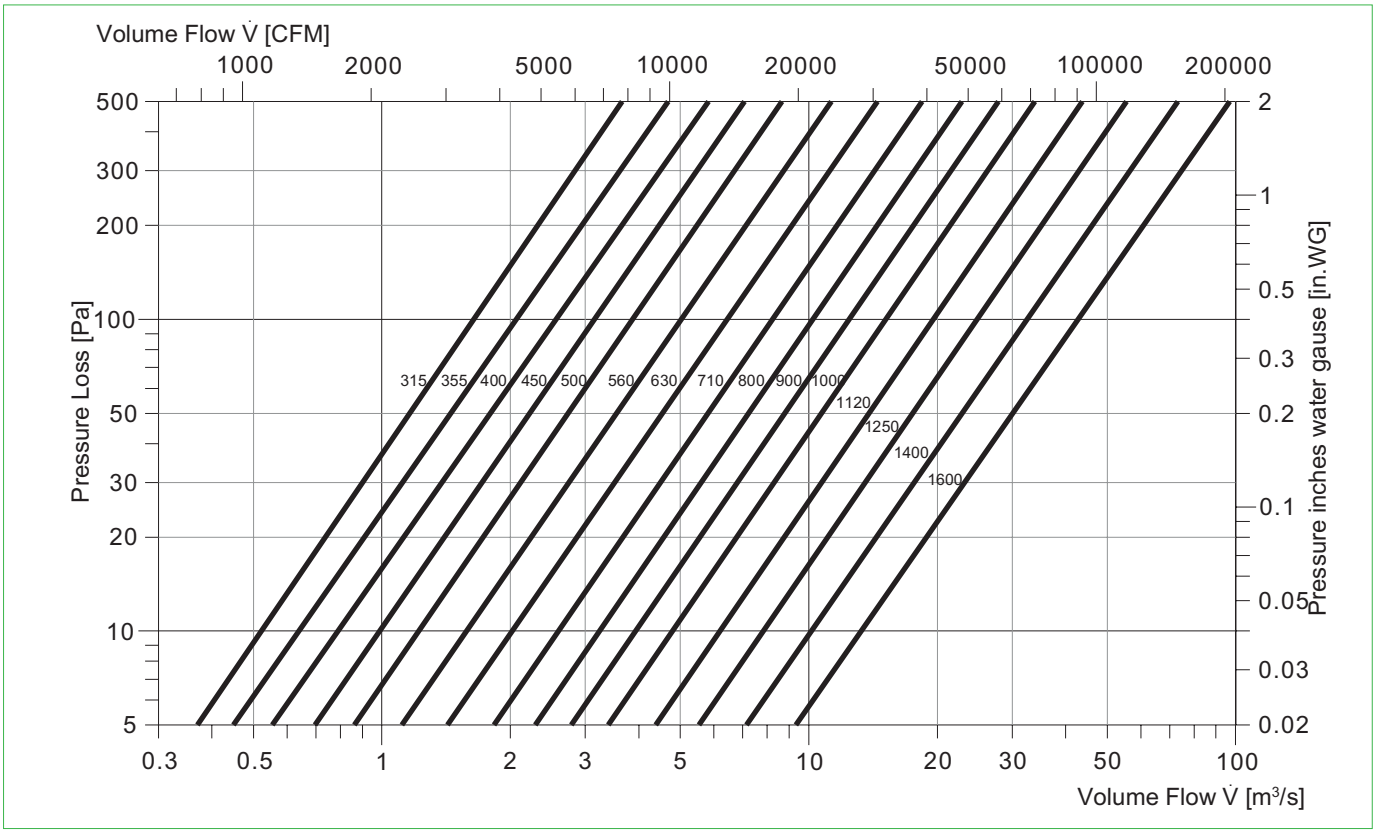


## Pressure Loss SPA - 2D

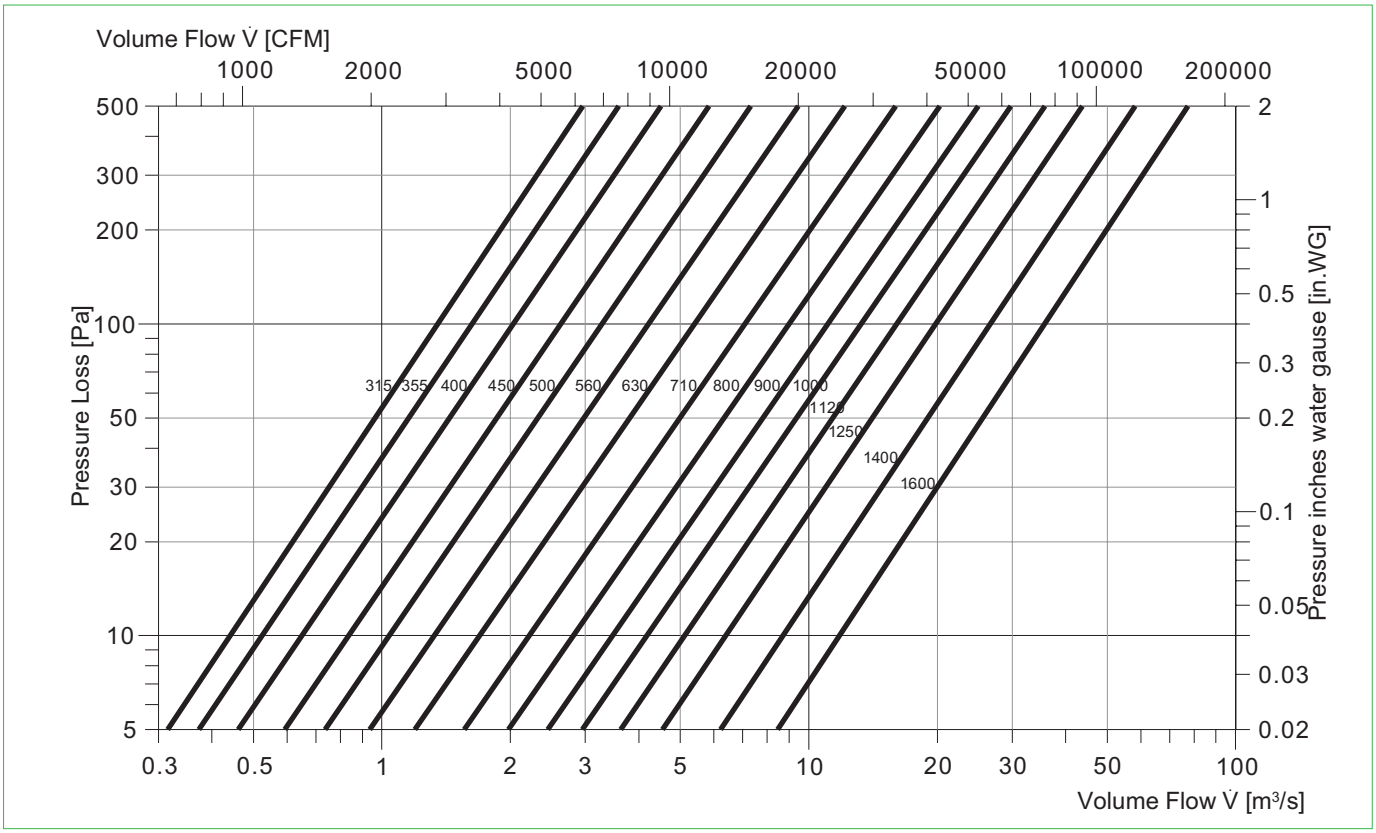


• Performance of sound attenuator are not licensed by AMCA International.

# Wolter Sales Network

## Inland

Ing. Günther Rößler
D-07619 Schkölen
Tel. (+49) 03 66 94 / 22 359
Fax (+49) 03 66 94 / 22 357
guenther.roessler@wolterfans.de

Mattias Industrievertretungen
D-16259 Bad Freienwalde
Tel. (+49)03344/301994
Fax (+49)03344/301996
thomas.mattias@wolterfans.de

Industrieservice Drexler
D-49080 Osnabrück
Tel. (+49) 0 541 / 20 04 88 3
Fax (+49) 0 541 / 20 04 88 4
wolfgang.drexler@wolterfans.de

Burkhardt Projekt GmbH
D-67583 Guntersblum
Tel. (+49) 0 62 49 / 82 01
Fax (+49) 0 62 49 / 88 58
info@bp-wolter.de

Friedrich Glock
D-97980 Bad Mergentheim
Tel. (+49) 0 79 31 / 37 44
Fax (+49 )0 79 31 / 28 58
friedrich.glock@wolterfans.de

## Europe

**Danmark:**

Air-Con Danmark A/S
DK-8400 Ebeltoft
Tel. (+45)086/345111
Fax (+45)086/345810
jbj@air-con.dk

**Hungary:**

Air-Technik Légtechnikal Kft.
HU-2040 Budaörs
Tel. (+36)023/428533
Fax (+36)023/428544
bp.air-technik@troges.hu

**Ireland:**

Finheat Ltd.
IE-Dublin 12, Walkinstown
Tel. (+353)01/4564066
Fax (+353)01/4564071
sales@finheat.com

**Lithuania:**

JSC Saldos Prekyba
LT-78109 Siauliai
Tel. (+37)041/540212
Fax (+37)041/596176
prekyba@salda.lt

**Netherlands:**

AirFan B. V.
NL-7442 CX Nijverdal
Tel. (+31)054/8366366
Fax (+31)054/8365320
ventilatie@airfan.nl

Rucon B. V. Ventilatoren
NL-3840 AG Harderwijk
Tel. (+31)034/1411670
Fax (+31)034/1411690
verkoop@rucon.nl

**Österreich:**

Wolter Werksvertretung Österreich
A-4040 Linz
Tel. (+43) 07 32 / 75 77 07
Fax (+43)07 32 / 75 77 07 75
wolter.linz@aon.at

**Poland:**

Wentoprodukt
44-100 Gliwice
Tel. (+48)32 331-34-24
Fax (+48)32 729-76-53
biuro@wentoprodukt.pl

**Portugal:**

Safe Park Ventilação Industrial Lda.
P-2675-240 Odivelas
Tel. (+351) 21 93 / 75 265
Fax (+351) 21 93 / 86 061
safepark@netcabo.pt

**Russia:**

Euroclimat-Prof
RU-107082 Moskau
Tel. (+7) 4 95 / 97 57 530
Fax (+7) 4 95 / 97 57 530
gso@euroclimat.ru

**Schweiz:**

Anson AG Zürich
CH-8055 Zürich
Tel. (+41) 0 44 / 46 11 111
Fax (+41) 0 44 / 46 13 111
info@anson.ch

Ventra Technik AG
CH-8599 Salmsach
Tel. (+41) 0 71 / 46 11 447
Fax (+41) 0 71 / 46 11 448
ventra@bluewin.ch

**Turkey:**

Air Trade Centre Ltd Sti Türkiye,
TR-34418 Seyrantepe / Instanbul
Tel. (+90) 02 12 / 28 34 510
Fax (+90) 02 12 / 27 83 964
atc.turkey@airtradecentre.com

**United Kingdom:**

Wolter UK Ltd.
GB-B37 7UQ Solihull
Tel. (+44) 01 21 / 63 55 390
Fax (+44) 01 21 / 63 55 391
info@wolteruk.com

## Middle East and North Africa

**Egypt:**

Tiba Engineering Industries Co.
Nasr City, Cairo
Tel. (+2) 02 / 40 22 866
Fax (+2) 02 / 40 44 771
tibaengineering@manz-group.com

**Israel:**

Lea Ventilation Industries Ltd.
IL-27113 Kiriyat-Bialik, Israel
Tel. (+972) 0 48 / 76 23 57
Fax (+972) 0 48 / 76 20 51
mail@lea.co.il

**United Arab Emirates, Kuwait, Lebanon:**

Wolter Ventilation LLC
Energy International
P.O. Box 3562 Sharjah, UAE
Tel. (+971) 06 / 53 43 477
Fax (+971) 06 / 53 43 756
energysh@emirates.net.ae

## Asia

**China Mainland:**

Taizhou Wolter Ventilation Co. Ltd.
Hengjie, Luqiao District
Taizhou City, Zhejiang
Tel. (+86) 576 / 26 22 666 (26 52 888)
Fax (+86) 576 / 26 56 830

**Hongkong:**

Wolter Asia Ltd.
Hong Kong
Tel. (+852) 0 24 / 56 01 98
Fax (+852) 0 24 / 56 02 90
info@wolter.com.hk

**India:**

Wolter Ventilators India Pvt. Ltd.
867 D, Block-A, Sushant Lok, Phase-I,
Gurgaon - 122009 (Haryana)
Tel. +91 124 2577797, 4261001-3
sales@wolterindia.in

**Indonesia:**

PT. Agung Kipas Kastara.
ID-14440 Jakarta Indonesia
Tel. +62 (0) 21 / 6667 6925, 6667 6926
Fax +62 (0) 21 / 6667 6927
indowolter@cbn.net.id

**Korea:**

Kaceco-Wolter
14-1, Dang-dong,Gunpo-shi, Gyeonggi-do
Tel. +82 (0) 31 / 4773 104
Fax +82 (0) 31 / 4773 132
wolter@kaceco.com / info@kaceco.com

**Malaysia:**

Vibrantech (M) Sdn Bhd.
47200 Petaling Jaya Selangor, Malaysia
Tel. +603 (0) 7847 3500
Fax +603 (0) 7847 3380
sales@vibrantech-sb.com

**Singapore:**

Wolter Pte. Ltd.
SG-569738 Singapore
Tel. (+65) 0 63 / 52 95 48
Fax (+65) 0 63 / 52 95 47
info@wolterfans.com.sg

**Sri Lanka:**

Sirocco Air Technologies (Pvt) Ltd.
28/12, Gemunu Mawatha, Kotuwegoda,
Rajagiriya, Sri Lanka
Tel. +94 11 7 392 010
Fax +94 11 7 392 015
suren@sairt.com

**Taiwan:**

Waxlink International Co., Ltd.
8F No. 218 Roosevelt Rd., Sec. 6
Taipei, Taiwan
Tel. (+886) 02 / 89 32 11 96
Fax (+886) 02 / 89 32 11 97
waxlink.tech@msa.hinet.net

**Thailand:**

Wolter Ventilation Co., Ltd.
Thamai Kratumban Samutsakorn 74110
Thailand
Tel. +66 (0) 3486 6555
Fax +66 (0) 3486 6599
natiphan@wolterfan.com

## Australia

The Sydney Fan Company.

NSW 2147, Sydney, Australia
Tel. +61 (0) 2 / 9624 4000
Fax +61 (0) 2 / 9624 4100
sales@thesydneyfancompany.com

**Wolter GmbH**
**Maschinen-und Apparatebau KG**

Am Wasen 11
D-76316 Malsch / Germany
Tel. +49 (0) 7204/9201-0
Fax +49 (0) 7204/9201-11
www.wolter.eu
info@wolter.eu

Air in Motion - **Wolter Fans** - www. wolterfans.de

Reference: **A09-IN**, V2016/November, Printed in November, 2016

**Wolter Ventilators India Pvt. Ltd.** • G1-793 (A), Riico Indl. Area, Road No.: - 20 A, Bhiwadi, Distt. Alwar, Rajasthan (India) - 301019 • TeleFax. (+91)1493 515016 • www.wolterfans.com • sales@wolterindia.in