TCF

TWIN CITY FAN

INDUSTRIAL PROCESS AND
COMMERCIAL VENTILATION SYSTEMS

EC PLENUM FANS

MODEL ECPFN





Model ECPFN



Overview

ECPFN

Twin City Fan & Blower, the world's most trusted supplier of plenum fans, now offers the Model ECPFN, a high-efficiency EC motor-driven plenum fan designed for data centers, air handlers and other demanding HVAC applications. The Model ECPFN combines the proven engineering and air movement expertise that Twin City Fan & Blower has developed over decades with the precise speed control, monitoring capability and operating efficiency of electronically commutated motor technology.

Available in multiple sizes, impeller designs, mounting configurations and motor options, the Model ECPFN gives users the flexibility to match fan performance to the specific needs of the application. Whether applied as part of a fan array, air handling unit, CRAH, CRAC, rooftop unit or retrofit project, the Model ECPFN delivers predictable airflow performance, efficient operation and the confidence of a solution tested and supported by Twin City Fan & Blower.

Typical Applications Include

Air Handling Units, Computer Room Air Handlers (CRAHs), Computer Room Air Conditioners (CRACs), HVAC Retrofits, Fan Arrays, Air Make-Up Units, Clean Rooms and Healthcare Environments

Impeller Types

7-Bladed and 9-Bladed High Efficiency Airfoil Impellers

Standard Construction

Galvanized Steel Construction with Aluminum Impeller and Inlet Funnel, Up to Class II

Communication & Control

Modbus, BACnet, 0-10V, 4-20 mA, and PWM

Certifications

AMCA Sound/Air and FEI

Twin City Fan & Blower certifies that the Model ECPFN EC Plenum Fans shown herein are licensed to bear the AMCA Seal. Certified performance data may be found in Twin City Fan & Blower's Fan Selector software.

Scan the QR code to search Twin City Fan & Blower's AMCA-certified products.

For complete product performance, drawings and available accessories, download our Fan Selector software at *tcf.com*.

Overview

ECPFN

Benefits of EC-Controlled Fans

High efficiency across a wide speed range. EC motors are designed with flatter efficiency curves than many traditional motor systems, helping maintain efficient operation even as fan speed changes with system demand.

Integrated speed control. The motor and drive operate as a single system, reducing the need for a separate external VFD and simplifying installation, wiring, and control.

Precise airflow adjustment. Fan speed can be adjusted to match changing airflow requirements, making EC motor-driven fans well suited for variable-volume HVAC systems and data center cooling applications.

Common communication and control options. EC motor systems can support control through analog inputs and digital communication protocols such as Modbus and BACnet, allowing integration with building management systems and HVAC controllers.

Built-in monitoring and protection. Many EC motor systems provide access to operating data such as voltage, current, temperature, power output, and torque, while also supporting alarms for thermal overload or other fault conditions.

Reduced maintenance. Direct-drive EC plenum fans eliminate belts and external fan bearings, reducing routine maintenance requirements compared with belt-driven fan systems.

Compact fan array integration. Wall-mounted EC plenum fans are well suited for modular fan arrays, helping reduce installation space while supporting redundancy, serviceability, and efficient system design.

Lower operating cost potential. By combining efficient fan design, EC motor efficiency, and controllable speed, EC motor-driven fans can help reduce power consumption in applications where airflow demand varies over time.



EC Plenum Array

ENERGY REGULATIONS

Twin City Fan & Blower supports energy efficiency regulations enacted by the U.S. Department of Energy (DOE) and specific states. The selection and application of fan products is a significant part of these regulations. Engineers and specifiers must understand how to apply TCF products to their specific applications to meet applicable DOE and state regulatory requirements. Twin City Fan & Blower has made significant investments in product testing and development to provide efficient products. Developments in Twin City Fan & Blower's Fan Selector software are in place to aid your decision in product selection to assist with meeting the efficiency requirements as stipulated in the applicable regulations.

Impellers

High efficiency, non-overloading airfoil impellers are provided on all sizes and arrangements.

7-Bladed Impellers

- High efficiency, aluminum welded airfoil impeller
- 19.70" to 27.95" diameters (500 mm to 710 mm)
- Airflow to 21,100 CFM (35,850 m^3/hour)
- Static pressure up to 9.7" w.g. (2,165 Pa)

9-Bladed Impellers

- High efficiency, aluminum welded airfoil impeller
- 20.00" to 27.00" diameters (510 mm to 690 mm)
- Airflow to 19,700 CFM (33,470 m^3/hour)
- Static pressure up to 8.7" w.g. (2,165 Pa)



7-Bladed Impeller

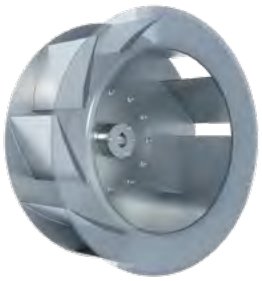

9-Bladed Impeller

OPTIONS/ACCESSORIES

1 **Two-Tap Piezometer Airflow Measuring System** Designed to provide a simple, reliable method for estimating fan airflow. The inlet funnel functions as a flow nozzle, allowing airflow to be calculated by measuring the pressure differential between a high-pressure tap located on the panel face and a low-pressure tap located at the throat of the inlet funnel. Customer-supplied tubing can be connected directly to these taps and routed to a pressure transducer or building control system.

This system, included as standard, provides airflow measurement without placing tubes, probes or sensors directly in the high-velocity inlet airstream, helping avoid unnecessary airflow obstruction or performance disruption. The Model ECPFN airflow measurement equations are based on Twin City Fan & Blower testing and are intended for flow estimation from 40% to 100% of wide-open volume when proper inlet conditions are maintained. For best results, the fan inlet should be free of obstructions, vanes or pre-swirl, and air density at the inlet should be accurately determined.

2 **Safety Screens (optional)** Inlet screens mounted to the fan inlet.



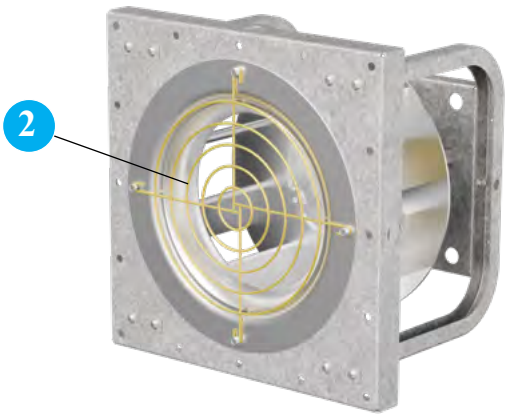

Fan Selection Recommendations

1. **Account for system effect and plenum losses.** System effect and plenum losses should be estimated and added to the required static pressure before making fan selections. Properly accounting for these losses helps ensure the selected Model ECPFN operates at the intended airflow and pressure.
2. **Select within the recommended operating range.** Fans should be selected so the point of operation is approximately between 55% and 90% of the free delivery point on the fan curve.
3. **Use the standard airflow measurement system.** Where airflow monitoring is required, use the standard two-tap piezometer airflow measurement system provided on the Model ECPFN. Avoid placing probes, sensors or other obstructions directly in the fan inlet funnel or high-velocity inlet airstream, as these devices can disturb airflow and affect fan performance.
4. **Verify support structure and mounting conditions.** The Model ECPFN is designed for wall-mounted installation. The mounting panel, cabinet structure and surrounding supports should be designed to properly support the fan assembly and limit vibration transmission. Follow the installation, operation and maintenance instructions supplied with the fan.

Location and Placement of Model ECPFN Fans

Model ECPFN fans may be applied individually or as part of a multi-fan array. In either configuration, proper fan placement within the air handler or plenum cabinet is important to help preserve rated fan performance, minimize system effect losses and promote stable airflow through the fan. The following guidelines should be considered during air handler and fan array design.

1. **Center each fan inlet in the available plenum space.** For single-fan applications, the fan inlet should be centered in the available inlet plenum area where practical. For fan arrays, divide the plenum into imaginary cells of equal area and center each fan inlet within its cell. This helps promote more uniform airflow into each inlet funnel and supports consistent performance across the array.
2. **Provide adequate inlet clearance.** As a guide, airflow approaching the fan inlet should converge at an angle not greater than 45° and a minimum inlet clearance of one fan impeller diameter is recommended where practical. This applies to both single-fan installations and each fan within an array.
3. **Provide adequate outlet plenum clearance.** To avoid system effects and ensure predictable airflow, a wall clearance of one-half fan impeller diameter (0.5D) to the periphery of the fan impeller is recommended in the outlet plenum. In fan arrays, this guidance should be considered for the outer fans near cabinet walls as well as for spacing between adjacent fan discharge areas.
4. **Allow space for downstream airflow equalization.** As a guide, the minimum clearance between the back of the fan impeller and the nearest downstream component should be one impeller diameter. Reduced clearance may increase pressure drop by limiting the ability of the airflow to equalize behind the impeller.
5. **Plan fan array layout for balanced airflow.** When multiple Model ECPFN fans are installed in a plenum, the array should be laid out to promote similar inlet and outlet conditions for each fan. Avoid crowding fans against cabinet walls, filters, coils, structural members or other components that could create uneven airflow from one fan position to another.
6. **Evaluate reduced spacing when required.** The clearances listed above are application guidelines and may not be practical in every air handler or fan array design. Contact Twin City Fan & Blower for guidance when reduced spacing, unusual airflow paths or compact cabinet layouts are required.

Recommended Placement and Spacing in a Fan Array

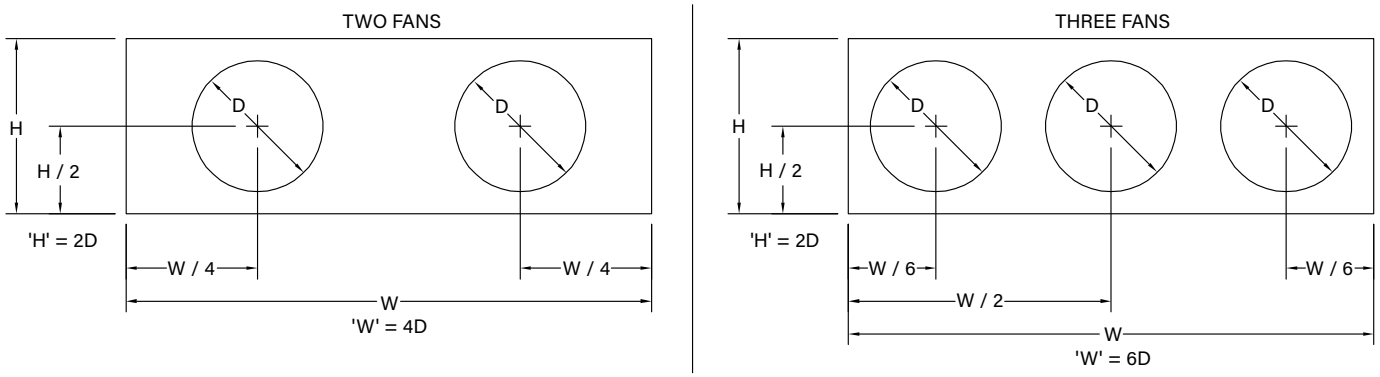

NOTE: 'D'= Impeller diameter

Contact a Twin City Fan & Blower Sales Application Engineer for guidance with application-specific analysis.

Maximum RPM, Bare Fan Weights, Impeller Weights & WR²

SIZE	IMPELLER DIA. (IN.)	MAX. RPM (70°F)	IMPELLER		BARE FAN WEIGHT* (LB)
			WT. (LB)	WR² (LB-FT²)	
200-7-AF	19.70	2,674	24.50	7.36	82
200-9-AF	20.00	2,674	21.00	7.40	75
222-7-AF	22.05	2,240	38.80	14.24	114
222-9-AF	22.25	2,215	30.00	12.00	103
245-7-AF	24.80	1,690	46.10	23.49	122
245-9-AF	24.50	1,710	35.00	21.00	107
270-7-AF	27.95	1,540	60.20	45.09	174
270-9-AF	27.00	1,981	40.00	29.00	155

*Some variation possible due to differing motor mounting structures

DIMENSIONAL DATA

Horizontal and Vertical, Arr. 4 – Class I and II
WEG W30 Slim

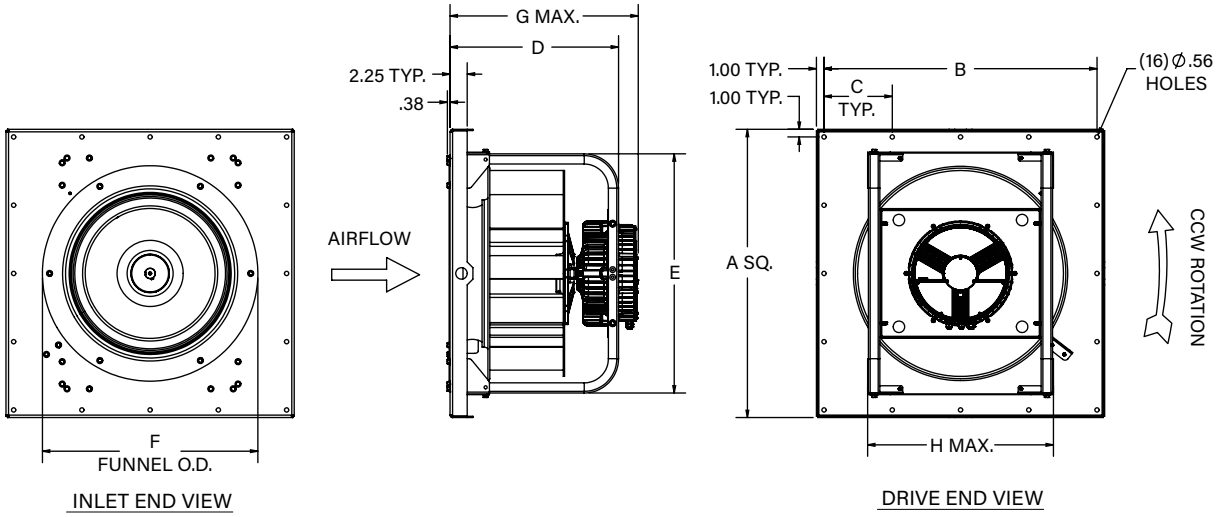

NOTES:
1. Model ECPFN can be mounted horizontally or vertically.
2. 'CCW' rotation is standard. Rotation is determined by viewing the drive end.
3. Reversed front panel flange for inlet side mounting is optional.

Size 200 - 270, WEG W30 Slim Motor

SIZE	A	B	C	D	E	F	G	H
200	24.80	22.80	5.70	17.86	21.16	20.75	20.43	19.65
222	31.50	29.50	7.38	19.16	27.05	23.00	21.75	19.65
245	31.50	29.50	7.38	20.41	27.05	26.00	23.00	19.65
270	37.80	35.80	8.95	22.09	31.36	28.25	24.68	24.37

AC500084222

DIMENSIONS ARE SUBJECT TO CHANGE. CERTIFIED DRAWINGS AVAILABLE UPON REQUEST.

Horizontal and Vertical, Arr. 4 – Class I and II Infinitum

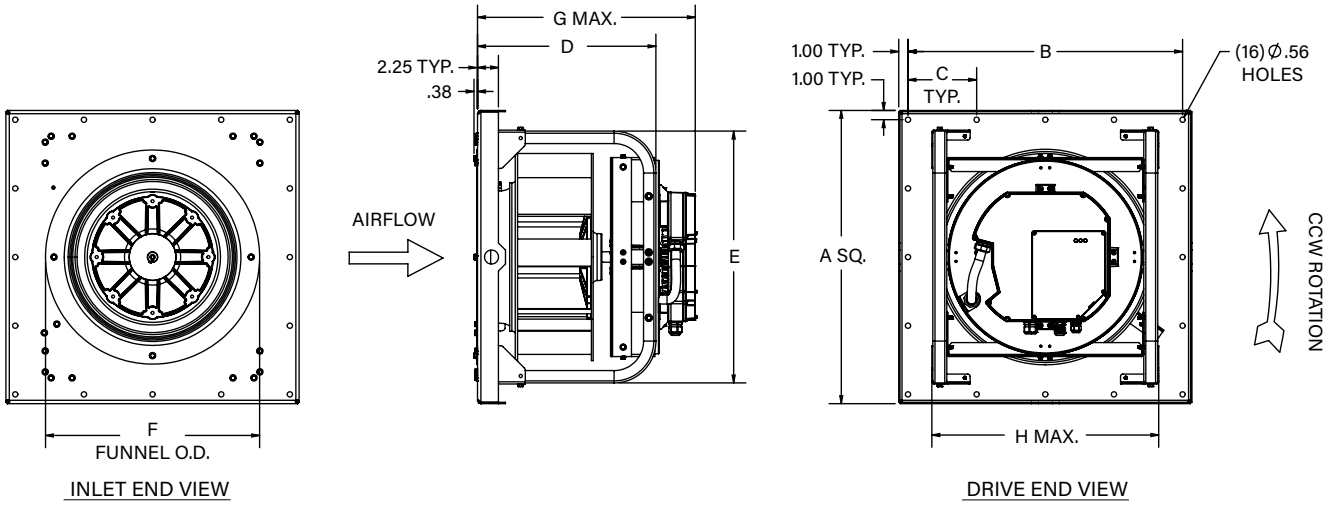

NOTES:
1. Model ECPFN can be mounted horizontally or vertically.
2. 'CCW' rotation is standard. Rotation is determined by viewing the drive end.
3. Reversed front panel flange for inlet side mounting is optional.

Size 200 - 270, Infinitum Motor

SIZE	A	B	C	D	E	F	G	H
200	24.80	22.80	5.70	22.87	21.16	20.75	22.87	19.65
222	31.50	29.50	7.38	19.16	27.05	23.00	23.42	24.37
245	31.50	29.50	7.38	20.41	27.05	26.00	24.67	24.37
270	37.80	35.80	8.95	22.09	31.36	28.25	26.32	24.37

AC500084223

DIMENSIONS ARE SUBJECT TO CHANGE. CERTIFIED DRAWINGS AVAILABLE UPON REQUEST.

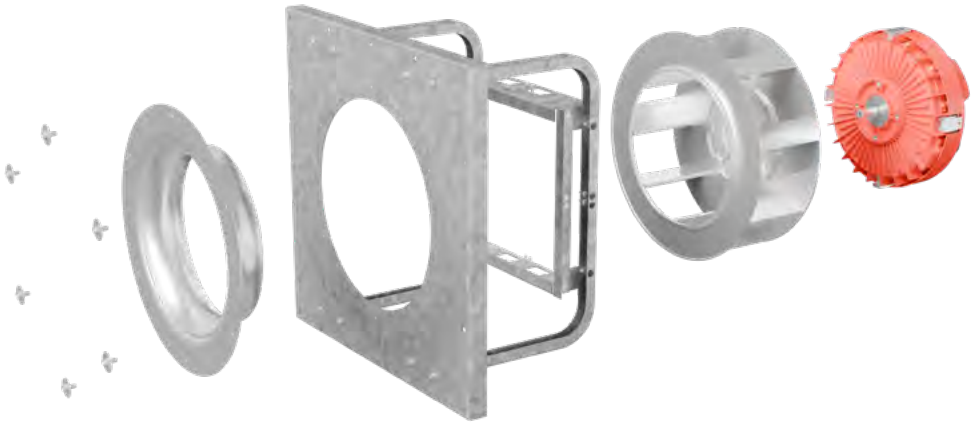

TCF
TWIN CITY FAN



Model

ECPFN

Fans shall be Model ECPFN centrifugal plenum (plug) type, as manufactured by Twin City Fan & Blower, Minneapolis, Minnesota.

PERFORMANCE — Performance ratings shall conform to AMCA Standard 208 (fan energy index), 211 (air performance) and 311 (sound performance). Fans shall be tested in accordance with ANSI/AMCA Standard 210 (air performance) and 300 (sound performance) in an AMCA accredited laboratory. Fans shall be licensed to bear the AMCA certified ratings seal for both sound and air, and fan energy index (FEI). Sound certification shall apply to both inlet and outlet sound power levels.

Fans shall have a sharply rising pressure characteristic extending through the operating range and continuing to rise beyond the peak efficiency to ensure quiet and stable operation. Fans shall have a non-overloading design with self-limiting horsepower characteristics and shall reach a peak in the normal selection area. All fans shall be capable of operating over the minimum pressure class limits as specified in AMCA Standard 99.

CONSTRUCTION — Fans shall be unhoused and incorporate a non-overloading type backward inclined airfoil blade impeller, heavy-gauge galvanized steel frame and inlet plate.

FRAME AND INLET PANEL — Inlet panels shall be of heavy-gauge galvanized steel construction. The inlet panel incorporates a removable spun inlet cone designed for smooth airflow into the fan impeller.

IMPELLER — Impellers shall have either seven or nine blades and a blade retaining ring on the inlet side to allow higher efficiencies over the performance range of the fan. All impellers on direct drive arrangement 4 fans shall have airfoil-shaped extruded aluminum blades.

ACCESSORIES — When specified, accessories shall be provided by Twin City Fan & Blower to maintain one source responsibility.

FACTORY RUN TEST — All fans prior to shipment shall be completely assembled and test run as a unit at the specified operating speed or maximum RPM allowed for the particular construction type. Maximum vibration shall be within the limits of ANSI/AMCA 204 Fan Application Category BV-3. Balance readings shall be taken by electronic type equipment in the axial, vertical and horizontal directions on each of the bearings. Records shall be maintained and a written copy shall be available upon request.

TCF
TWIN CITY FAN

INDUSTRIAL PROCESS AND COMMERCIAL VENTILATION SYSTEMS

CENTRIFUGAL FANS | UTILITY SETS | PLENUM & PLUG FANS | INLINE CENTRIFUGAL FANS
MIXED FLOW FANS | TUBEAXIAL & VANEAXIAL FANS | WALL MOUNTED FANS | ROOF VENTILATORS
CENTRIFUGAL ROOF & WALL EXHAUSTERS | CEILING VENTILATORS | GRAVITY VENTILATORS | DUCT BLOWERS
RADIAL BLADED FANS | RADIAL TIP FANS | HIGH EFFICIENCY INDUSTRIAL FANS | PRESSURE BLOWERS
LABORATORY EXHAUST FANS | FILTERED SUPPLY FANS | MANCOOLERS | FIBERGLASS FANS | CUSTOM FANS

TCF
TWIN CITY FAN

TWIN CITY FAN & BLOWER
TCF.COM

5959 TRENTON LANE N. | MINNEAPOLIS, MN 55442 | PHONE: 763-551-7600 | FAX: 763-551-7601

©2026 Twin City Fan Companies, Ltd., Minneapolis, MN. All rights reserved. Catalog illustrations cover the general appearance of Twin City Fan & Blower products at the time of publication and we reserve the right to make changes in design and construction at any time without notice.