645DD

Stationary Louver Double Drainable Blade

Extruded Aluminum

RELIABLE by RUSKIN

APPLICATION

The 645DD is a 6″ deep, extruded aluminum, double drainable, stationary louver that is designed to protect air intake and exhaust openings on exterior walls. This louver is designed with a drainable gutter system that channels water from blades to downspouts in the jambs. Here, water is exhausted out of the front of the louver. The architecturally styled hidden mullion allows for a continuous line appearance.

STANDARD CONSTRUCTION

Frame	6″ (152) deep, 6063T6 extruded aluminum with .120″ (3) nominal wall thickness. Downspouts and caulking slots provided.
Blades	6063T6 extruded aluminum with .100″ (2.5) nominal wall thickness. Double drainable blades are positioned at 45° angle and spaced approximately 6″ (152) center to center.
Screen	5/8″ x .040″ (16 x 1) expanded, flattened aluminum bird screen in removable frame. Screen adds approximately 1/2″ (13) to louver depth.
Finish	Mill.
Minimum Size	12″w x 12″h (305 x 305).
Approximate Shipping Weight	5 lbs. per sq. ft.
Maximum Factory Assembly Size	Shall be 64 sq. ft. (6m²) per section, not to exceed 120″ wide and 90″ high (3048 and 2286) or 90″ wide and 120″ high (2286 and 3048). Louvers larger than the maximum factory assembly size will require field assembly of smaller sections.
Supports	Louvers may be provided with rear mounted blade supports that increase overall louver depth depending on louver size, assembly configuration or windload.

Consult Reliable for additional information.

FEATURES

- Published performance ratings based on testing in accordance with AMCA Publication 511
- Double drain gutters in each blade, and downspouts in jambs and mullions to drain water from louver for minimum water cascade from blade to blade
- Hidden mullions allowing continuous line appearance up to 120″ (3048)
- All aluminum construction for low maintenance and high resistance to corrosion
- Low pressure drop and low water penetration

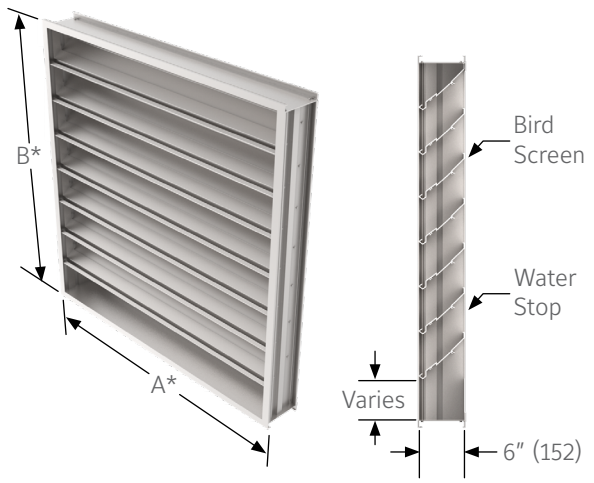

5 YEAR LIMITED WARRANTY

ISO9001 CERTIFIED

VARIATIONS

Variations to the basic design of the louver are available at additional cost. They include:

- Installation angles
- Extended sill
- Hinged frame
- Front or rear security bars
- Filter racks
- A variety of bird and insect screens
- Optional finishes available at additional cost: Prime coat, 50% PVDF (modified fluoropolymer), Epoxy, Pearledize, 70% PVDF, Clear and Anodized finishes. (Some variation in anodize color consistency is possible)

Consult Reliable for other special requirements.

FRAME CONSTRUCTION

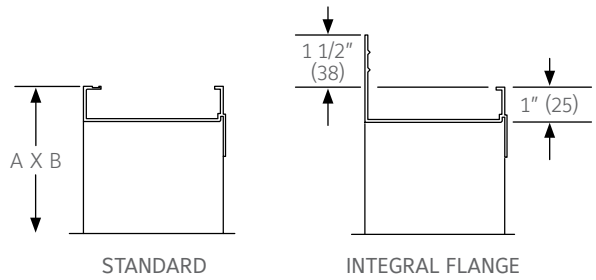

Note:

- Dimensions in inches, parenthesis ( ) indicate millimeters.
- Units can be furnished actual size or with size deducts.

ALL STATED SPECIFICATIONS ARE SUBJECT TO CHANGE WITHOUT NOTICE OR OBLIGATION.

© Reliable October 2025

PERFORMANCE DATA

AMCA Standard 500 provides a reasonable basis for testing and rating louvers. Testing to AMCA 500 is performed under a certain set of laboratory conditions. This does not guarantee that other conditions will not occur in the actual environment where louvers must operate

The louver system should be designed with a reasonable safety factor for louver performance. To ensure protection from water carryover, design with a performance level somewhat below maximum desired pressure drop and .01 oz./sq. ft. of water penetration.

FREE AREA GUIDE

Free Area Guide shows free area in ft² and m² for various sizes of 645DD.

	Width – Inches and Meters																		
Height – Inches and Meters	**12** 0.30	**18** 0.45	**24** 0.60	**30** 0.75	**36** 0.90	**42** 1.05	**48** 1.20	**54** 1.35	**60** 1.50	**66** 1.65	**72** 1.80	**78** 1.95	**84** 2.10	**90** 2.25	**96** 2.40	**102** 2.55	**108** 2.70	**114** 2.95	**120** 3.00
12 0.30	**0.15** 0.01	**0.24** 0.02	**0.34** 0.03	**0.43** 0.04	**0.52** 0.05	**0.62** 0.06	**0.71** 0.07	**0.80** 0.07	**0.90** 0.08	**0.99** 0.09	**1.08** 0.10	**1.19** 0.11	**1.27** 0.12	**1.36** 0.13	**1.46** 0.14	**1.55** 0.14	**1.64** 0.15	**1.73** 0.16	**1.83** 0.17
18 0.45	**0.38** 0.03	**0.61** 0.06	**0.84** 0.08	**1.07** 0.10	**1.31** 0.12	**1.54** 0.14	**1.77** 0.16	**2.00** 0.19	**2.24** 0.21	**2.47** 0.23	**2.70** 0.25	**2.94** 0.27	**3.17** 0.29	**3.40** 0.32	**3.63** 0.34	**3.87** 0.36	**4.10** 0.38	**4.33** 0.40	**4.56** 0.42
24 0.60	**0.60** 0.06	**0.97** 0.09	**1.35** 0.13	**1.72** 0.16	**2.09** 0.19	**2.46** 0.23	**2.83** 0.26	**3.21** 0.30	**3.58** 0.33	**3.95** 0.37	**4.32** 0.40	**4.69** 0.44	**5.07** 0.47	**5.44** 0.51	**5.81** 0.54	**6.18** 0.58	**6.56** 0.61	**6.93** 0.64	**7.30** 0.68
30 0.75	**0.83** 0.08	**1.34** 0.12	**1.85** 0.17	**2.36** 0.22	**2.87** 0.27	**3.38** 0.31	**3.90** 0.36	**4.41** 0.41	**4.92** 0.46	**5.43** 0.51	**5.94** 0.55	**6.45** 0.60	**6.97** 0.65	**7.48** 0.70	**7.99** 0.74	**8.50** 0.79	**0.01** 0.84	**9.52** 0.89	**10.04** 0.93
36 0.90	**1.05** 0.10	**1.70** 0.16	**2.35** 0.22	**3.01** 0.28	**3.66** 0.34	**4.31** 0.40	**4.96** 0.46	**5.61** 0.52	**6.26** 0.58	**6.91** 0.64	**7.56** 0.70	**8.21** 0.76	**8.87** 0.82	**9.52** 0.89	**10.17** 0.95	**10.82** 1.01	**11.47** 1.07	**12.12** 1.13	**12.77** 1.19
42 1.05	**1.28** 0.12	**2.07** 0.19	**2.86** 0.27	**3.65** 0.34	**4.44** 0.41	**5.23** 0.49	**6.02** 0.56	**6.81** 0.63	**7.60** 0.71	**8.39** 0.78	**9.18** 0.85	**9.97** 0.93	**10.76** 1.00	**11.55** 1.07	**12.35** 1.15	**13.14** 1.22	**13.93** 1.30	**14.72** 1.37	**15.51** 1.44
48 1.20	**1.50** 0.14	**2.43** 0.23	**3.36** 0.31	**4.29** 0.40	**5.22** 0.49	**6.15** 0.57	**7.08** 0.66	**8.01** 0.75	**8.94** 0.83	**9.87** 0.92	**10.80** 1.00	**11.73** 1.09	**12.66** 1.18	**13.59** 1.26	**14.52** 1.35	**15.45** 1.44	**16.38** 1.52	**17.31** 1.61	**18.24** 1.70
54 1.35	**1.73** 0.16	**2.80** 0.26	**3.87** 0.36	**4.94** 0.46	**6.01** 0.56	**7.08** 0.66	**8.15** 0.76	**9.22** 0.86	**10.28** 0.96	**11.35** 1.06	**12.42** 1.16	**13.48** 1.25	**14.56** 1.35	**15.63** 1.45	**16.70** 1.55	**17.77** 1.65	**18.84** 1.75	**19.91** 1.85	**20.98** 1.95
60 1.50	**1.95** 0.18	**3.16** 0.29	**4.37** 0.41	**5.58** 0.52	**6.79** 0.63	**8.00** 0.74	**9.21** 0.86	**10.42** 0.97	**11.63** 1.08	**12.83** 1.19	**14.04** 1.31	**15.25** 1.42	**16.46** 1.53	**17.67** 1.64	**18.88** 1.76	**20.09** 1.87	**21.30** 1.98	**22.51** 2.09	**23.71** 2.21
66 1.65	**2.19** 0.20	**3.53** 0.33	**4.88** 0.45	**6.23** 0.58	**7.57** 0.70	**8.92** 0.83	**10.27** 0.96	**11.62** 1.08	**12.97** 1.21	**14.32** 1.33	**15.66** 1.46	**17.01** 1.58	**19.36** 1.71	**19.71** 1.83	**21.06** 1.96	**22.41** 2.08	**23.75** 2.21	**25.10** 2.33	**26.45** 2.46
72 1.80	**2.39** 0.22	**3.87** 0.36	**5.34** 0.50	**6.82** 0.63	**8.30** 0.77	**9.77** 0.91	**11.25** 1.05	**12.73** 1.18	**14.20** 1.32	**15.68** 1.46	**17.16** 1.60	**18.64** 1.73	**20.11** 1.87	**21.59** 2.01	**23.07** 2.15	**24.54** 2.28	**26.02** 2.42	**27.50** 2.56	**28.98** 2.69
78 1.95	**2.61** 0.24	**4.23** 0.39	**5.85** 0.54	**7.46** 0.69	**9.08** 0.84	**10.70** 0.99	**12.31** 1.15	**13.93** 1.30	**15.55** 1.45	**17.16** 1.60	**18.78** 1.75	**20.40** 1.90	**22.01** 2.05	**23.63** 2.20	**25.24** 2.35	**26.86** 2.50	**28.48** 2.65	**30.09** 2.80	**31.71** 2.95
84 2.10	**2.84** 0.26	**4.59** 0.43	**6.35** 0.59	**8.11** 0.75	**9.86** 0.92	**11.62** 1.08	**13.37** 1.24	**15.13** 1.41	**16.89** 1.57	**18.64** 1.73	**20.40** 1.90	**22.15** 2.06	**23.91** 2.22	**25.67** 2.39	**27.42** 2.55	**29.18** 2.71	**30.93** 2.88	**32.69** 3.04	**34.45** 3.20
90 2.25	**3.06** 0.28	**4.96** 0.46	**6.86** 0.64	**8.75** 0.81	**10.65** 0.99	**12.54** 1.17	**14.44** 1.34	**16.33** 1.52	**18.23** 1.70	**20.12** 1.87	**22.02** 2.05	**23.91** 2.22	**25.81** 2.40	**27.71** 2.58	**29.60** 2.75	**31.50** 2.93	**33.39** 3.11	**35.29** 3.28	**37.18** 3.46
96 2.40	**3.29** 0.31	**5.32** 0.50	**7.36** 0.68	**9.39** 0.87	**11.43** 1.06	**13.46** 1.25	**15.50** 1.44	**17.53** 1.63	**19.57** 1.82	**21.60** 2.01	**23.64** 2.20	**25.67** 2.39	**27.71** 2.58						
102 2.55	**3.52** 0.33	**5.69** 0.53	**7.86** 0.73	**10.04** 0.93	**12.21** 1.14	**14.39** 1.34	**16.56** 1.54	**18.74** 1.74	**20.91** 1.94	**23.08** 2.15	**25.26** 2.35	**27.43** 2.55	**29.61** 2.75						
108 2.70	**3.74** 0.35	**6.05** 0.56	**8.37** 0.78	**10.68** 0.99	**13.00** 1.21	**15.31** 1.42	**17.62** 1.64	**19.94** 1.85	**22.25** 2.07	**24.57** 2.28	**26.88** 2.50	**29.19** 2.71	**31.51** 2.93						
114 2.85	**3.97** 0.37	**5.42** 0.60	**8.87** 0.83	**11.33** 1.05	**13.78** 1.28	**16.23** 1.51	**18.69** 1.74	**21.14** 1.97	**23.59** 2.19	**26.05** 2.42	**28.50** 2.65	**30.95** 2.88	**33.41** 3.11						
120 3.00	**4.19** 0.39	**6.78** 0.63	**9.38** 0.87	**11.97** 1.11	**14.56** 1.35	**17.16** 1.60	**19.75** 1.84	**22.34** 2.08	**24.93** 2.32	**27.53** 2.56	**30.12** 2.80	**32.71** 3.04	**35.31** 3.28						

ALL STATED SPECIFICATIONS ARE SUBJECT TO CHANGE WITHOUT NOTICE OR OBLIGATION.

© Reliable October 2025

PRESSURE DROP

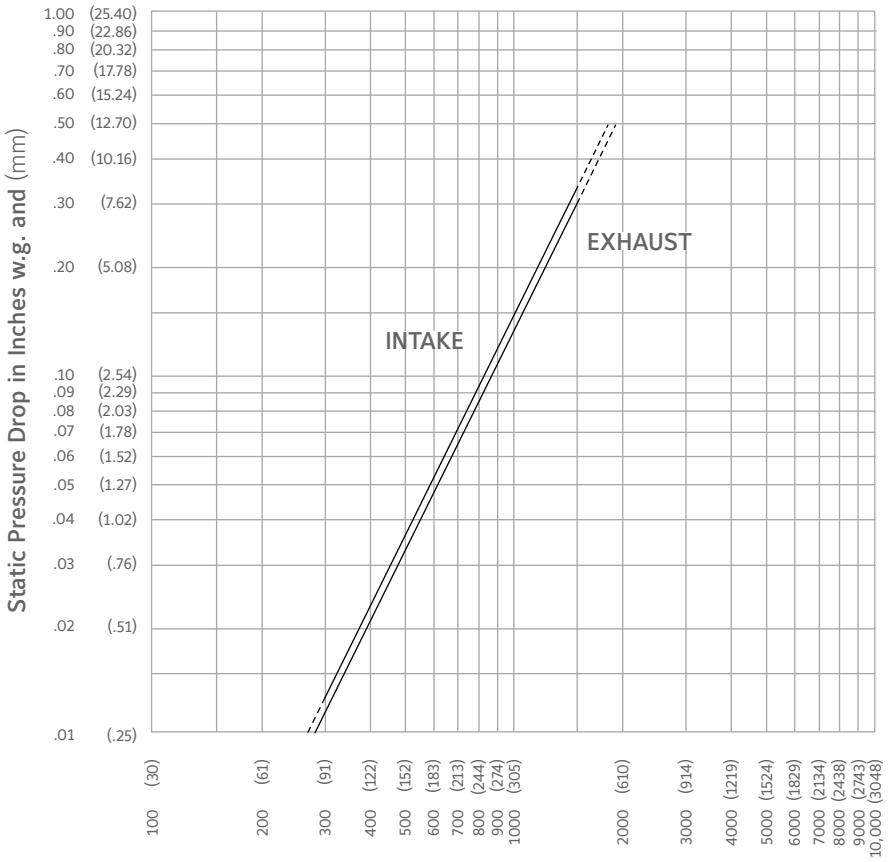

WATER PENETRATION GRAPH

Test size 48″ wide X 48″ high (1219 X 1219)
Beginning point of water penetration at .01 oz. /sq. ft. is 1080 fpm (329 m/min).

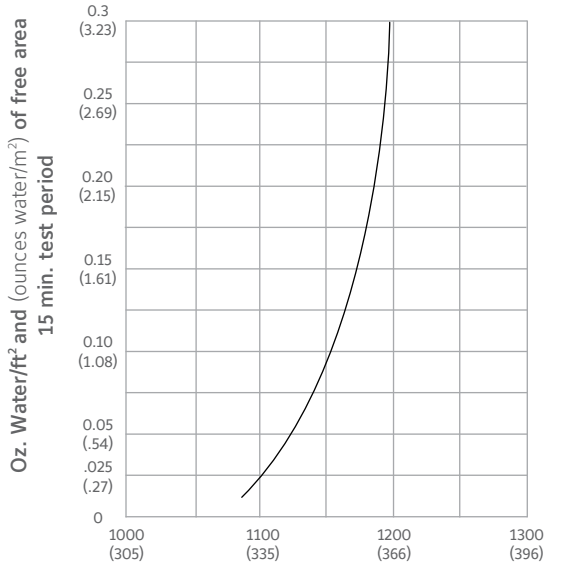

Ruskin Company certifies that the 645DD Louvers shown herein are licensed to bear the AMCA Seal. The ratings shown are based on tests and procedures performed in accordance with AMCA Publication 511 and comply with the requirements of the AMCA Certified Ratings Program. The AMCA Certified Ratings Seal applies to air performance ratings and water penetration ratings only.

ALL STATED SPECIFICATIONS ARE SUBJECT TO CHANGE WITHOUT NOTICE OR OBLIGATION.
© Reliable October 2025

TYPICAL INSTALLATION DETAILS

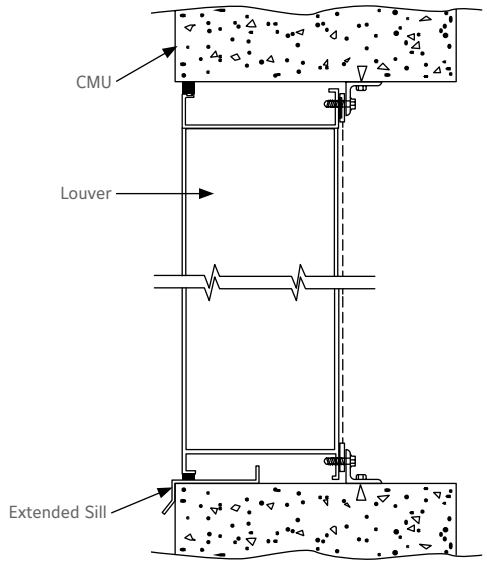

MASONRY WALL

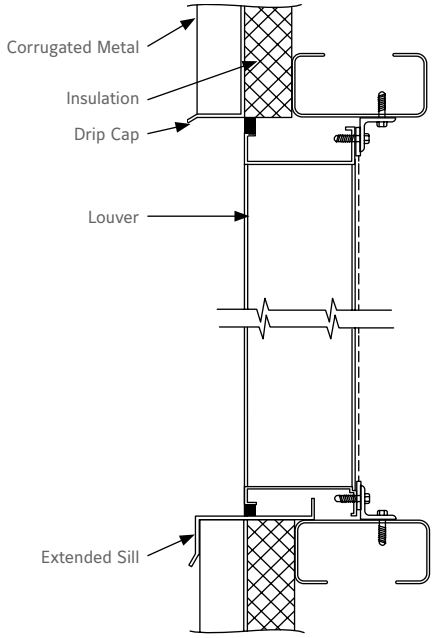

METAL PANEL WALL

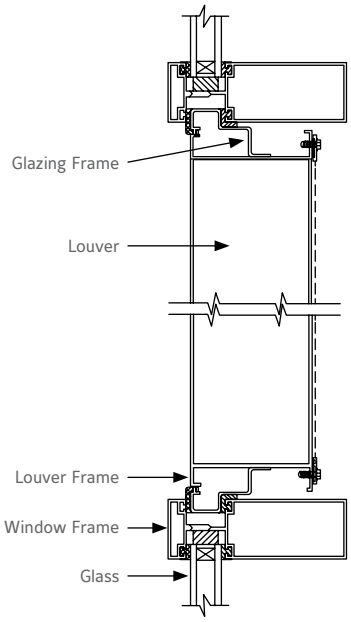

GLAZING FRAME

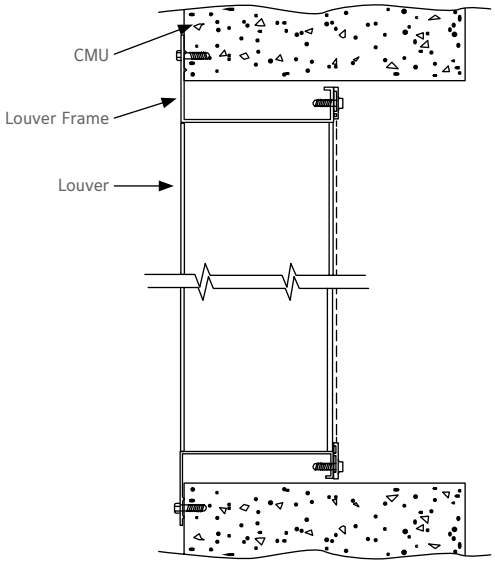

FLANGE MOUNT

ALL STATED SPECIFICATIONS ARE SUBJECT TO CHANGE WITHOUT NOTICE OR OBLIGATION.
© Reliable October 2025

TYPICAL INSTALLATION DETAILS

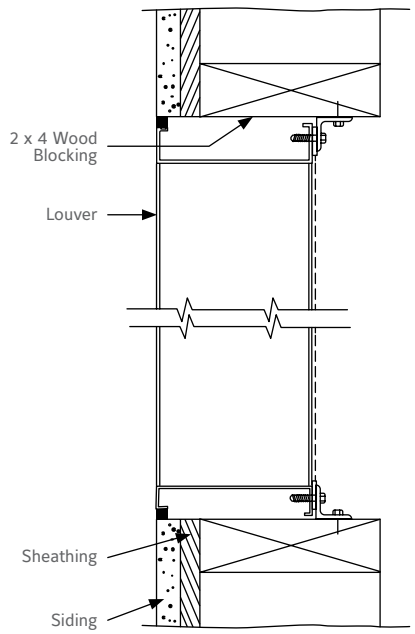

WOOD INSTALLATION

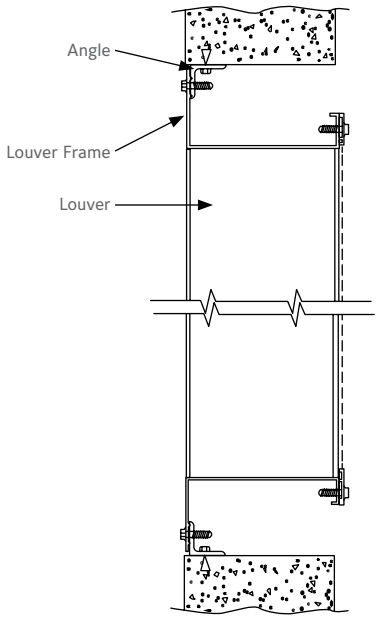

ANGLE SUBFRAME

Options at additional cost.

SUGGESTED SPECIFICATION

Furnish and install louvers as hereinafter specified where shown on plans or as described in schedules. Louvers shall be stationary double drainable type entirely contained within a 6" (152) frame. Louver shall include a drain gutter in each blade and downspouts in jambs and mullions. Louver components (heads, jambs, sills, blades & mullions) shall be factory assembled by the louver manufacturer. Louver sizes too large for shipping shall be built up by the contractor from factory assembled louver sections to provide overall sizes required. Louver design shall limit span between visible mullions to 10 feet (3048) and shall incorporate structural supports required to withstand a wind load of 30 psf (1.44 kPa) equivalent to 110 mph (177 kph) wind. Specifier may substitute any loading required.

Louvers shall be Reliable Model 645DD extruded 6063T6 aluminum construction as follows:

Frame: .120" (3) wall thickness.

Blades: .100" (2.5) wall thickness at 45° angle and spaced approximately 6" (152) center to center.

Screen: 5/8" x .040" (16 x 1) expanded, flattened aluminum in removable frame.

Finish: Select finish specification from Reliable Finishes Brochure.

Published louver performance data bearing the AMCA Certified Ratings Seal for Air Performance & Water Penetration must be submitted for approval prior to fabrication and must demonstrate pressure drop and water penetration equal to or less than the Reliable model (by Ruskin Company) specified.

LINKS TO IMPORTANT DOCUMENTS

Document Title
Finishes and Color Guide
Limited Warranty Document

RELIABLE by RUSKIN

1300 Enterprise Road, P.O. Box 580, Geneva, Alabama 36340
Tel: 334-684-3621
Tel: 800-624-3914
Fax: 800-508-1469

ALL STATED SPECIFICATIONS ARE SUBJECT TO CHANGE WITHOUT NOTICE OR OBLIGATION.

© Reliable October 2025