Chemical Resistant Centrifugal Fan

- High Efficiency
- Direct Driven & Belt Driven
- Backward Curved Impeller

R04.B

Wolter Fans - Air in Motion

Backward Curve High Efficiency Chemical Resistant Centrifugal Fan

CHEM xx-xx-xx Series: Direct Driven & Belt Driven

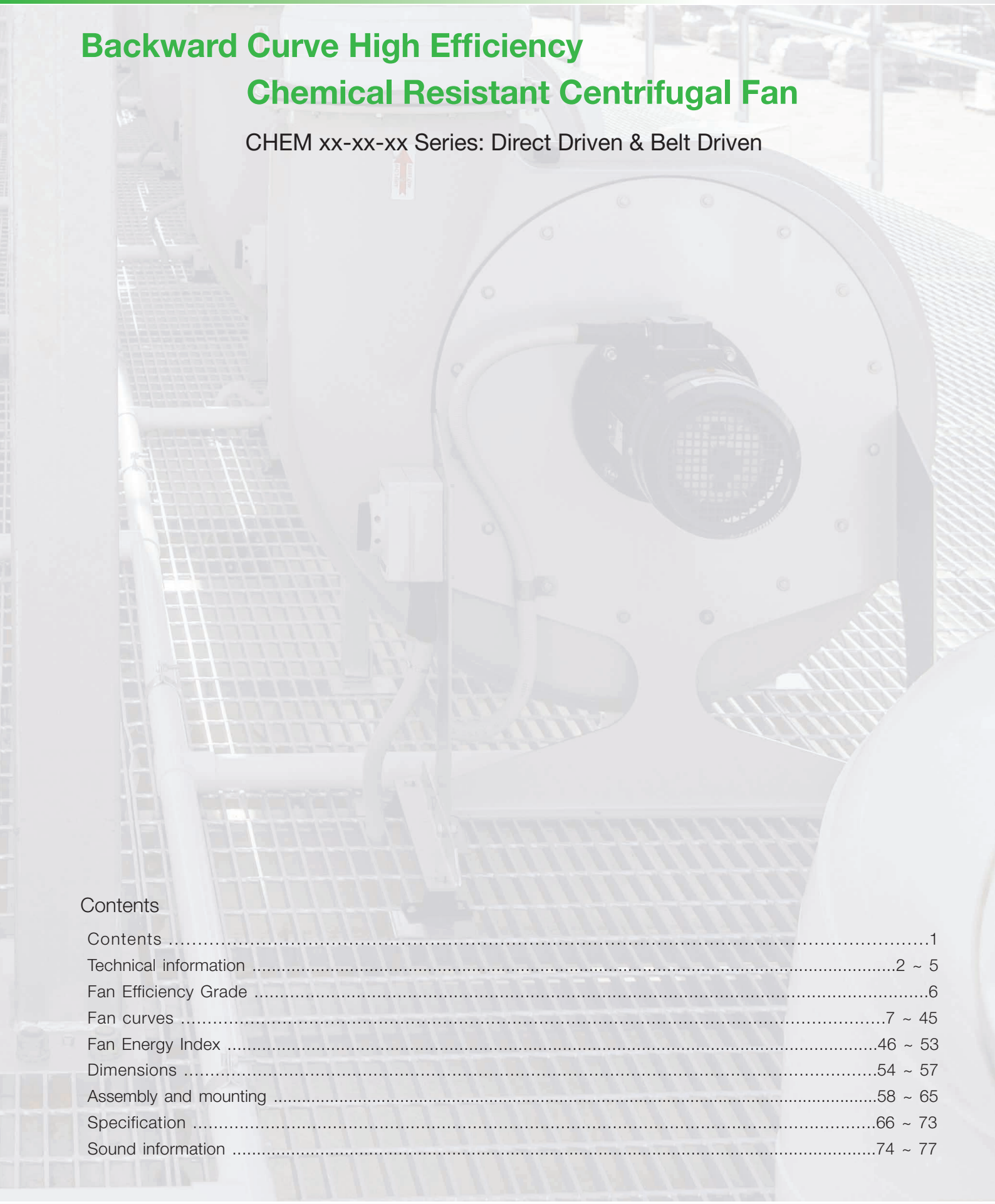

Contents

Contents 1
Technical information .....2 ~ 5
Fan Efficiency Grade 6
Fan curves .....7 ~ 45
Fan Energy Index .....46 ~ 53
Dimensions .....54 ~ 57
Assembly and mounting .....58 ~ 65
Specification .....66 ~ 73
Sound information .....74 ~ 77

Dongguan Wolter Chemco Ventilation Ltd. certifies that the Chemical Resistant Plastic Centrifugal Fan CHEM xx-xx-xx Series shown herein are licensed to bear the AMCA Seal. The ratings shown are based on tests and procedures performed in accordance with AMCA Publication 211 and AMCA Publication 311 and comply with the requirements of the AMCA Certified Ratings Program.

Fan type code

CHEM 400 PP - 450 P - 453 PP

- Material of Impeller: PP, PE, PVC, PVDF, GRP, FRP, SS
- Inlet Sizes
- Blade Height Version: P, X
- Impeller Sizes: 315 ... 1800
- Material of Fan Casing: PP, PE, PVC, PVDF, GRP/FRP, SS
- Casing Size: 200 ... 1250
- Chemical Resistant Centrifugal Fan

Wolter Chemco Chemical Resistant Centrifugal Fan

CHEM xx-xx-xx = Chemco high efficiency chemical resistant centrifugal fan

Role

Wolter Chemco has for many years held a leading position in the design and manufacture of equipment in anti-corrosive and chemical-resistant plastics. The company supplies complete systems as well as individual products for industrial ventilation and noise control, clean-room engineering, electroplating plant, laboratory sinks and vessels, wet scrubbers, chemical storage tanks and purpose-built process installations. This background in plastics fabrication, rather than in sheet-metal fans alone, is the basis of the CHEM series

Experience

Decades of work in thermoplastic and glass-reinforced materials, together with in-house aerodynamic and mechanical design, have produced a complete range of backward-curved, chemical-resistant centrifugal fans. Each size is developed for high total efficiency, stable pressure characteristic and a long service life in aggressive gas streams. The mechanical arrangement is kept simple so that the fan can be maintained in the field, and the selection of casing and impeller materials is made to give a low life-cycle cost rather than the lowest first cost.

Application

CHEM series fans are intended for heavily contaminated extract air: corrosive fumes, acid and alkali vapours, moist process exhaust and aggressive gases that would attack a conventional steel or aluminium fan. They are used on laboratory fume cupboards and teaching benches, hospital and pharmaceutical extract, food and beverage process lines, electronics and semiconductor wet benches, chemical dosing and storage, electroplating and anodising halls, and clean-room make-up or recirculation where the airstream itself is corrosive. The same machines are also used for general building extract and air-conditioning duty where a corrosion-resistant construction is specified.

Quality

Wolter Chemco supplies a single, consistent range of high-efficiency, low-noise backward-curved fans. Casings, impellers, drives and accessories are manufactured to international quality standards; only materials with a documented chemical-resistance record are used in the airstream. Air performance ratings are based on tests conducted in accordance with ANSI/AMCA Standard 210 and rated in accordance with AMCA Publication 211. Impellers are balanced in two planes to ISO 21940-11 / VDI 2060 G2.5 / AMCA 204. The CHEM xx-xx-xx series is licensed to bear the AMCA Certified Ratings Seal for air performance and sound as stated on the seal page of this catalogue.

Products and Performance

The CHEM centrifugal range, together with matching roof fans with horizontal or vertical discharge, covers duties up to 180,000 m³/h (cmh) and static pressures up to 4,000 Pa. Standard airstream materials are polypropylene (PP), polyethylene (PE), polyvinyl chloride (PVC), polyvinylidene fluoride (PVDF) and vinyl-ester glass-reinforced plastic (GRP/FRP). Stainless-steel construction is available where the process requires it. Direct-drive and belt-drive arrangements are offered throughout the size range.

Sound Level

Sound data are presented as A-weighted levels in accordance with ISO 13347-2 or AMCA 311 so that the published figures correspond to the response of the human ear. Curve pages show inlet A-weighted sound power LwA as the blue figures

Standard Models and Designs

Model CHEM 200-315X-317 DD to 400-500-504 DD

- With direct drive
- Injection-moulded plastic casing, PP as standard.
- Dual-rotation casing on a galvanised steel support with flanged motor.
- Impeller overhung on the motor shaft.
- Angle or channel fan base
- Round straight inlet and outlet flange as standard

Model CHEM 200-315X-317 BD to 400-500-504 BD

- With belt drive
- Injection-moulded plastic casing, PP as standard.
- Casing on a galvanised steel support with aluminium-cast, flange-mounted twin bearing housing.
- Impeller overhung on the fan shaft.
- Channel base with motor mounting plate

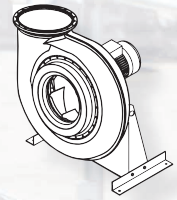

Model CHEM 400-560X-570 DD to CHEM 450-630X-631 DD

- With direct drive
- Injection-moulded plastic casing, PP as standard; other materials on request.
- Casing on a galvanised steel support with flange- or foot-mounted motor.
- Impeller overhung on the motor shaft.
- Channel base

Model CHEM 400-560X-570 BD to CHEM 450-630X-631 BD

- With belt drive.
- Injection-moulded plastic casing, PP as standard; other materials on request.
- Casing on a galvanised steel support frame with pedestal-mounted, self-aligning ball bearings.
- Impeller overhung on the shaft.
- Channel base with motor mounting plate

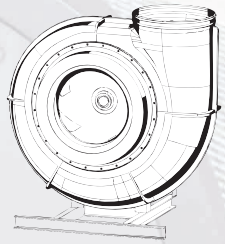

Model CHEM 500-630X-631 DD to CHEM 710-1000X-1000 DD

- With direct drive.
- Mechanically welded thermoplastic or GRP/FRP casing, GRP/FRP as standard.
- Casing on a galvanised steel support with foot-mounted motor.
- Impeller overhung on the motor shaft.
- Channel base

Model CHEM 500-630X-631 BD to CHEM 710-1000X-1000 BD

- With belt drive.
- Mechanically welded thermoplastic or GRP/FRP casing, GRP/FRP as standard.
- Casing on a galvanised steel support frame with pedestal-mounted, self-aligning ball bearings.
- Impeller overhung on shaft.
- Channel base with motor mounting plate

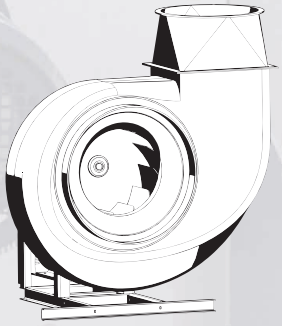

Model CHEM 800-1000X-1000 DD to CHEM 1250-1800X-1800 DD

- With direct drive.
- Mechanically welded thermoplastic or GRP/FRP casing, GRP/FRP as standard.
- Casing on a galvanised steel support with foot-mounted motor.
- Impeller overhung on the shaft of bearing box.
- Channel base

Model CHEM 800-1000X-1000 BD to 1250-1800X-1800 BD

- With belt drive.
- Mechanically welded thermoplastic or GRP/FRP casing, GRP/FRP as standard.
- Casing on a galvanised steel support frame with pedestal-mounted, self-aligning bearing.
- Impeller overhung on the fan shaft.
- Channel base with motor mounting plate

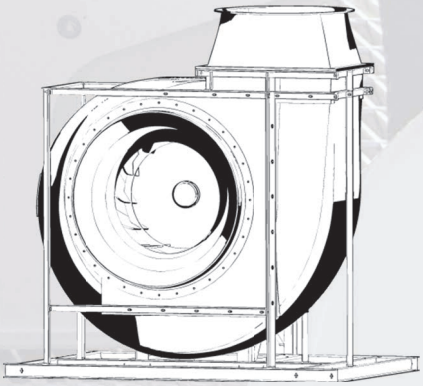

CHEM 200-xx-xx to CHEM 450-560P-570 impeller come with PP as standard. Other material as optional.

CHEM 450-630X-631 to CHEM 1250-1800X-1800 impeller come with GRP/FRP as standard. Other material as optional.

CHEM 500-xx-xx to CHEM 1250-xx-xx fan casing usually of GRP/FRP material, good for chemical resistance, can also be blended with composites to over-coming high temperature, flame retardant, UV or Electrostatic Discharge protection to suit customer's requirements.

Standard Colour

All PP - Black as standard

PANTONE Warm Grey 1C as optional upon request

All GRP - Equivalent to PANTONE 430

Other colours as optional requirement.

Safety Features

All drive-belts, pulleys, projecting set screws, keys and other rotating parts have heavy-duty perforated sheet as protective guards to meet safety requirement. All fans are labelled with nameplate securely attached on each fan showing the serial and model number, fan & drive duties, rotation of flow and date of manufacture.

Chemical Resistant Centrifugal Fan Design

Casing

The volute casing is thermoplastic (PP, PVC, PE, PVDF) or vinyl-ester GRP/FRP, formed as a true volute with a high-efficiency inlet cone so that air is distributed evenly across the impeller.

CHEM 200-xx-xx to 450-xx-xx casings are injection-moulded and suitable for dual rotation. The moulded back plate or inlet cover can be removed to reverse rotation or for maintenance. Outlet connections are either a plain round spigot for a flexible connector or a flanged outlet with a chemical-resistant seal. PP is standard.

CHEM 500-xx-xx to 1250-xx-xx casings are GRP/FRP as standard, or machine-welded thermoplastic when specified.

Casings are stiffened against vibration and drumming. No metal parts lie in the airstream.

A drain may be fitted at the lowest point of the scroll. Inlet and outlet diameters follow the standard size range for flexible connectors. Casings may be compounded for high temperature, flame retardance, ultraviolet or electrostatic-discharge duty.

Impeller

Impellers are single-inlet, single-width (SISW), backward-curved.

- CHEM xx-315-317 to xx-560-570: precision injection-moulded, with a cast-in metal hub.
- CHEM xx-630X-631 to 1250-1800X-1800: mechanically welded.

Standard material is PP on the smaller wheels and GRP/FRP from size 630. PA, PC, PVC, PVDF, GRP or FRP can be specified. Compounds for temperature, flame, UV or ESD duty are available.

Each impeller is balanced in two planes to ISO 21940-11 / VDI 2060 G2.5 / AMCA 204. Hubs take taper bushes.

Fan Base and Support

Supports are heavy-gauge mild steel, hot-dip galvanised. Stainless steel or special finishes are available. Discharge position can be rotated to suit the installation

Drive Shaft and Bearing

Shafts comply with DIN EN 10084, with journal diameters to DIN EN 50347 / BS EN 50347 and keyways to ISO 2491 / ISO 6885. Shafts are chemically protected; stainless steel is optional.

CHEM xx-315-317 to xx-560-570 belt driven fans come with flange mounted aluminium cast bearing housings type. The drive shaft is fitted with two standards antifriction grooved balls bearing unit with acid proof seal. This design ensures trouble-free service, silent operation and minimum vibration.

For CHEM xx-630-631 to CHEM xx-1800-1800, the drive shafts are mounted on fan pedestal with cast iron housing of pillar/plummer block units. These bearings are of self aligning heavy-duty ball or spherical roller type.

Drives

Standard pulley drive with taper bush type, accurately balanced and conform to ISO 4183 standards. All Vee belts are conformed to ISO 4148 Belt section is selected with correct ratings and tensioning to ensure prolonged usage.

Motor

Depending on the application, standard electric driven motor of IP44, IP45, IP54 or IP55 can be supplied upon request.

For direct driven fans, motor are usually of B5 flange mounting and for belt driven fans, motor are of B3 foot mounting. All motors are totally enclosed and fan cooled complying with IEC 60034-1. The motors are single/three phase, 50/60 Hz suitable for 240/415 or 220/380 volts standards. All other voltage can be supplied upon request.

Tropicalisation

Motor windings are coated with resin varnishes, which make the motor suitable for tropical atmospheres. Additional treatment can be carried out where motors are required to operate in severe tropical environments.

Flameproof

Explosion proof fans in direct drive with all sizes are available upon requested.

- The marking of the fan include: Ⓔx II 2 G Ex h IIB+H_2 T1~6 Gb
- Certified according to ATEX guideline 94/9/EC as well as EN 60079-0, EN 1127-1, EN ISO 80079-36, EN ISO 80079-37 and EN 14986
- Applicable in categorie 2, zone 1 and 2
- Ex e increased safety respectively and Ex d = flameproof enclosure
- The fans are applicable for group IIA and IIB and also additional usable for hydrogen.
- Motor protection by cold conductor. Only certifi ed when connected with a motor protection device

For temperature classes T1~T6 the following limits apply when the fan itself is not a certified Ex assembly:

a) Maximum speed reduced by 20%;

b) Allowable shaft power Pw reduced by 30%;

c) Horizontal shaft only;

d) Inlet / outlet guards fitted so that foreign objects cannot fall or be drawn into the impeller.

Inspection View Port

For servicing and inspection purposes. Inspection view port can be included only upon request. This view port should comply in general with safety and accident prevention regulations.

Accessories

- Anti-vibration spring mounting
- Motor, motor guard, slide rails, belt guard, belt drive
- Fan and motor support base frame
- Splinter protection cover.
- Condense water drain socket and plug
- Bearing, bearing and shaft cover
- Inlet flanges, Inlet sleeve with clamping bands
- Motor and Variable Frequency Inverter

Optional

- Full range of colour matching
- High Temperature
- Electrostatic Discharge - Anti-static, Static dissipative or Conductive
- Flame Retardant
- Ultra Violet

Thermal and Chemical resistant

The temperature of the air and gases must not exceed that specified for the materials:

Material	max. Temp. [°C]
PVC	60
PP	80
GRP / FRP	100
PVDF	120

Please contact our local sales engineers for detailed list of Chemical Application Information.

The air performance curves provided in this catalogue were measured according to AMCA 210 (ISO 5801) in an AMCA accreditted test air chamber. The sketch below shows the principle set up of the test chamber.

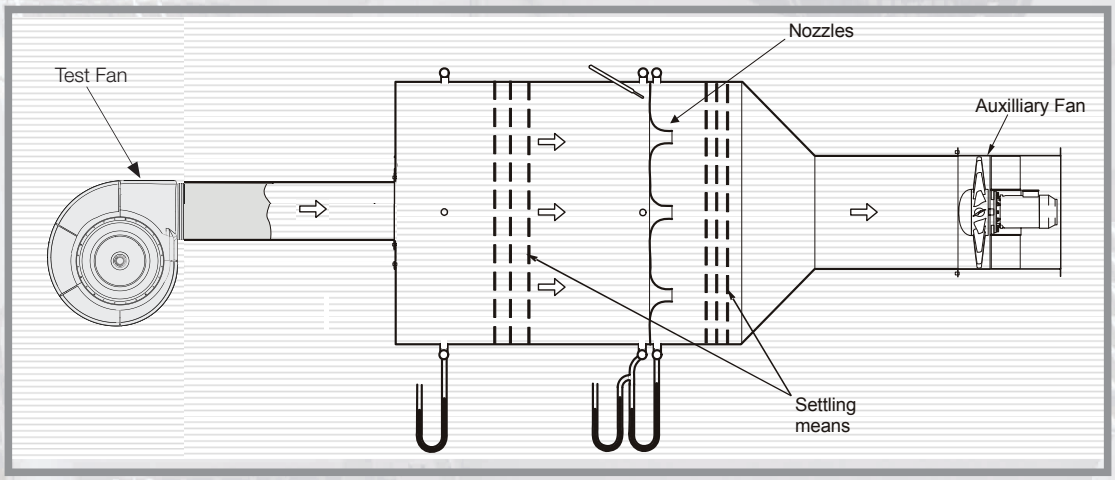

AMCA 210 Figure 12
ISO 5801 Figure 73b

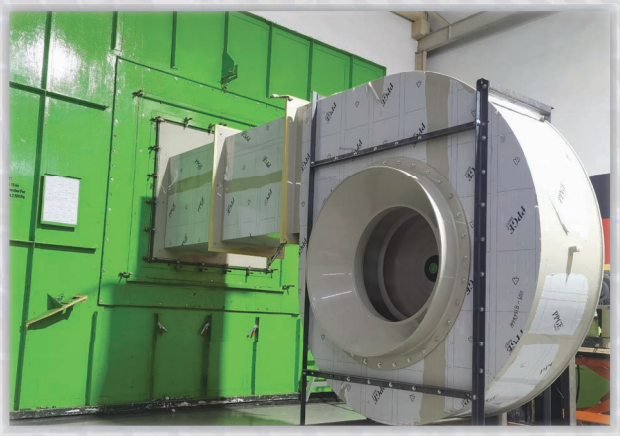

Certified FEGs are determined in accordance with AMCA 205 Energy Efficiency Classification for fans. In conjunction with AMCA 211 Certified Ratings Program, Product Rating Manual for Fan Air Performance. This classification is based on total peak, or optimum, fan efficiency for a given fan speed, impeller diameter and test application category (test configuration). For the purpose of energy classification, the peak efficiency shall be determined at a speed that is lower than the fan's maximum design speed.

The AMCA Certified Ratings Seal applies to the Fan Efficiency Grade (FEG) for CHEM xx-xx-xx series Chemical Resistant Centrifugal Fan model CHEM 200-315X-317 to CHEM 1250-1800X-1800 as shown in the table below.

Model Size No.	Max. Speed [rpm]	Outlet Area [m^2]	Fan Efficiency Grade [FEG]
CHEM 250-315P-317	4800	0.0471	80
CHEM 250-355P-359	4280	0.0471	71
CHEM 315-355P-359	4280	0.0750	80
CHEM 315-400P-403	3800	0.0750	85
CHEM 315-450P-453	3280	0.0750	75
CHEM 400-450P-453	3280	0.1195	85
CHEM 400-500P-504	2910	0.1195	75
CHEM 450-500P-504	2910	0.1605	80
CHEM 450-560P-570	2640	0.1605	75
CHEM 200-315X-317	5300	0.0299	80
CHEM 250-355X-359	4700	0.0471	71
CHEM 315-355X-359	4700	0.0750	85
CHEM 250-400X-403	4200	0.0471	71
CHEM 315-400X-403	4200	0.0750	80
CHEM 315-450X-453	3600	0.0750	71
CHEM 400-450X-453	3600	0.1195	80
CHEM 315-500X-504	3200	0.0750	75
CHEM 400-500X-504	3200	0.1195	75
CHEM 400-560X-570	2900	0.1195	71
CHEM 450-560X-570	2900	0.1605	75

Model Size	Max. Speed [rpm]	Outlet Area [m^2]	Fan Efficiency Grade [FEG]
CHEM 500-630X-631	2500	0.2043	75
CHEM 560-710X-722	2250	0.2552	75
CHEM 630-800X-824	2000	0.3217	75
CHEM 710-900X-912	1750	0.3982	75
CHEM 800-1000X-1000	1600	0.5027	75
CHEM 900-1120X-1120	1450	0.6277	75
CHEM 1000-1250X-1250	1300	0.7854	75
CHEM 1120-1400X-1400	1100	0.9870	75
CHEM 1250-1600X-1600	1000	1.2568	75
CHEM 450-630X-631	2500	0.1605	71
CHEM 500-710X-722	2250	0.2043	71
CHEM 560-800X-824	2000	0.2552	71
CHEM 630-900X-912	1750	0.3217	71
CHEM 710-1000X-1000	1600	0.3982	71
CHEM 800-1120X-1120	1450	0.5027	71
CHEM 900-1250X-1250	1300	0.6277	71
CHEM 1000-1400X-1400	1100	0.7854	71
CHEM 1120-1600X-1600	1000	0.9870	71
CHEM 1250-1800X-1800	850	1.2568	71

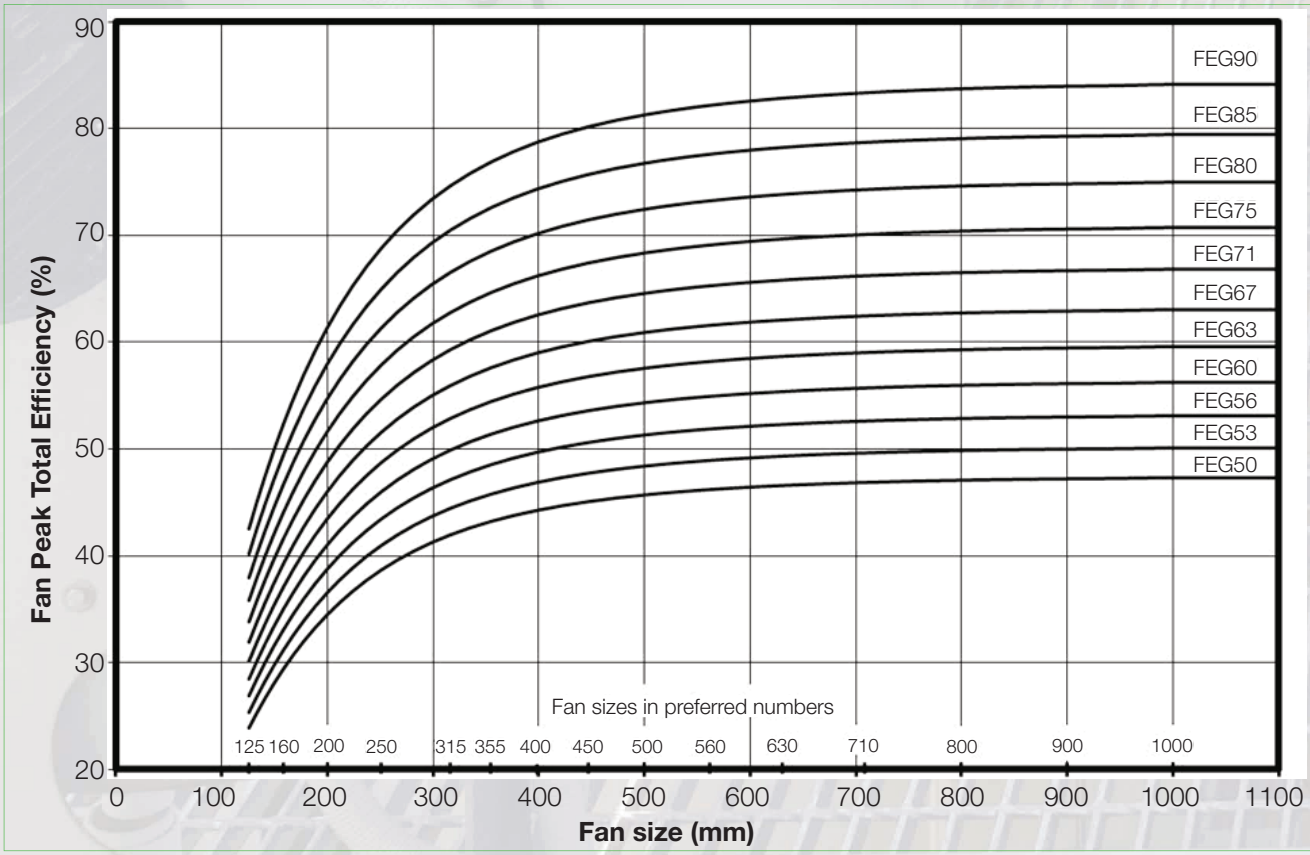

Performance Curve

CHEM 200-315X-317

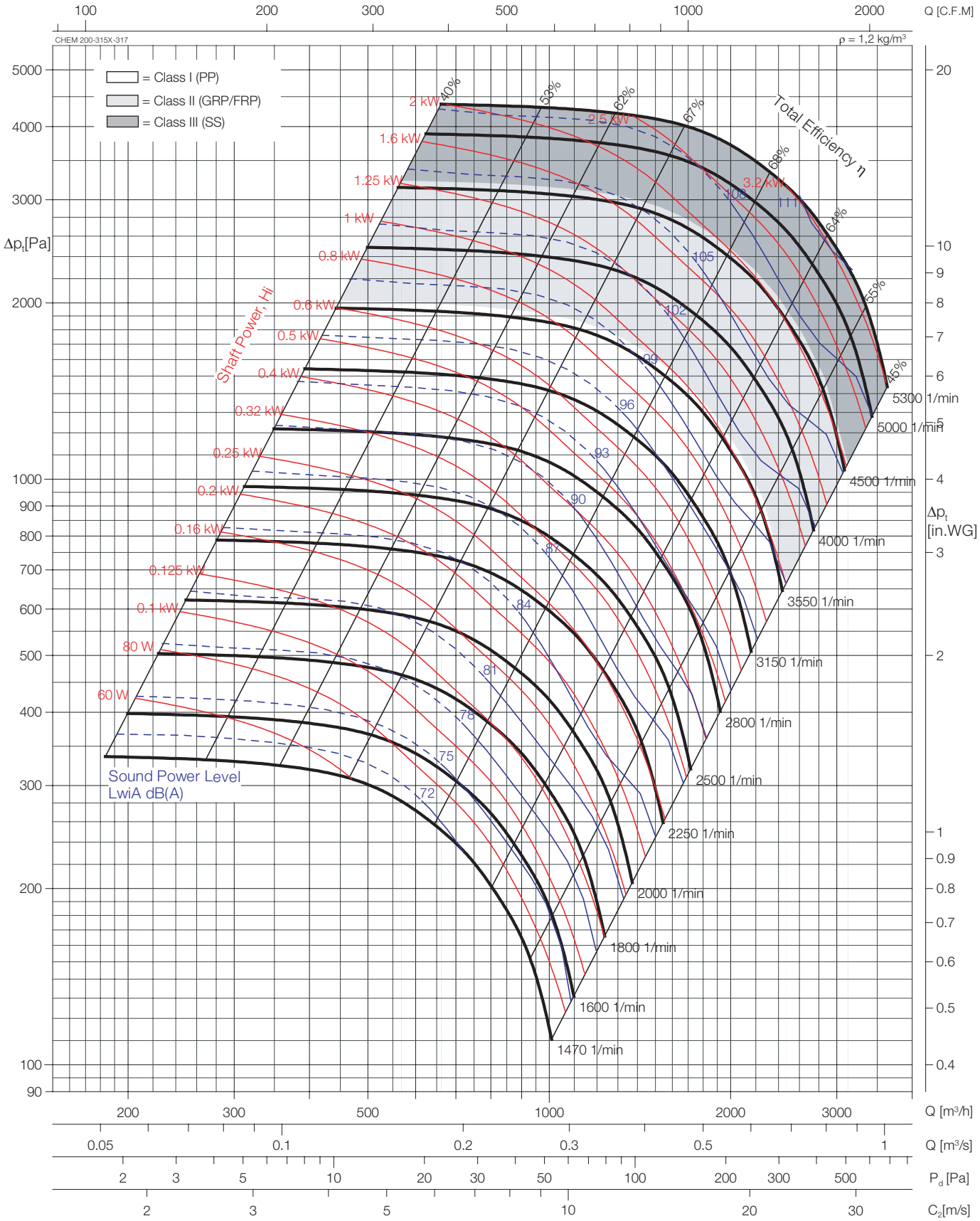

The test data were obtained in a laboratory accredited by AMCA for AMCA Standard 210 and 300.

Transmission type: direct drive and V-belt drive.

Performance certified is for installation type B - Free inlet, Ducted outlet. Power Rating (kW) does not include transmission losses, Performance ratings do not include the effects of accessories.

The A-weighted sound ratings shown have been calculated per AMCA International Standard 301. Values shown are for inlet LwiA sound power levels for installation Type B: free inlet, ducted outlet.

Sound power levels shown as dashed lines are not licensed to bear the AMCA seal.

Impeller diameter	D =	327	mm
Number of blades	z =	6	
Max.Speed Class I (PP)	n_{max} =	3600	1/min
Max.Speed Class II (GRP/FRP)	n_{max} =	4560	1/min
Max.Speed Class III (SS)	n_{max} =	5300	1/min

CHEM 250-315P-317

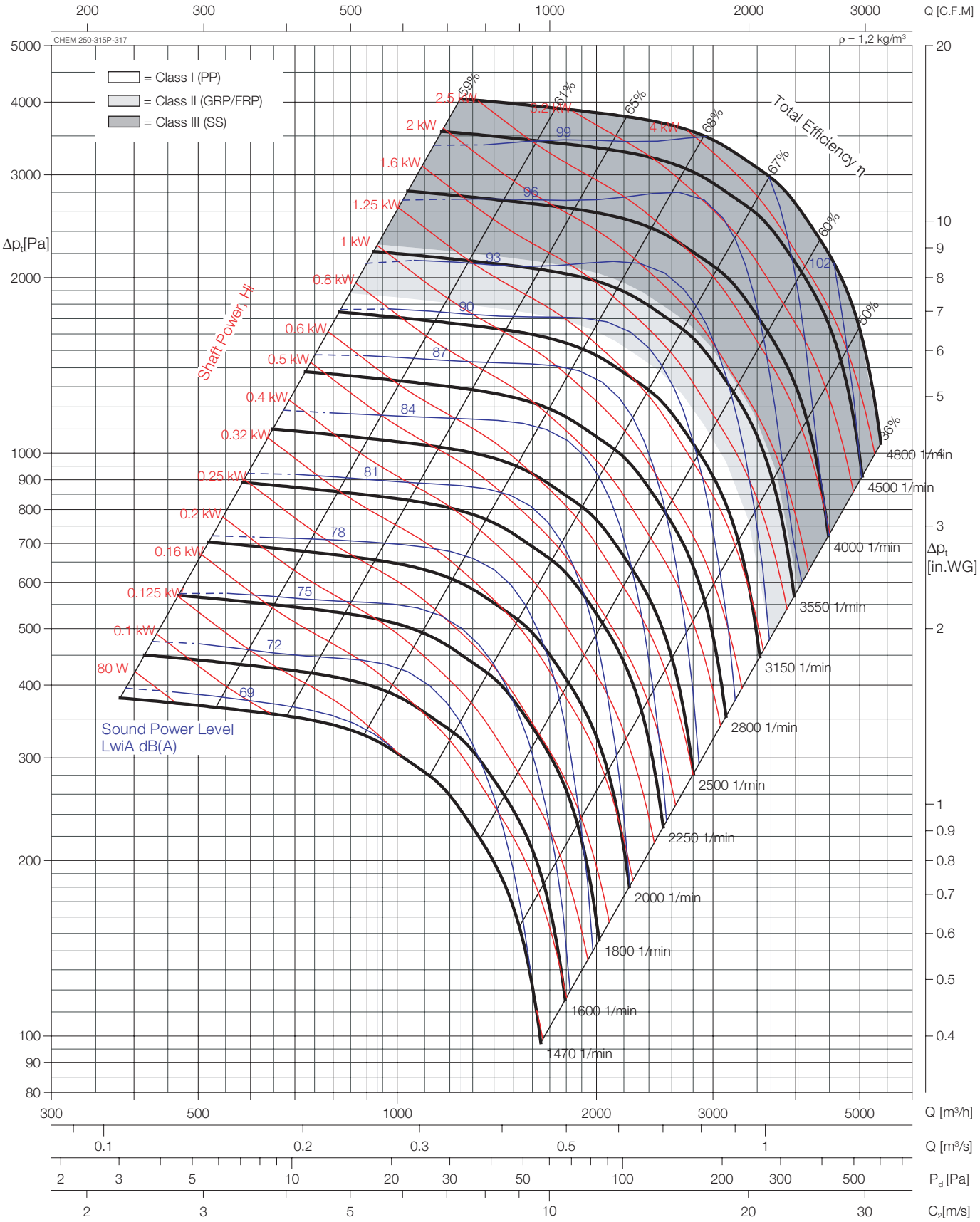

The test data were obtained in a laboratory accredited by AMCA for AMCA Standard 210 and 300.

Transmission type: direct drive and V-belt drive.

Performance certified is for installation type B - Free inlet, Ducted outlet. Power Rating (kW) does not include transmission losses, Performance ratings do not include the effects of accessories.

The A-weighted sound ratings shown have been calculated per AMCA International Standard 301. Values shown are for inlet LwiA sound power levels for installation Type B: free inlet, ducted outlet.

Sound power levels shown as dashed lines are not licensed to bear the AMCA seal.

Impeller diameter	D =	327	mm
Number of blades	z =	6	
Max.Speed Class I (PP)	n_{max} =	3270	1/min
Max.Speed Class II (GRP/FRP)	n_{max} =	4130	1/min
Max.Speed Class III (SS)	n_{max} =	4800	1/min

Performance Curve

CHEM 250-355P-359

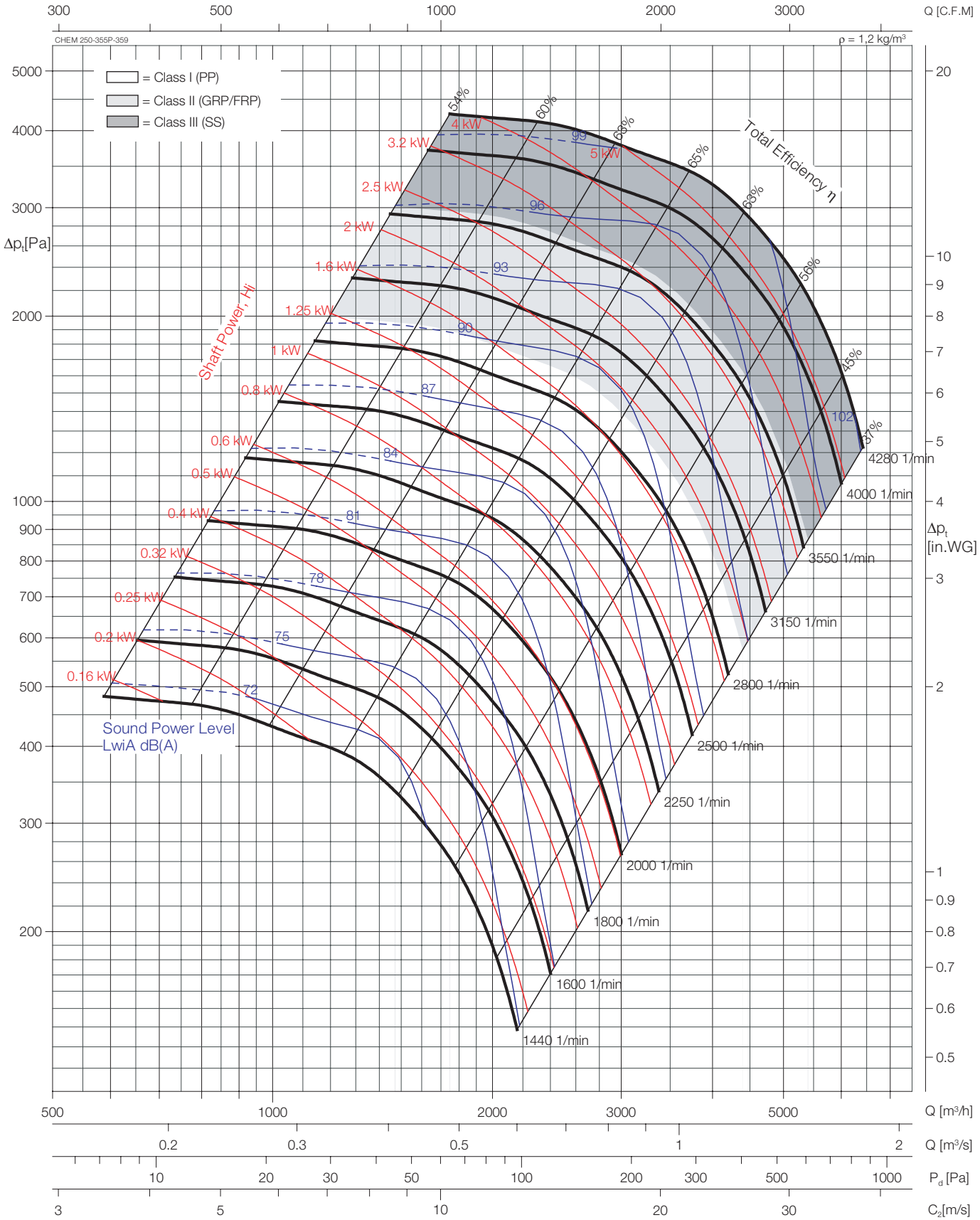

The test data were obtained in a laboratory accredited by AMCA for AMCA Standard 210 and 300.

Transmission type: direct drive and V-belt drive.

Performance certified is for installation type B - Free inlet, Ducted outlet. Power Rating (kW) does not include transmission losses, Performance ratings do not include the effects of accessories.

The A-weighted sound ratings shown have been calculated per AMCA International Standard 301. Values shown are for inlet LwiA sound power levels for installation Type B: free inlet, ducted outlet.

Sound power levels shown as dashed lines are not licensed to bear the AMCA seal.

Impeller diameter	D =	369	mm
Number of blades	z =	6	
Max.Speed Class I (PP)	n_{max} =	2930	1/min
Max.Speed Class II (GRP/FRP)	n_{max} =	3680	1/min
Max.Speed Class III (SS)	n_{max} =	4280	1/min

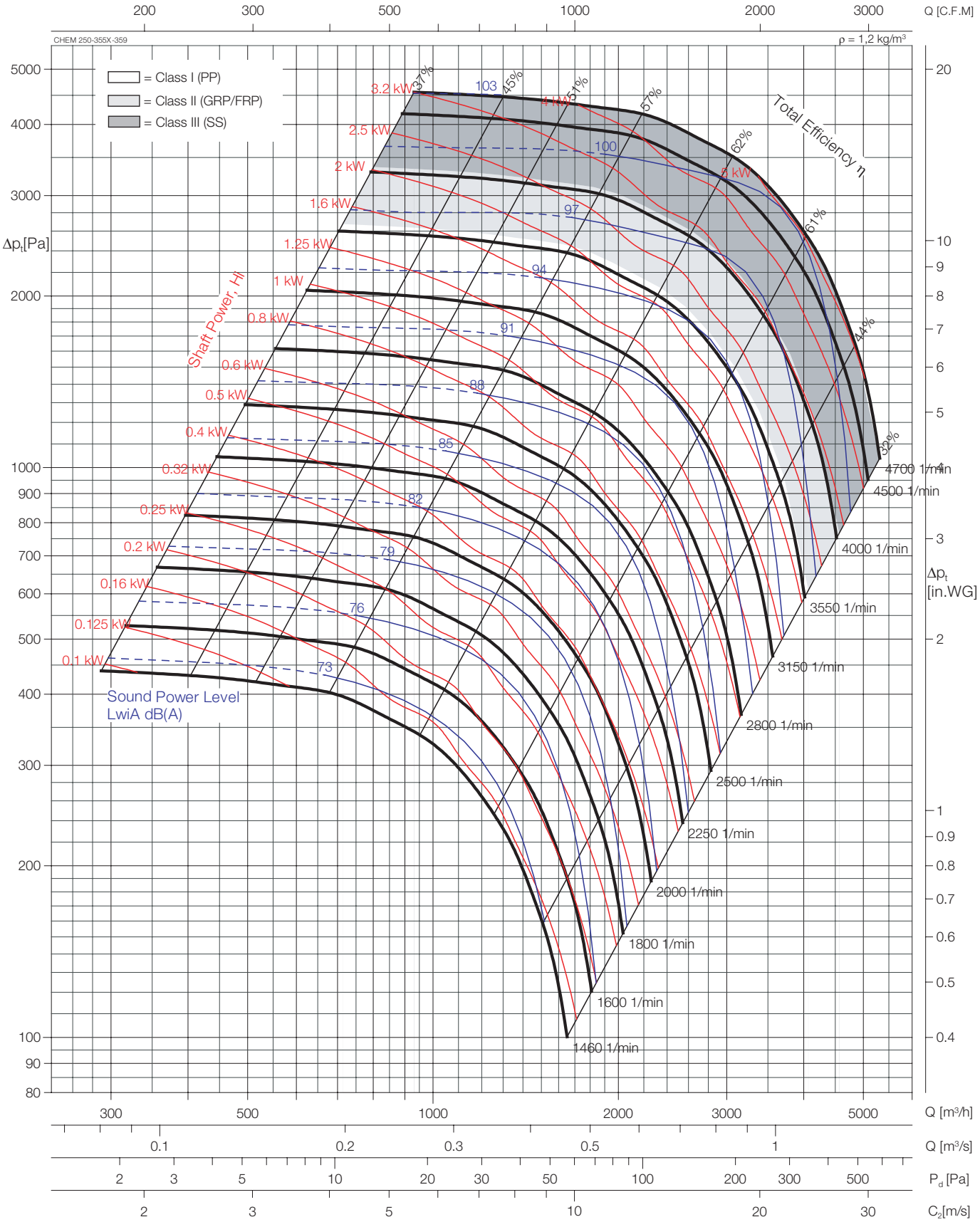

The test data were obtained in a laboratory accredited by AMCA for AMCA Standard 210 and 300.

Transmission type: direct drive and V-belt drive.

Performance certified is for installation type B - Free inlet, Ducted outlet. Power Rating (kW) does not include transmission losses, Performance ratings do not include the effects of accessories.

The A-weighted sound ratings shown have been calculated per AMCA International Standard 301. Values shown are for inlet LwiA sound power levels for installation Type B: free inlet, ducted outlet.

Sound power levels shown as dashed lines are not licensed to bear the AMCA seal.

Impeller diameter	D =	369	mm
Number of blades	z =	6	
Max.Speed Class I (PP)	n_{max} =	3600	1/min
Max.Speed Class II (GRP/FRP)	n_{max} =	4040	1/min
Max.Speed Class III (SS)	n_{max} =	4700	1/min

Performance Curve

CHEM 250-400X-403

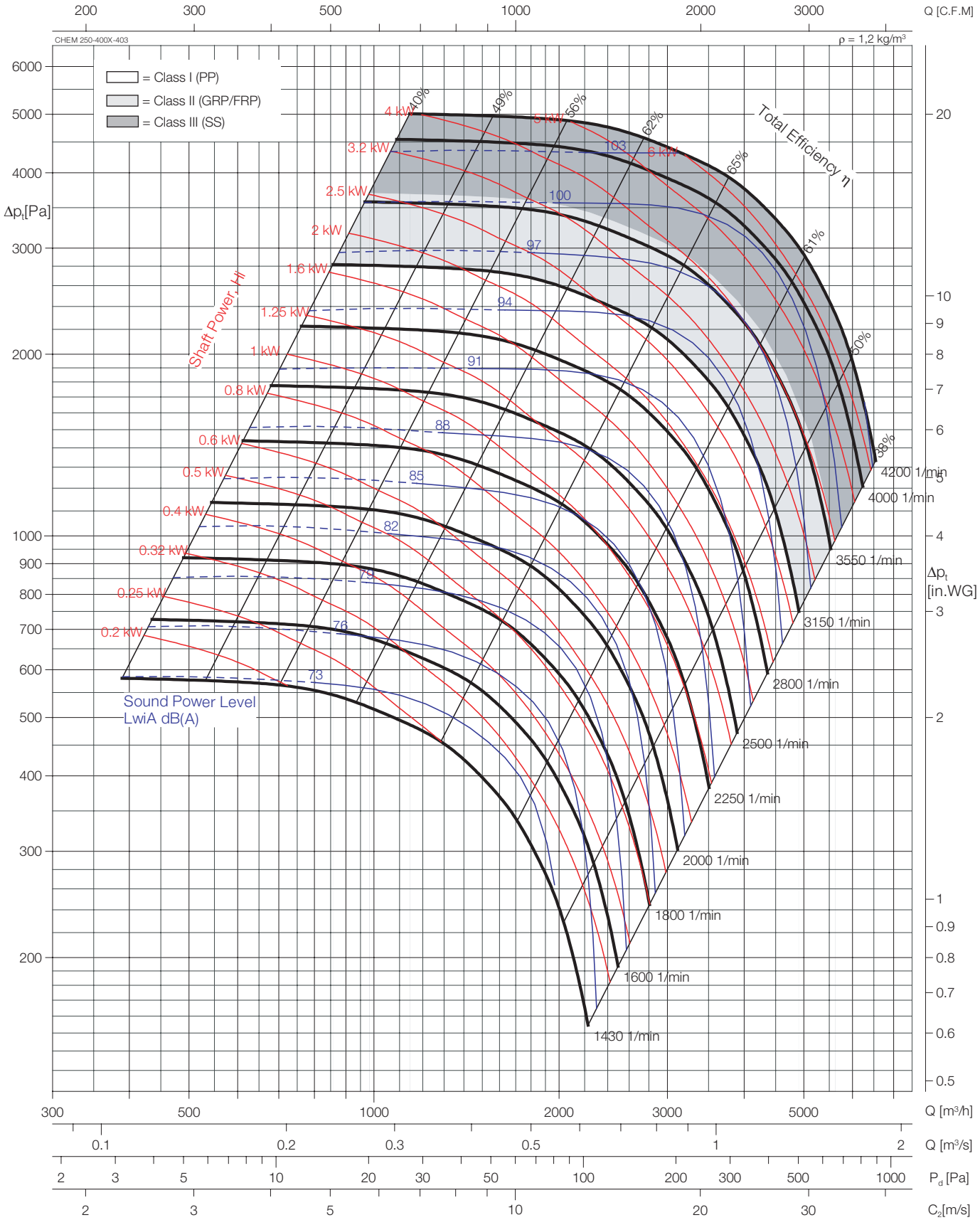

The test data were obtained in a laboratory accredited by AMCA for AMCA Standard 210 and 300.

Transmission type: direct drive and V-belt drive.

Performance certified is for installation type B - Free inlet, Ducted outlet. Power Rating (kW) does not include transmission losses, Performance ratings do not include the effects of accessories.

The A-weighted sound ratings shown have been calculated per AMCA International Standard 301. Values shown are for inlet LwiA sound power levels for installation Type B: free inlet, ducted outlet.

Sound power levels shown as dashed lines are not licensed to bear the AMCA seal.

Impeller diameter	D =	417	mm
Number of blades	z =	6	
Max.Speed Class I (PP)	n_{max} =	3150	1/min
Max.Speed Class II (GRP/FRP)	n_{max} =	3610	1/min
Max.Speed Class III (SS)	n_{max} =	4200	1/min

CHEM 315-355P-359

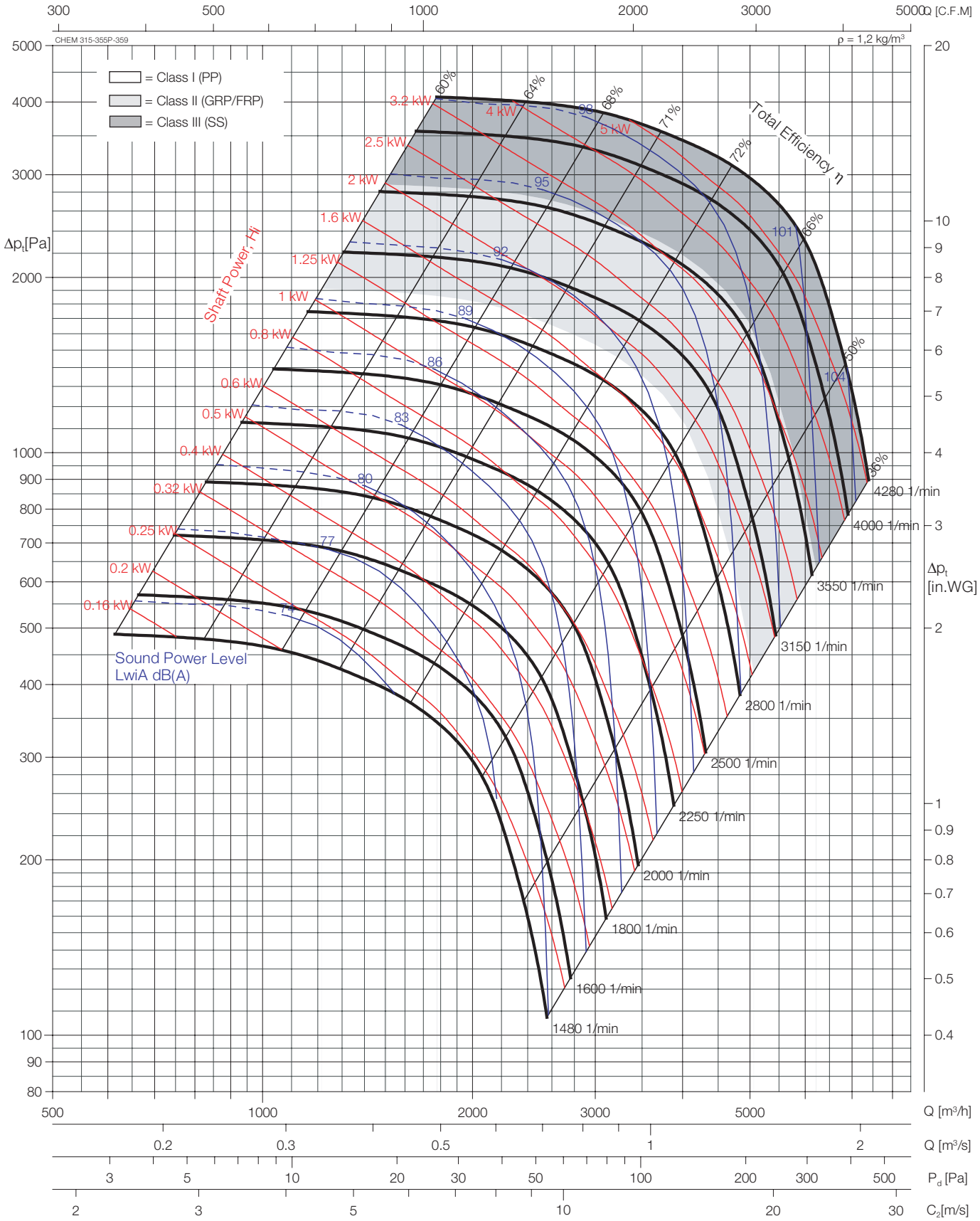

The test data were obtained in a laboratory accredited by AMCA for AMCA Standard 210 and 300.

Transmission type: direct drive and V-belt drive.

Performance certified is for installation type B - Free inlet, Ducted outlet. Power Rating (kW) does not include transmission losses, Performance ratings do not include the effects of accessories.

The A-weighted sound ratings shown have been calculated per AMCA International Standard 301. Values shown are for inlet LwiA sound power levels for installation Type B: free inlet, ducted outlet.

Sound power levels shown as dashed lines are not licensed to bear the AMCA seal.

Impeller diameter	D =	369	mm
Number of blades	z =	6	
Max.Speed Class I (PP)	n_{max} =	2930	1/min
Max.Speed Class II (GRP/FRP)	n_{max} =	3680	1/min
Max.Speed Class III (SS)	n_{max} =	4280	1/min

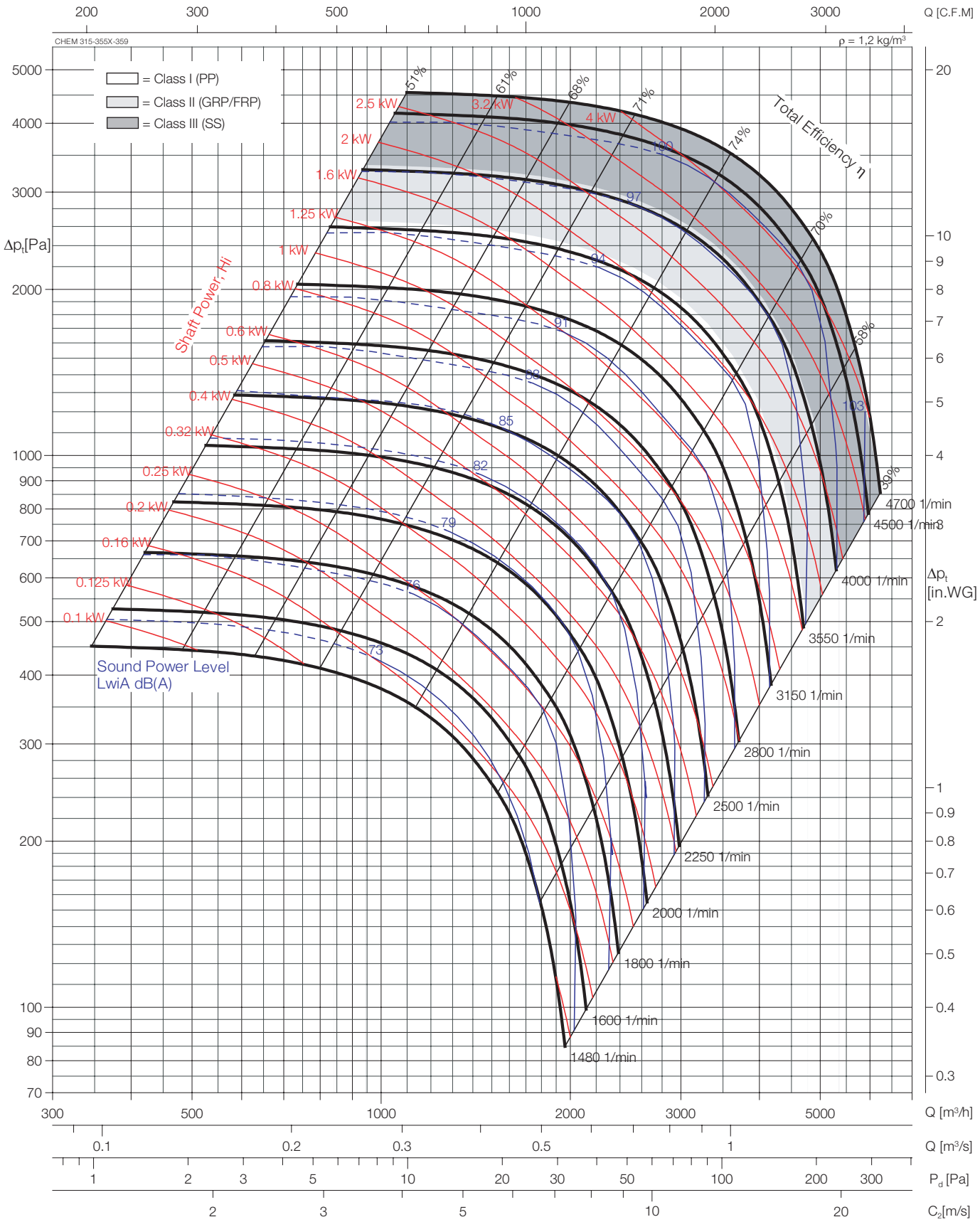

The test data were obtained in a laboratory accredited by AMCA for AMCA Standard 210 and 300.

Transmission type: direct drive and V-belt drive.

Performance certified is for installation type B - Free inlet, Ducted outlet. Power Rating (kW) does not include transmission losses, Performance ratings do not include the effects of accessories.

The A-weighted sound ratings shown have been calculated per AMCA International Standard 301. Values shown are for inlet LwiA sound power levels for installation Type B: free inlet, ducted outlet.

Sound power levels shown as dashed lines are not licensed to bear the AMCA seal.

Impeller diameter	D =	369	mm
Number of blades	z =	6	
Max.Speed Class I (PP)	n_{max} =	3600	1/min
Max.Speed Class II (GRP/FRP)	n_{max} =	4040	1/min
Max.Speed Class III (SS)	n_{max} =	4700	1/min

CHEM 315-400P-403

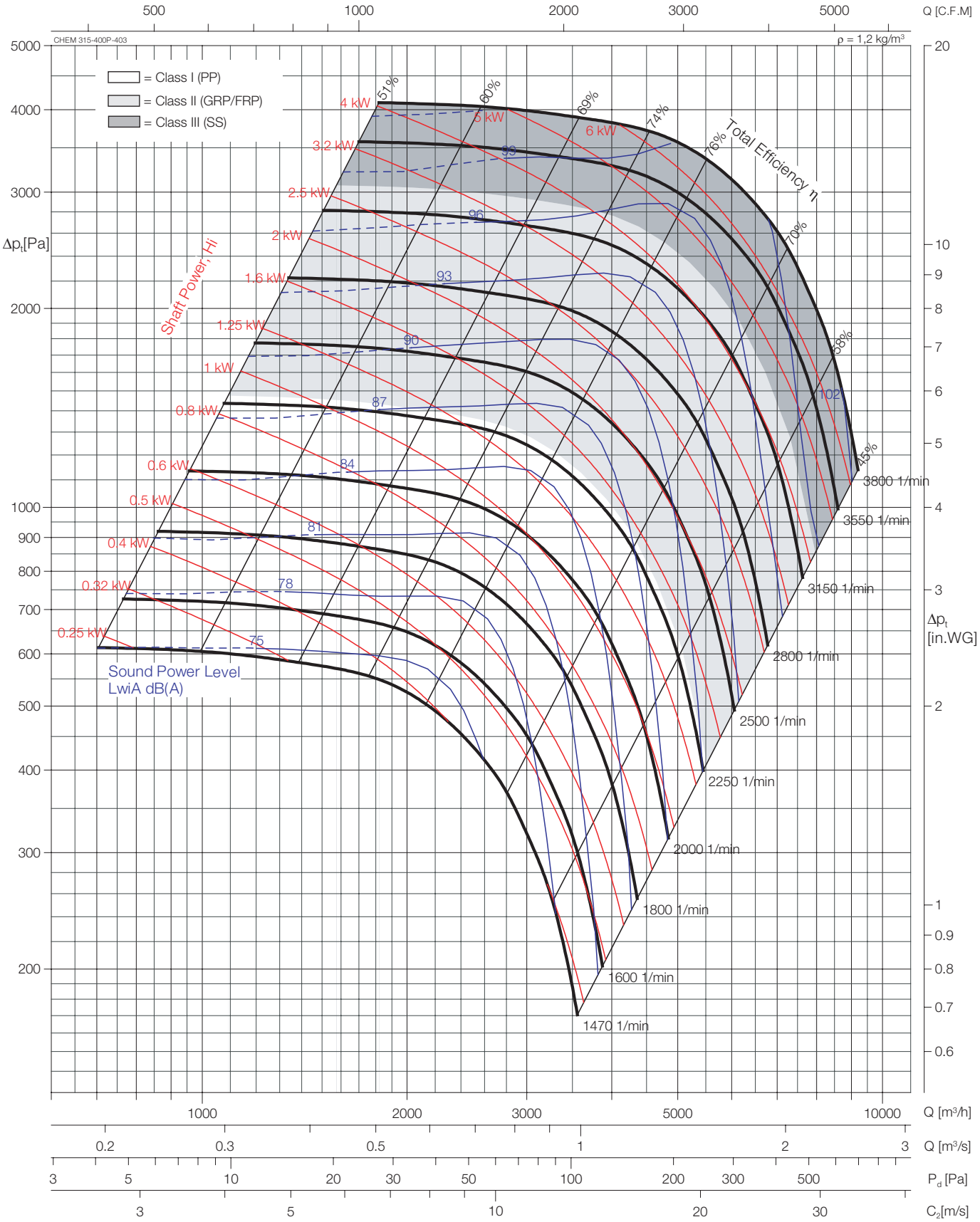

The test data were obtained in a laboratory accredited by AMCA for AMCA Standard 210 and 300.

Transmission type: direct drive and V-belt drive.

Performance certified is for installation type B - Free inlet, Ducted outlet. Power Rating (kW) does not include transmission losses, Performance ratings do not include the effects of accessories.

The A-weighted sound ratings shown have been calculated per AMCA International Standard 301. Values shown are for inlet LwiA sound power levels for installation Type B: free inlet, ducted outlet.

Sound power levels shown as dashed lines are not licensed to bear the AMCA seal.

Impeller diameter	D =	417	mm
Number of blades	z =	6	
Max.Speed Class I (PP)	n_{max} =	2280	1/min
Max.Speed Class II (GRP/FRP)	n_{max} =	3270	1/min
Max.Speed Class III (SS)	n_{max} =	3800	1/min

Performance Curve

CHEM 315-400X-403

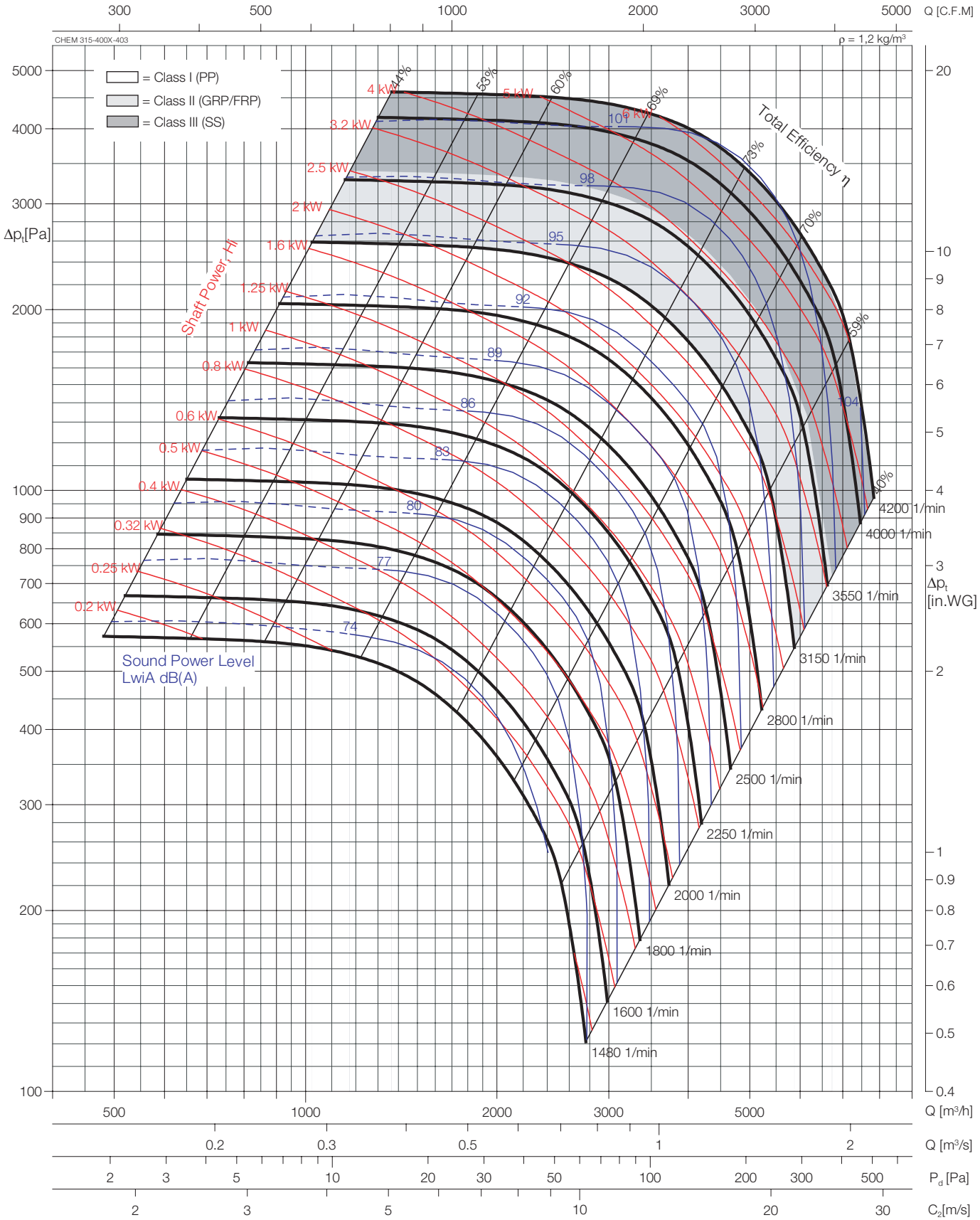

The test data were obtained in a laboratory accredited by AMCA for AMCA Standard 210 and 300.

Transmission type: direct drive and V-belt drive.

Performance certified is for installation type B - Free inlet, Ducted outlet. Power Rating (kW) does not include transmission losses, Performance ratings do not include the effects of accessories.

The A-weighted sound ratings shown have been calculated per AMCA International Standard 301. Values shown are for inlet LwiA sound power levels for installation Type B: free inlet, ducted outlet.

Sound power levels shown as dashed lines are not licensed to bear the AMCA seal.

Impeller diameter	D =	417	mm
Number of blades	z =	6	
Max.Speed Class I (PP)	n_{max} =	3150	1/min
Max.Speed Class II (GRP/FRP)	n_{max} =	3610	1/min
Max.Speed Class III (SS)	n_{max} =	4200	1/min

CHEM 315-450P-453

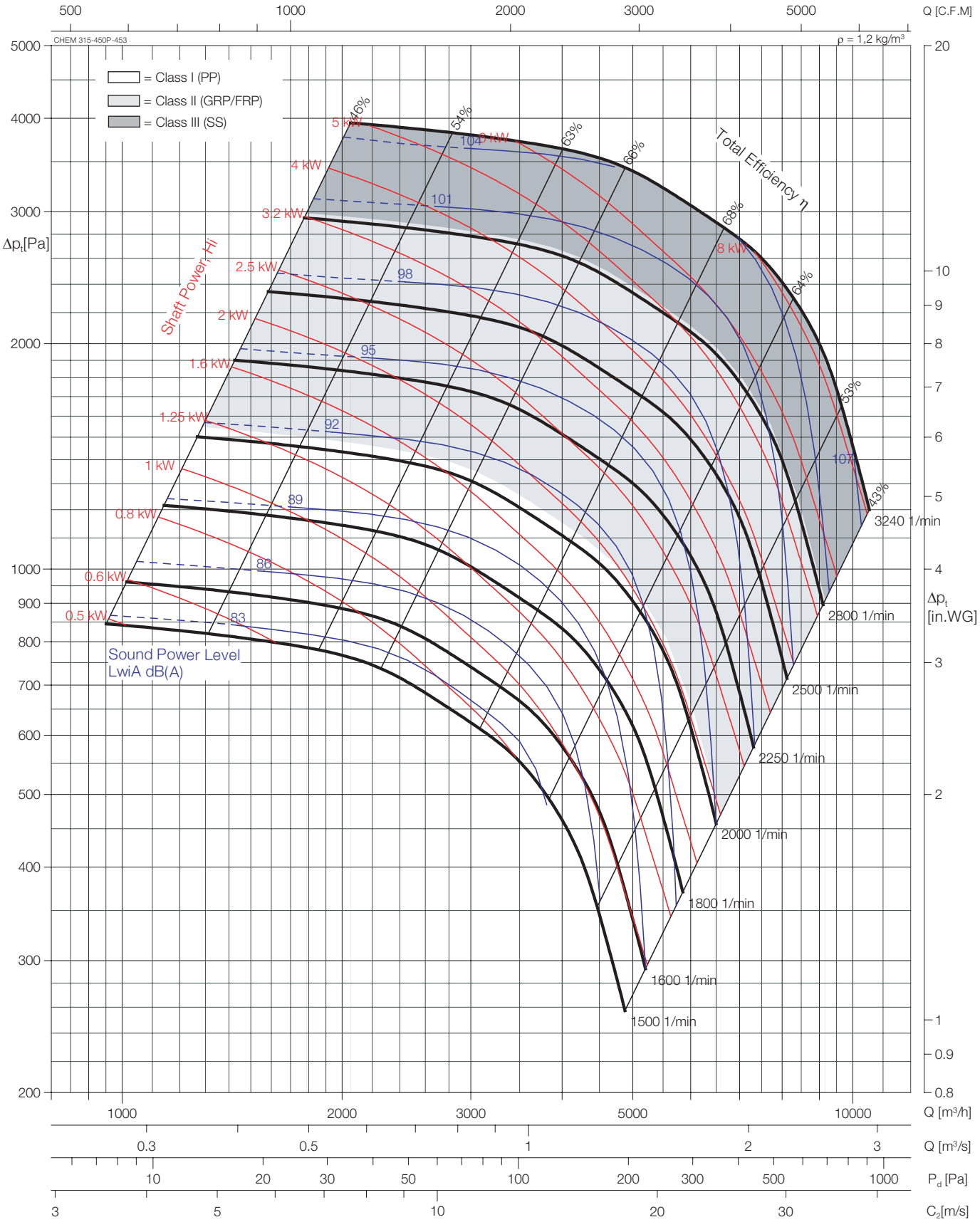

The test data were obtained in a laboratory accredited by AMCA for AMCA Standard 210 and 300.

Transmission type: direct drive and V-belt drive.

Performance certified is for installation type B - Free inlet, Ducted outlet. Power Rating (kW) does not include transmission losses, Performance ratings do not include the effects of accessories.

The A-weighted sound ratings shown have been calculated per AMCA International Standard 301. Values shown are for inlet LwiA sound power levels for installation Type B: free inlet, ducted outlet.

Sound power levels shown as dashed lines are not licensed to bear the AMCA seal.

Impeller diameter	D =	468	mm
Number of blades	z =	6	
Max.Speed Class I (PP)	n_{max} =	2030	1/min
Max.Speed Class II (GRP/FRP)	n_{max} =	2820	1/min
Max.Speed Class III (SS)	n_{max} =	3280	1/min

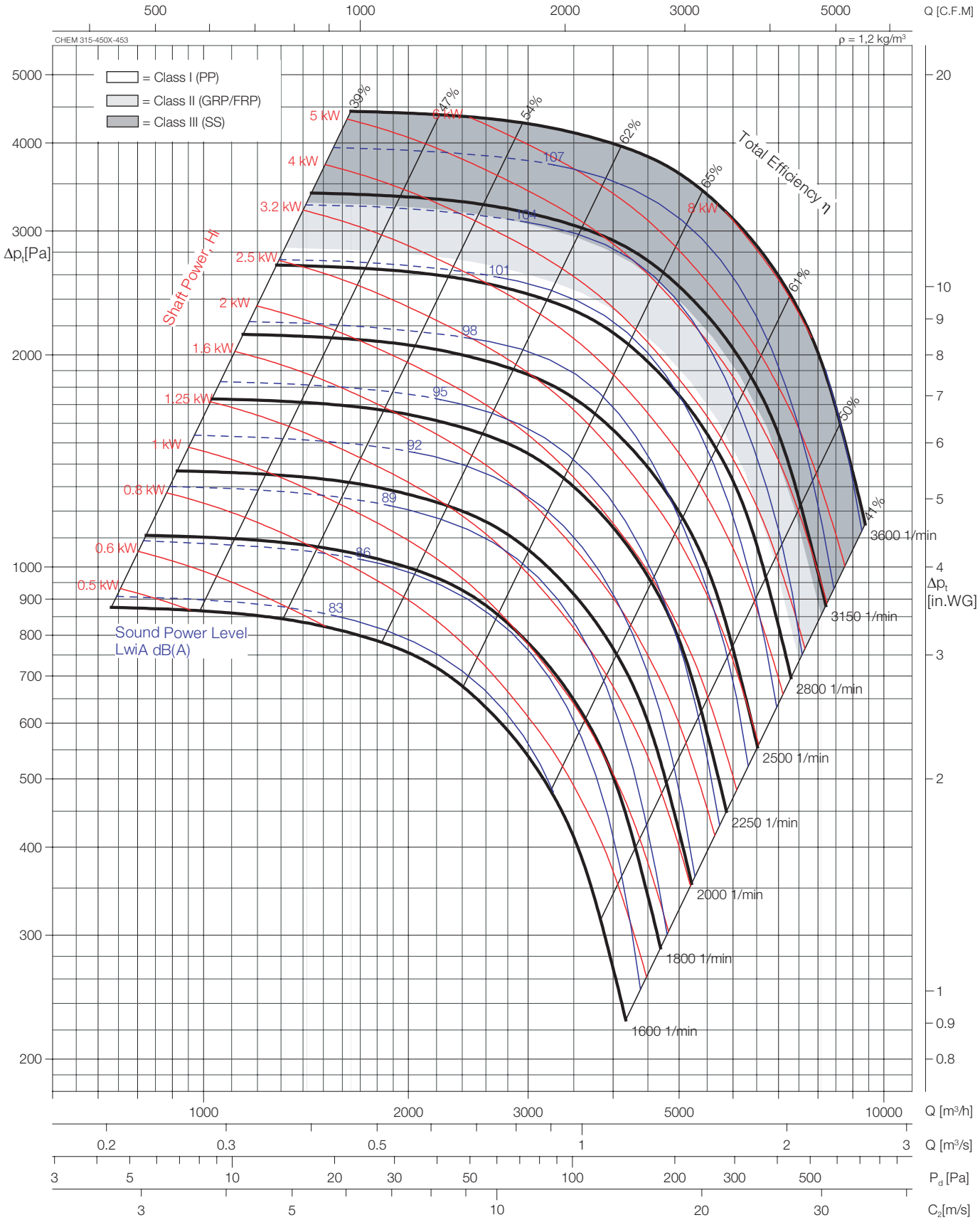

The test data were obtained in a laboratory accredited by AMCA for AMCA Standard 210 and 300.

Transmission type: direct drive and V-belt drive.

Performance certified is for installation type B - Free inlet, Ducted outlet. Power Rating (kW) does not include transmission losses, Performance ratings do not include the effects of accessories.

The A-weighted sound ratings shown have been calculated per AMCA International Standard 301. Values shown are for inlet LwiA sound power levels for installation Type B: free inlet, ducted outlet.

Sound power levels shown as dashed lines are not licensed to bear the AMCA seal.

Impeller diameter	D =	468	mm
Number of blades	z =	6	
Max.Speed Class I (PP)	n_{max} =	2880	1/min
Max.Speed Class II (GRP/FRP)	n_{max} =	3100	1/min
Max.Speed Class III (SS)	n_{max} =	3600	1/min

CHEM 315-500X-504

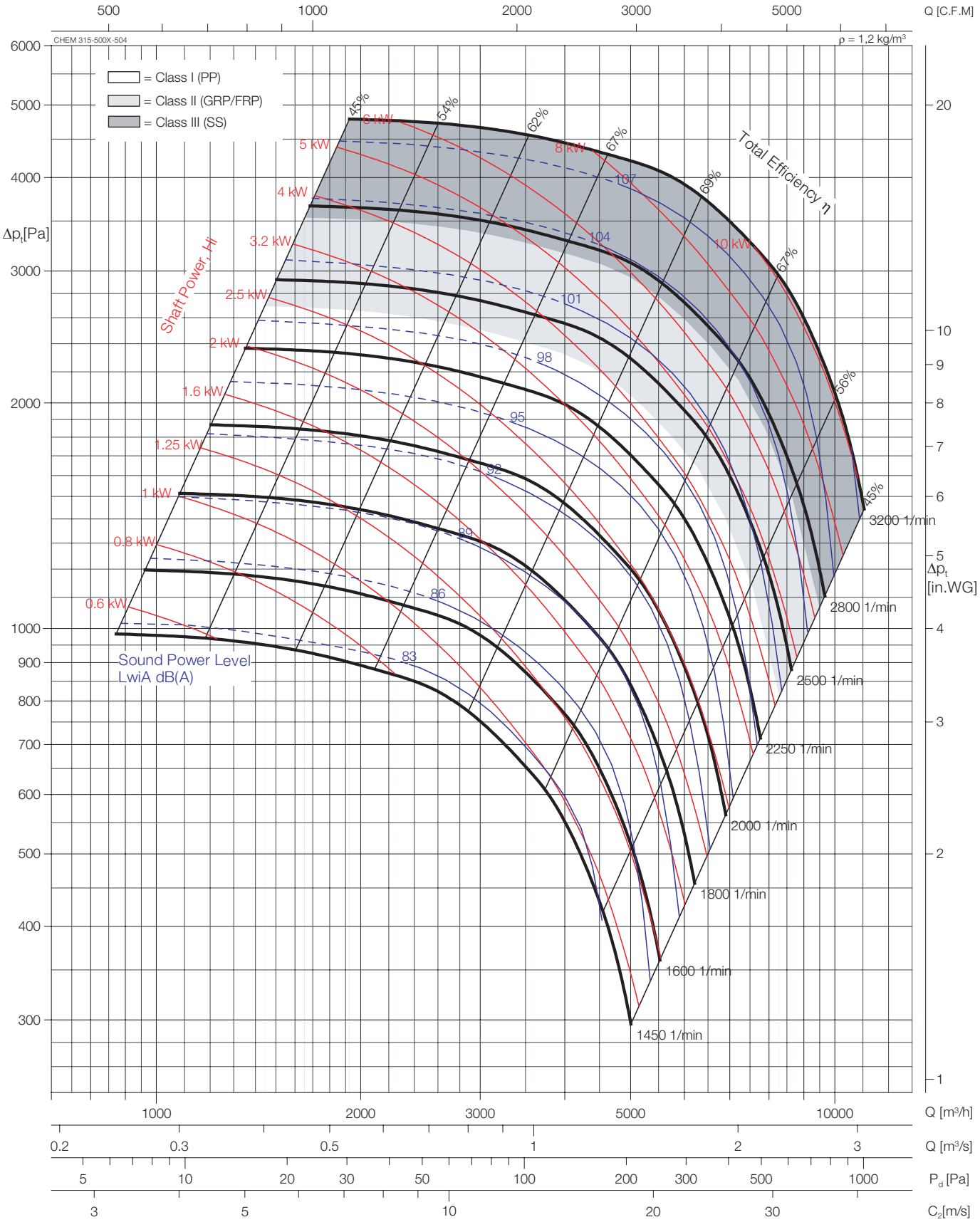

The test data were obtained in a laboratory accredited by AMCA for AMCA Standard 210 and 300.

Transmission type: direct drive and V-belt drive.

Performance certified is for installation type B - Free inlet, Ducted outlet. Power Rating (kW) does not include transmission losses, Performance ratings do not include the effects of accessories.

The A-weighted sound ratings shown have been calculated per AMCA International Standard 301. Values shown are for inlet LwiA sound power levels for installation Type B: free inlet, ducted outlet.

Sound power levels shown as dashed lines are not licensed to bear the AMCA seal.

Impeller diameter	D =	520	mm
Number of blades	z =	6	
Max.Speed Class I (PP)	n_{max} =	2400	1/min
Max.Speed Class II (GRP/FRP)	n_{max} =	2750	1/min
Max.Speed Class III (SS)	n_{max} =	3200	1/min

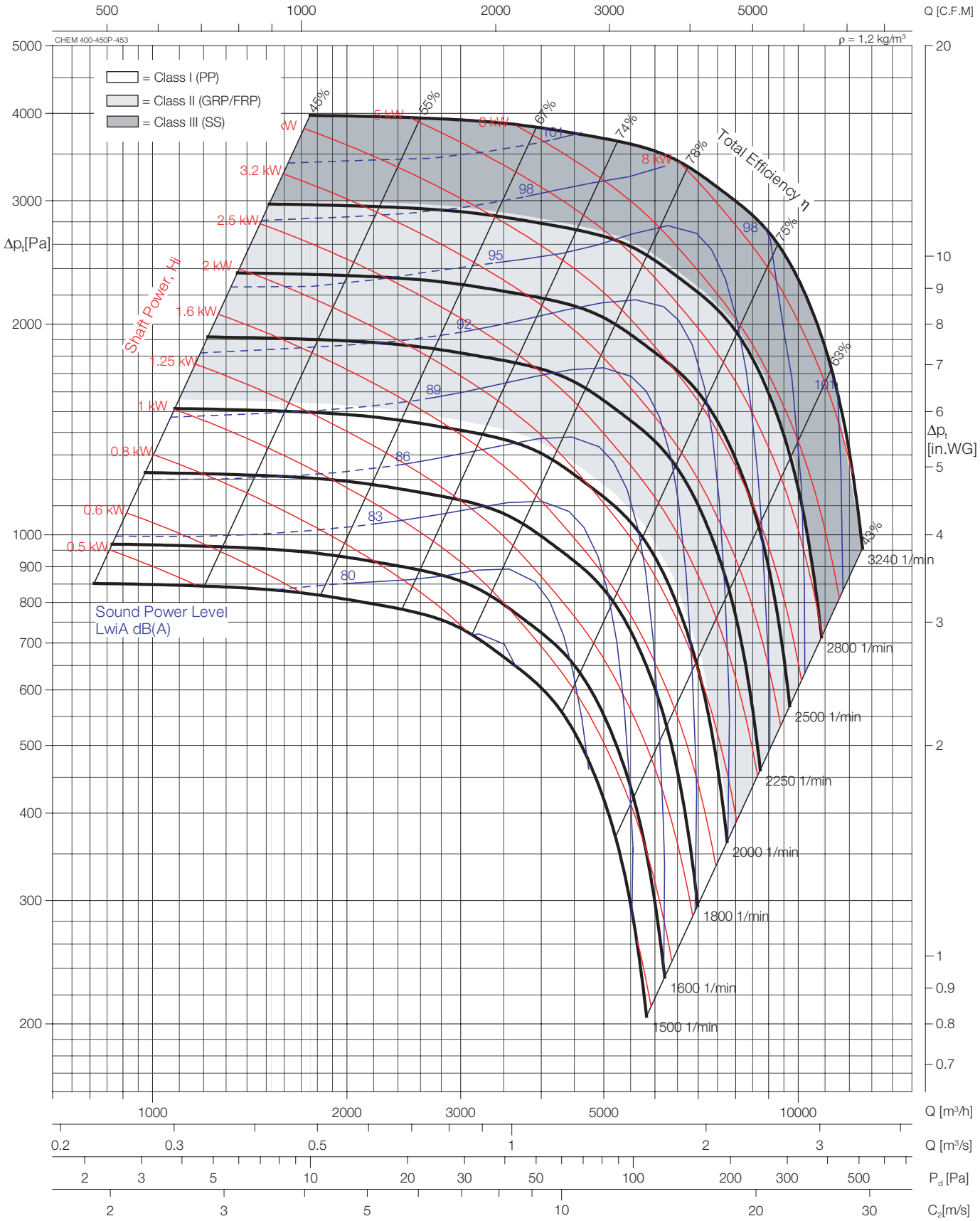

The test data were obtained in a laboratory accredited by AMCA for AMCA Standard 210 and 300.

Transmission type: direct drive and V-belt drive.

Performance certified is for installation type B - Free inlet, Ducted outlet. Power Rating (kW) does not include transmission losses, Performance ratings do not include the effects of accessories.

The A-weighted sound ratings shown have been calculated per AMCA International Standard 301. Values shown are for inlet LwiA sound power levels for installation Type B: free inlet, ducted outlet.

Sound power levels shown as dashed lines are not licensed to bear the AMCA seal.

Impeller diameter	D =	468	mm
Number of blades	z =	6	
Max.Speed Class I (PP)	n_{max} =	2030	1/min
Max.Speed Class II (GRP/FRP)	n_{max} =	2820	1/min
Max.Speed Class III (SS)	n_{max} =	3280	1/min

CHEM 400-450X-453

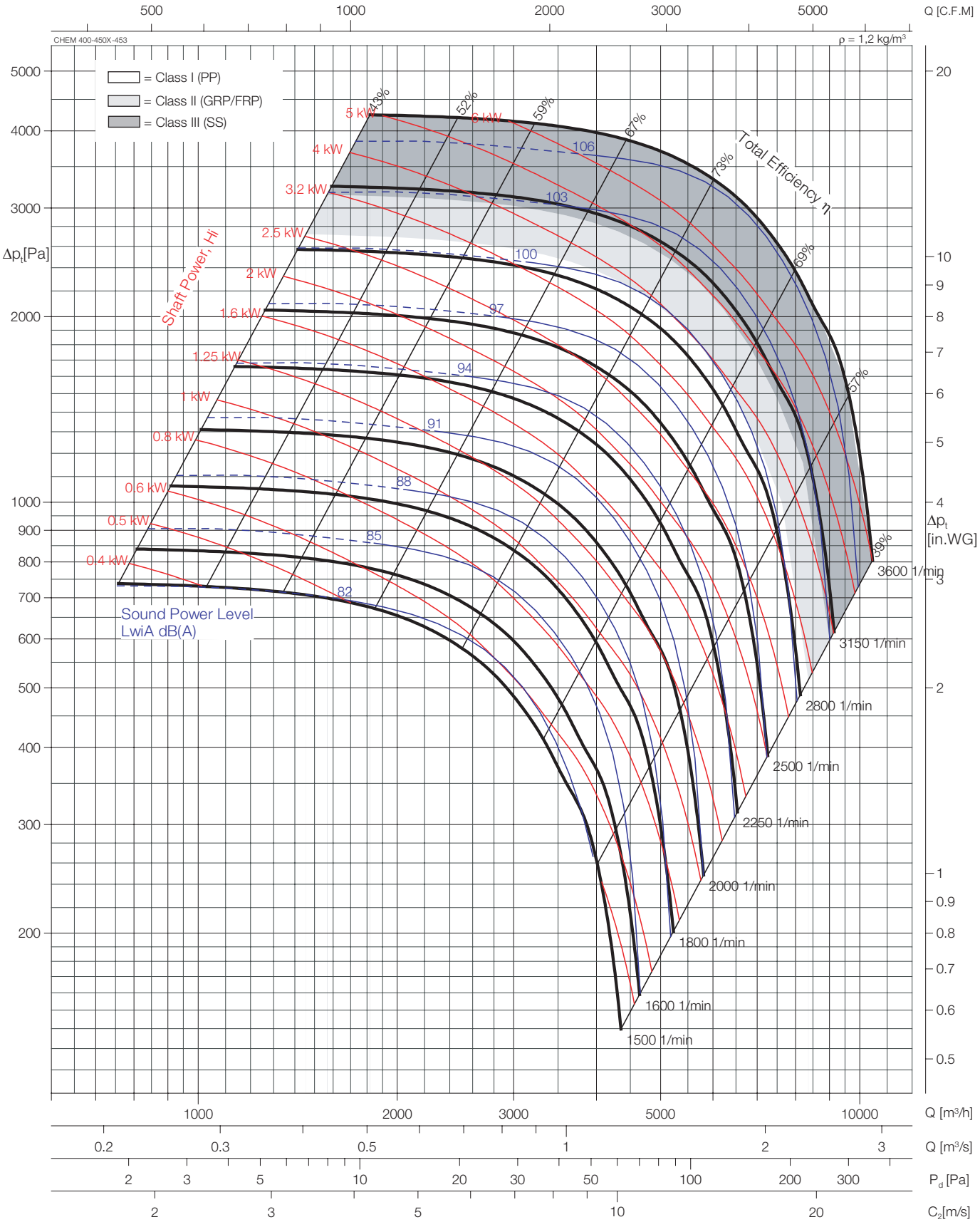

The test data were obtained in a laboratory accredited by AMCA for AMCA Standard 210 and 300.

Transmission type: direct drive and V-belt drive.

Performance certified is for installation type B - Free inlet, Ducted outlet. Power Rating (kW) does not include transmission losses, Performance ratings do not include the effects of accessories.

The A-weighted sound ratings shown have been calculated per AMCA International Standard 301. Values shown are for inlet LwiA sound power levels for installation Type B: free inlet, ducted outlet.

Sound power levels shown as dashed lines are not licensed to bear the AMCA seal.

Impeller diameter	D =	468	mm
Number of blades	z =	6	
Max.Speed Class I (PP)	n_{max} =	2880	1/min
Max.Speed Class II (GRP/FRP)	n_{max} =	3100	1/min
Max.Speed Class III (SS)	n_{max} =	3600	1/min

Performance Curve

CHEM 400-500P-504

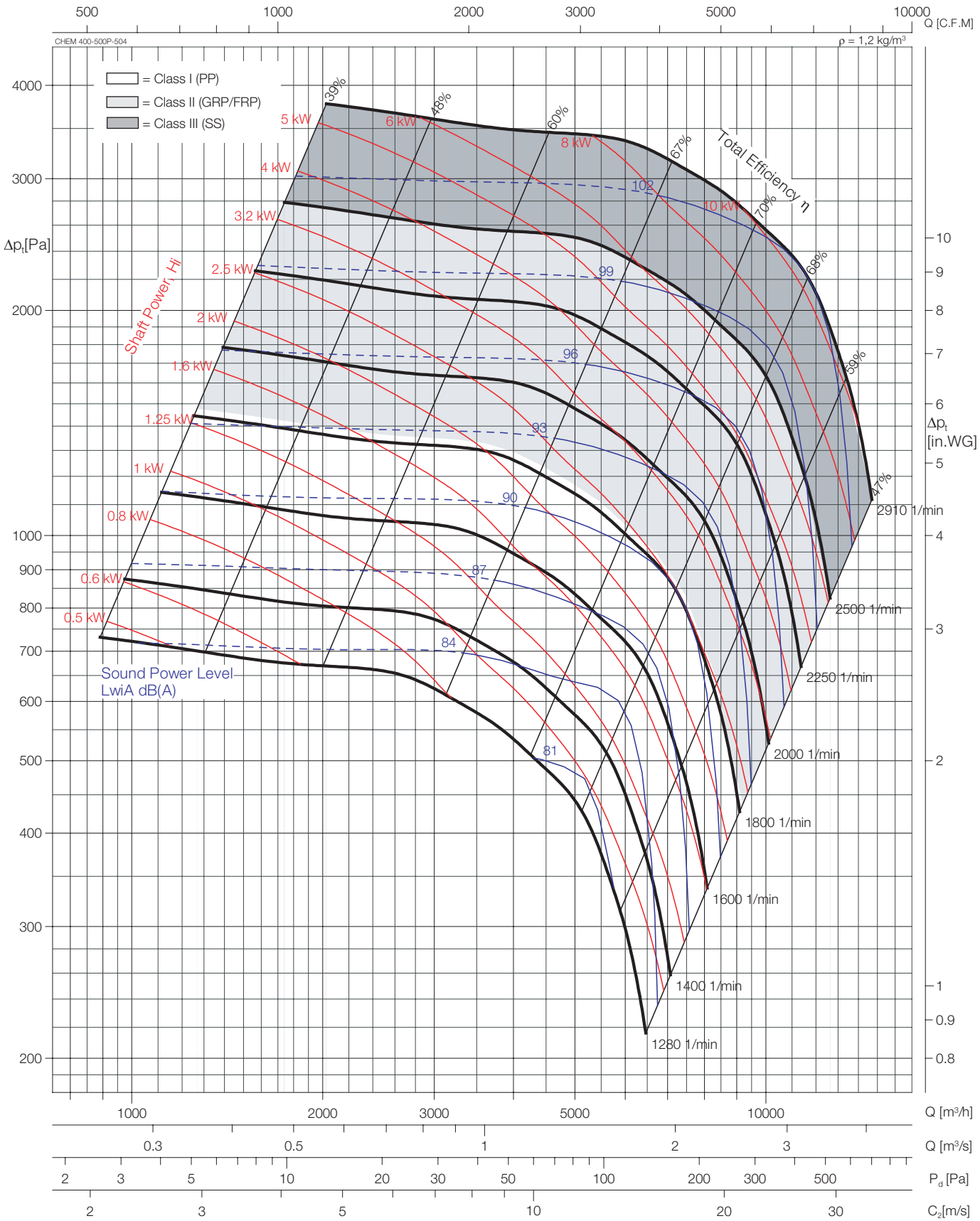

The test data were obtained in a laboratory accredited by AMCA for AMCA Standard 210 and 300.

Transmission type: direct drive and V-belt drive.

Performance certified is for installation type B - Free inlet, Ducted outlet. Power Rating (kW) does not include transmission losses, Performance ratings do not include the effects of accessories.

The A-weighted sound ratings shown have been calculated per AMCA International Standard 301. Values shown are for inlet LwiA sound power levels for installation Type B: free inlet, ducted outlet.

Sound power levels shown as dashed lines are not licensed to bear the AMCA seal.

Impeller diameter	D =	520	mm
Number of blades	z =	6	
Max.Speed Class I (PP)	n_{max} =	1820	1/min
Max.Speed Class II (GRP/FRP)	n_{max} =	2500	1/min
Max.Speed Class III (SS)	n_{max} =	2910	1/min

CHEM 400-500X-504

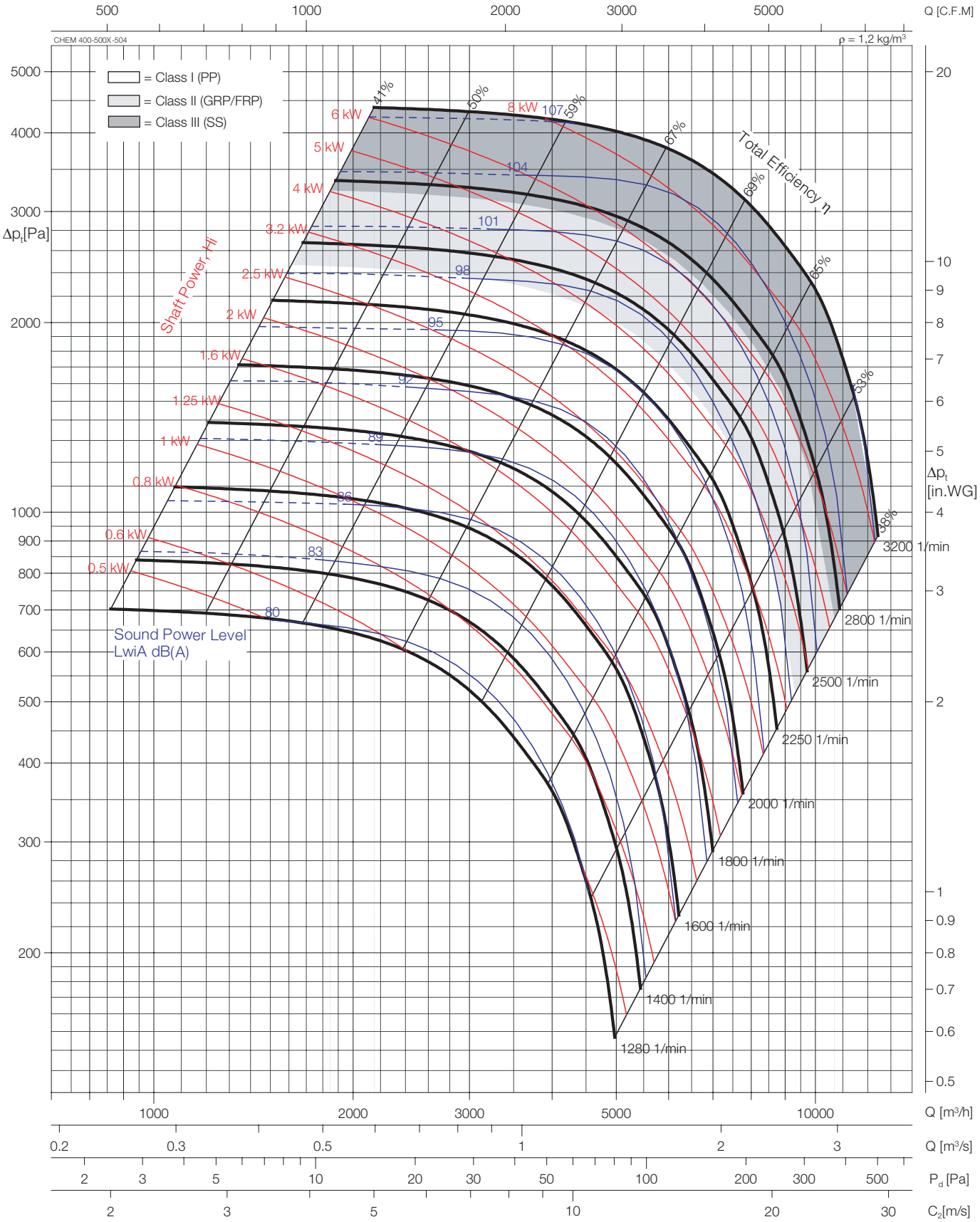

The test data were obtained in a laboratory accredited by AMCA for AMCA Standard 210 and 300.

Transmission type: direct drive and V-belt drive.

Performance certified is for installation type B - Free inlet, Ducted outlet. Power Rating (kW) does not include transmission losses, Performance ratings do not include the effects of accessories.

The A-weighted sound ratings shown have been calculated per AMCA International Standard 301. Values shown are for inlet LwiA sound power levels for installation Type B: free inlet, ducted outlet.

Sound power levels shown as dashed lines are not licensed to bear the AMCA seal.

Impeller diameter	D =	520	mm
Number of blades	z =	6	
Max.Speed Class I (PP)	n_{max} =	2400	1/min
Max.Speed Class II (GRP/FRP)	n_{max} =	2750	1/min
Max.Speed Class III (SS)	n_{max} =	3200	1/min

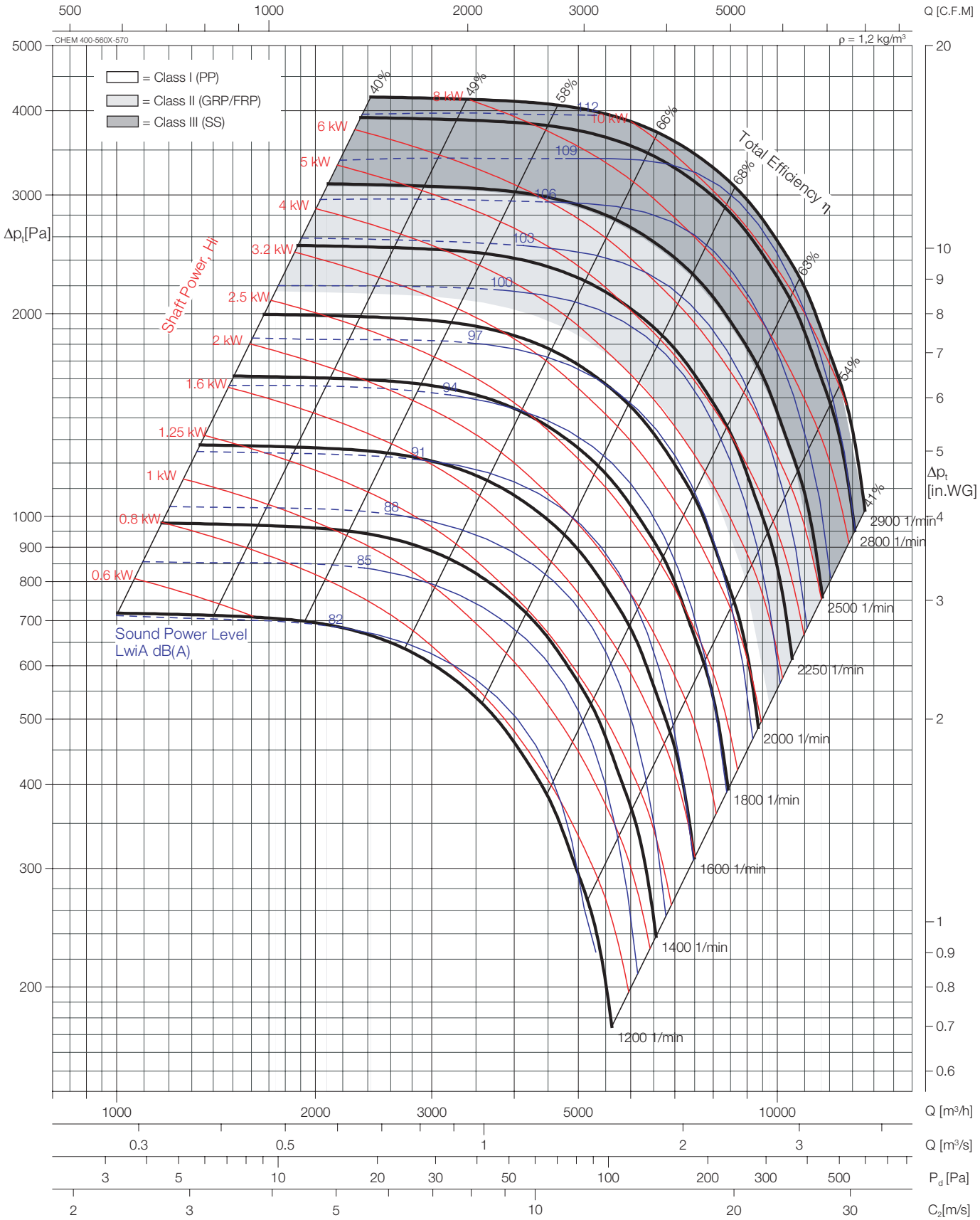

The test data were obtained in a laboratory accredited by AMCA for AMCA Standard 210 and 300.

Transmission type: direct drive and V-belt drive.

Performance certified is for installation type B - Free inlet, Ducted outlet. Power Rating (kW) does not include transmission losses, Performance ratings do not include the effects of accessories.

The A-weighted sound ratings shown have been calculated per AMCA International Standard 301. Values shown are for inlet LwiA sound power levels for installation Type B: free inlet, ducted outlet.

Sound power levels shown as dashed lines are not licensed to bear the AMCA seal.

Impeller diameter	D =	572	mm
Number of blades	z =	6	
Max.Speed Class I (PP)	n_{max} =	2080	1/min
Max.Speed Class II (GRP/FRP)	n_{max} =	2490	1/min
Max.Speed Class III (SS)	n_{max} =	2900	1/min

CHEM 450-500P-504

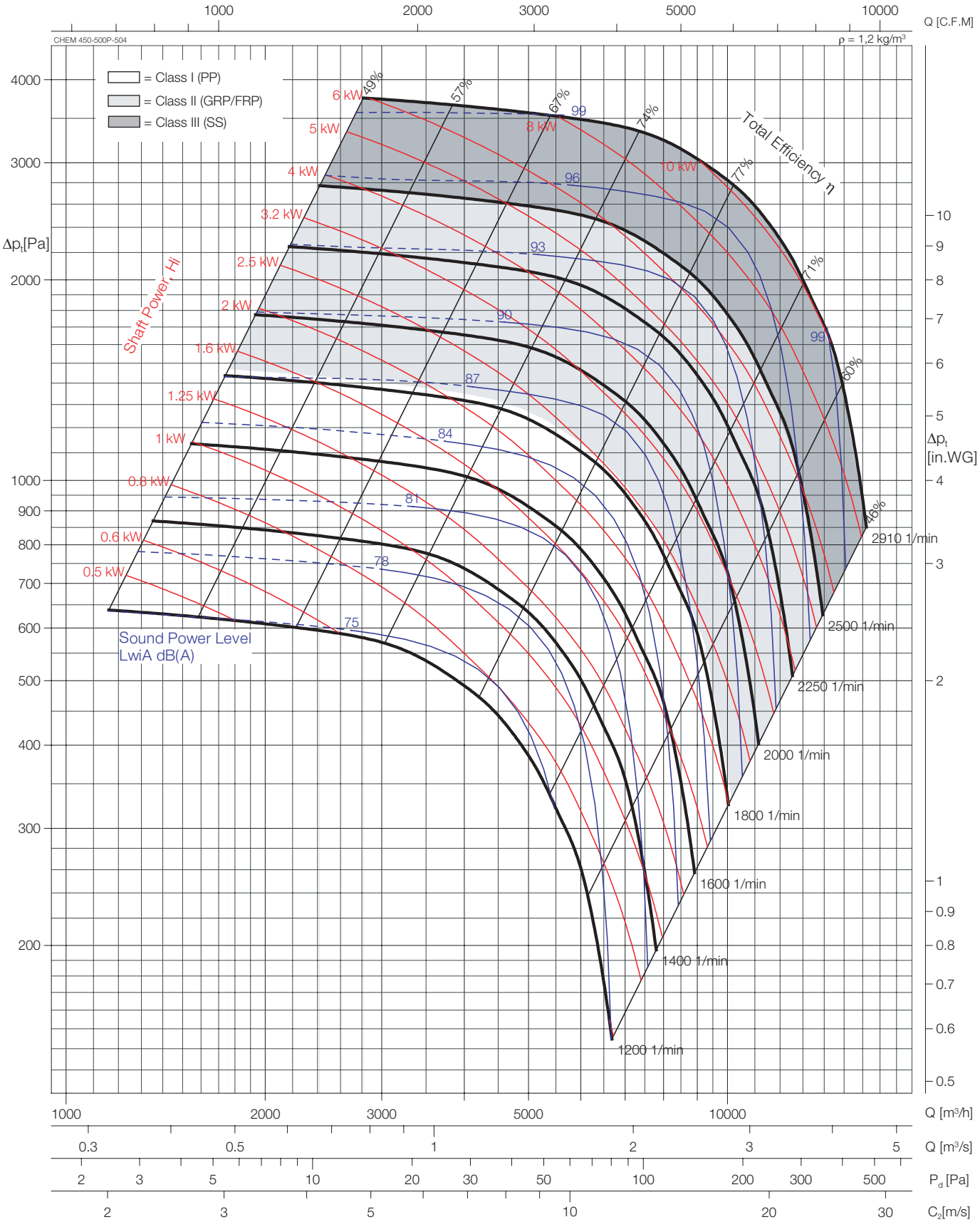

The test data were obtained in a laboratory accredited by AMCA for AMCA Standard 210 and 300.

Transmission type: direct drive and V-belt drive.

Performance certified is for installation type B - Free inlet, Ducted outlet. Power Rating (kW) does not include transmission losses, Performance ratings do not include the effects of accessories.

The A-weighted sound ratings shown have been calculated per AMCA International Standard 301. Values shown are for inlet LwiA sound power levels for installation Type B: free inlet, ducted outlet.

Sound power levels shown as dashed lines are not licensed to bear the AMCA seal.

Impeller diameter	D =	520	mm
Number of blades	z =	6	
Max.Speed Class I (PP)	n_{max} =	1820	1/min
Max.Speed Class II (GRP/FRP)	n_{max} =	2500	1/min
Max.Speed Class III (SS)	n_{max} =	2910	1/min

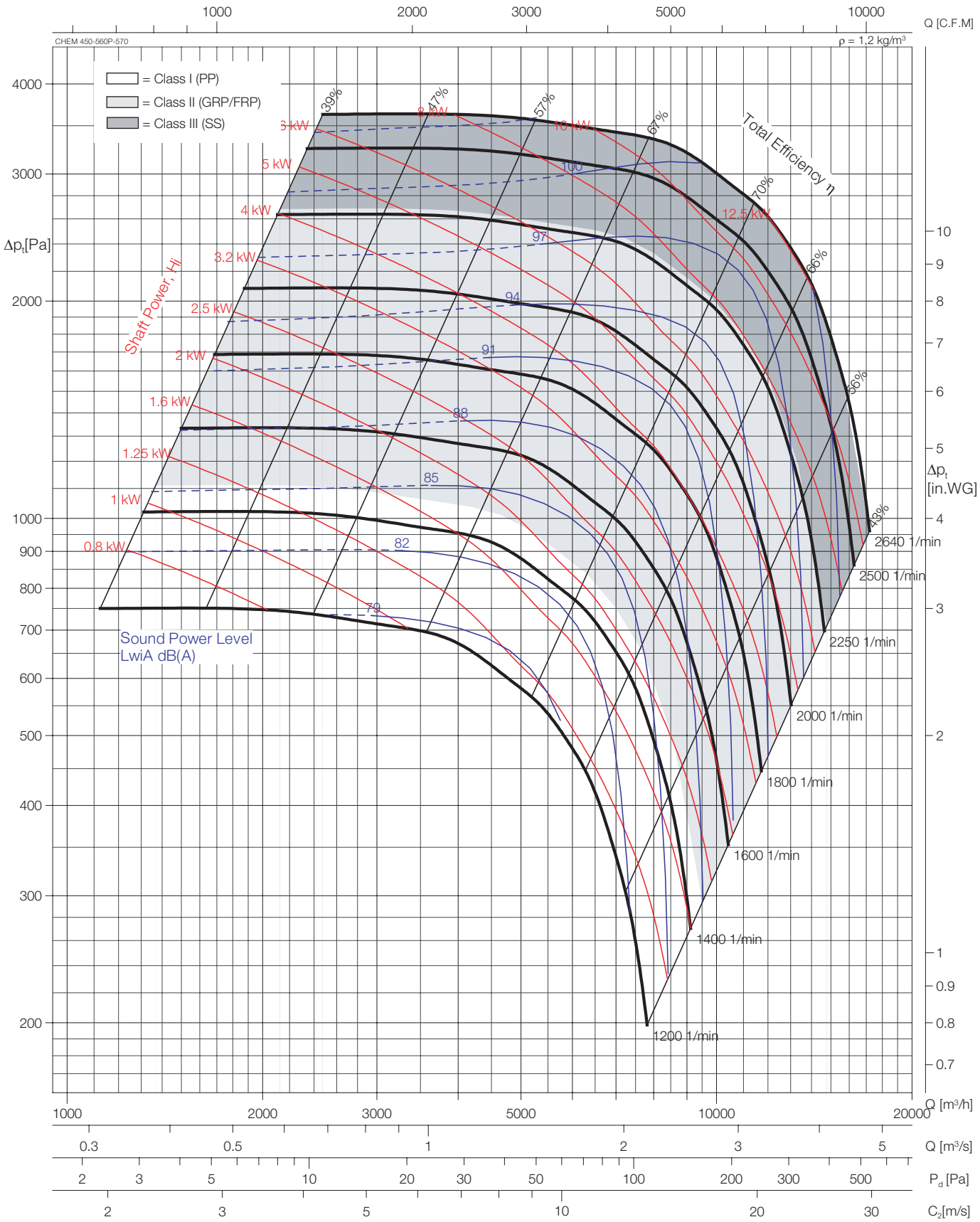

The test data were obtained in a laboratory accredited by AMCA for AMCA Standard 210 and 300.

Transmission type: direct drive and V-belt drive.

Performance certified is for installation type B - Free inlet, Ducted outlet. Power Rating (kW) does not include transmission losses, Performance ratings do not include the effects of accessories.

The A-weighted sound ratings shown have been calculated per AMCA International Standard 301. Values shown are for inlet LwiA sound power levels for installation Type B: free inlet, ducted outlet.

Sound power levels shown as dashed lines are not licensed to bear the AMCA seal.

Impeller diameter	D =	572	mm
Number of blades	z =	6	
Max.Speed Class I (PP)	n_{max} =	1460	1/min
Max.Speed Class II (GRP/FRP)	n_{max} =	2270	1/min
Max.Speed Class III (SS)	n_{max} =	2640	1/min

CHEM 450-560X-570

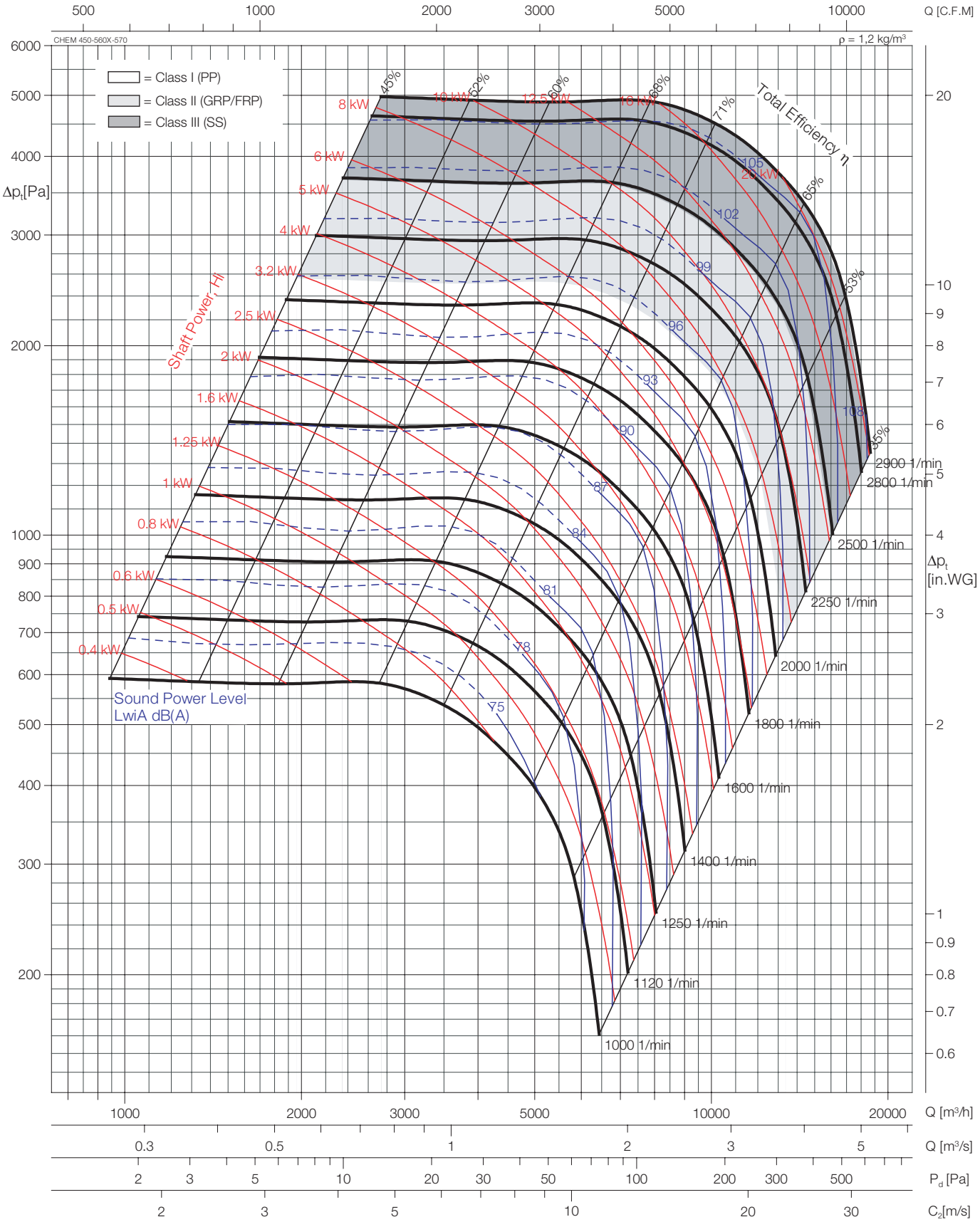

The test data were obtained in a laboratory accredited by AMCA for AMCA Standard 210 and 300.

Transmission type: direct drive and V-belt drive.

Performance certified is for installation type B - Free inlet, Ducted outlet. Power Rating (kW) does not include transmission losses, Performance ratings do not include the effects of accessories.

The A-weighted sound ratings shown have been calculated per AMCA International Standard 301. Values shown are for inlet LwiA sound power levels for installation Type B: free inlet, ducted outlet.

Sound power levels shown as dashed lines are not licensed to bear the AMCA seal.

Impeller diameter	D =	572	mm
Number of blades	z =	12	
Max.Speed Class I (PP)	n_{max} =	2080	1/min
Max.Speed Class II (GRP/FRP)	n_{max} =	2490	1/min
Max.Speed Class III (SS)	n_{max} =	2900	1/min

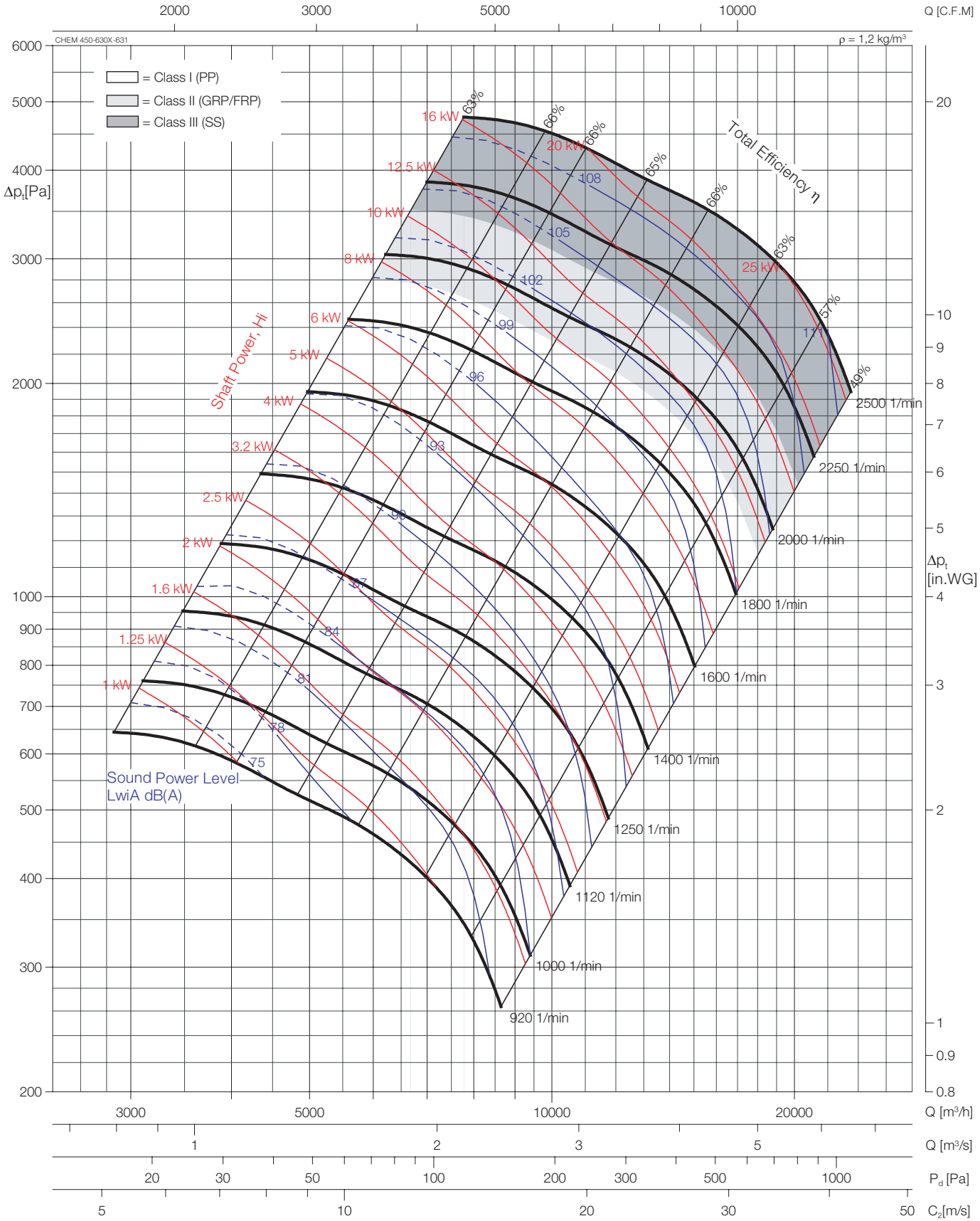

The test data were obtained in a laboratory accredited by AMCA for AMCA Standard 210 and 300.

Transmission type: direct drive and V-belt drive.

Performance certified is for installation type B - Free inlet, Ducted outlet. Power Rating (kW) does not include transmission losses, Performance ratings do not include the effects of accessories.

The A-weighted sound ratings shown have been calculated per AMCA International Standard 301. Values shown are for inlet LwiA sound power levels for installation Type B: free inlet, ducted outlet.

Sound power levels shown as dashed lines are not licensed to bear the AMCA seal.

Impeller diameter	D =	640	mm
Number of blades	z =	12	
Max.Speed Class I (PP)	n_{max} =	1920	1/min
Max.Speed Class II (GRP/FRP)	n_{max} =	2150	1/min
Max.Speed Class III (SS)	n_{max} =	2500	1/min

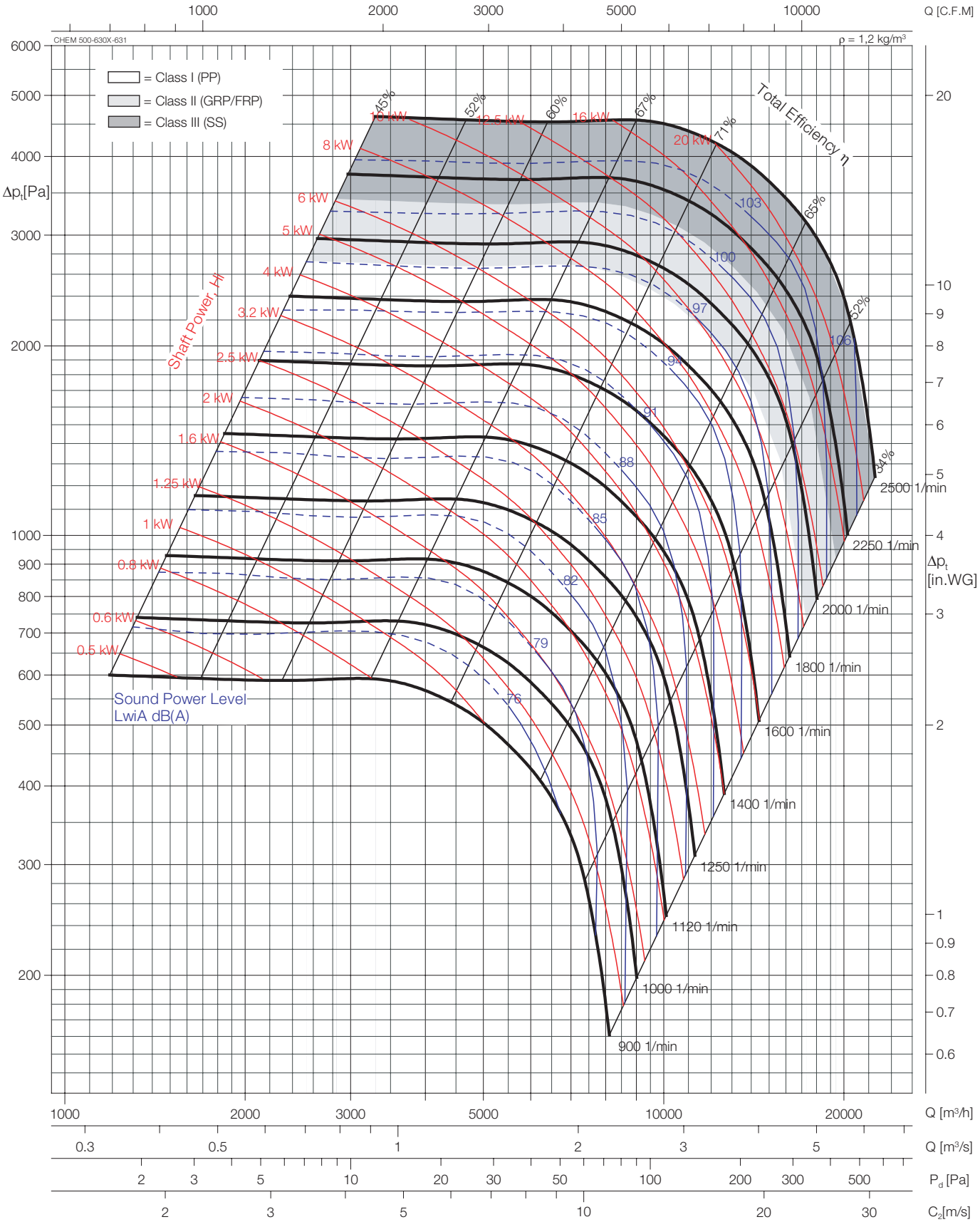

The test data were obtained in a laboratory accredited by AMCA for AMCA Standard 210 and 300.

Transmission type: direct drive and V-belt drive.

Performance certified is for installation type B - Free inlet, Ducted outlet. Power Rating (kW) does not include transmission losses, Performance ratings do not include the effects of accessories.

The A-weighted sound ratings shown have been calculated per AMCA International Standard 301. Values shown are for inlet LwiA sound power levels for installation Type B: free inlet, ducted outlet.

Sound power levels shown as dashed lines are not licensed to bear the AMCA seal.

Impeller diameter	D =	640	mm
Number of blades	z =	12	
Max.Speed Class I (PP)	n_{max} =	1920	1/min
Max.Speed Class II (GRP/FRP)	n_{max} =	2150	1/min
Max.Speed Class III (SS)	n_{max} =	2500	1/min

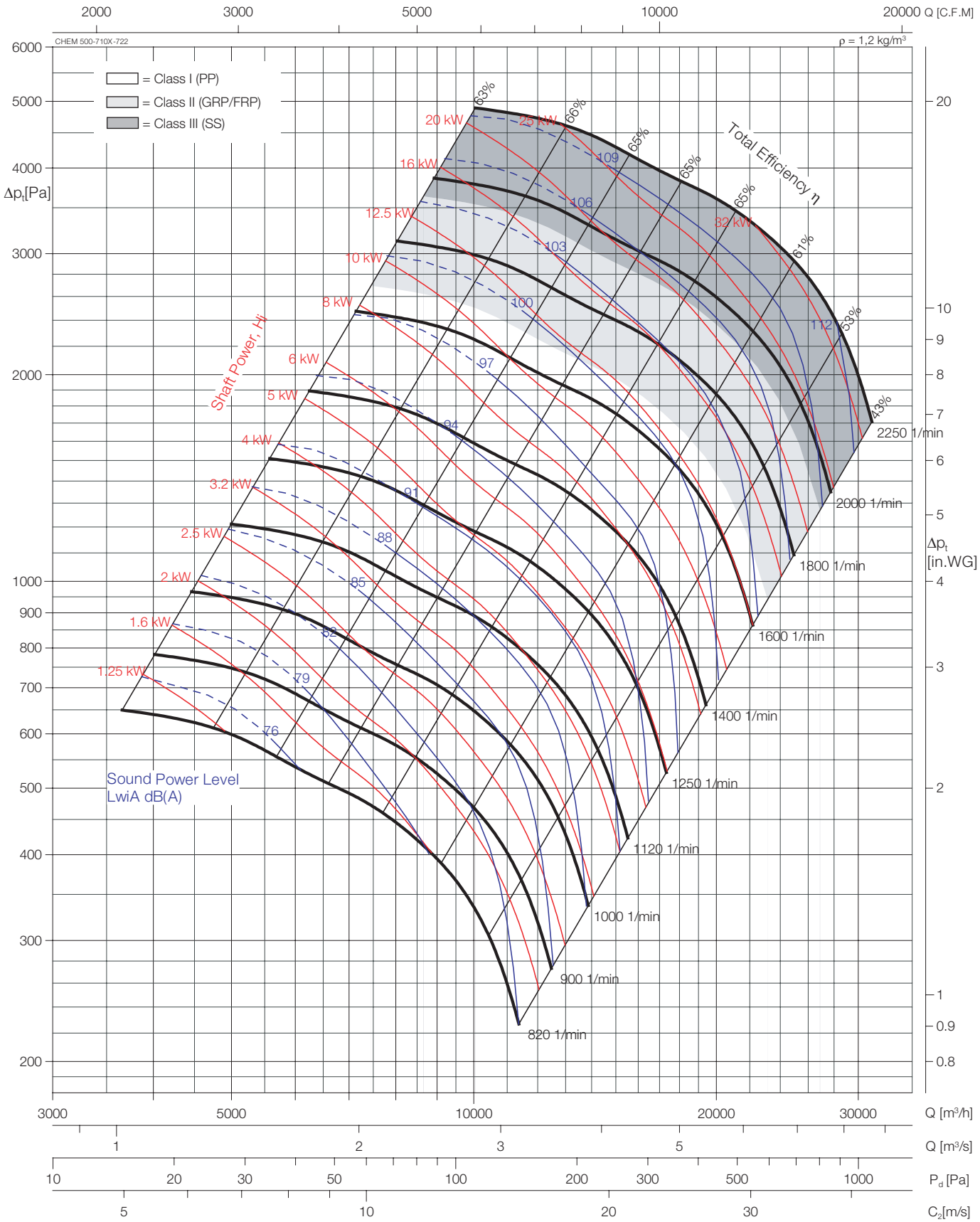

The test data were obtained in a laboratory accredited by AMCA for AMCA Standard 210 and 300.

Transmission type: direct drive and V-belt drive.

Performance certified is for installation type B - Free inlet, Ducted outlet. Power Rating (kW) does not include transmission losses, Performance ratings do not include the effects of accessories.

The A-weighted sound ratings shown have been calculated per AMCA International Standard 301. Values shown are for inlet LwiA sound power levels for installation Type B: free inlet, ducted outlet.

Sound power levels shown as dashed lines are not licensed to bear the AMCA seal.

Impeller diameter	D =	722	mm
Number of blades	z =	12	
Max.Speed Class I (PP)	n_{max} =	1670	1/min
Max.Speed Class II (GRP/FRP)	n_{max} =	1940	1/min
Max.Speed Class III (SS)	n_{max} =	2250	1/min

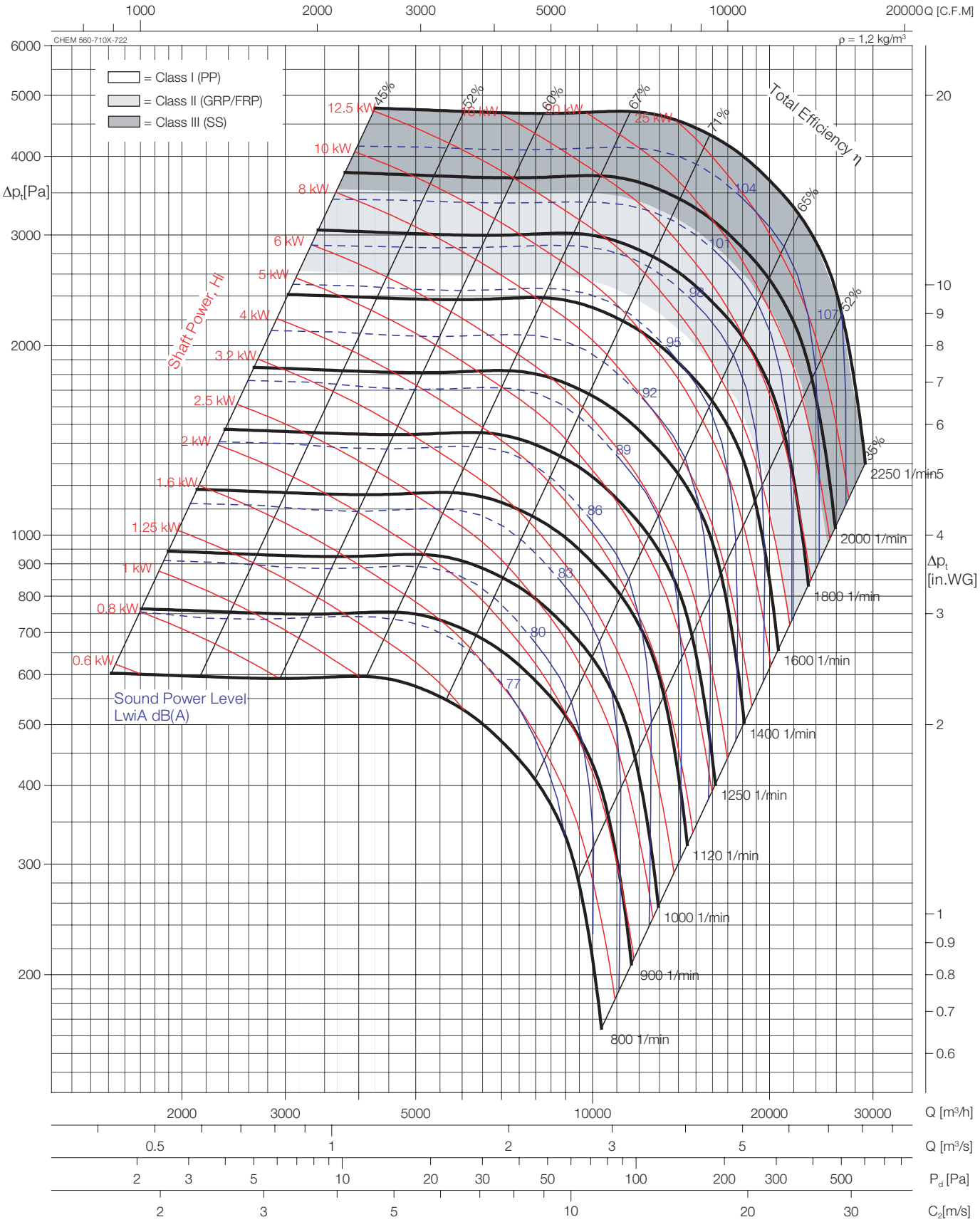

The test data were obtained in a laboratory accredited by AMCA for AMCA Standard 210 and 300.

Transmission type: direct drive and V-belt drive.

Performance certified is for installation type B - Free inlet, Ducted outlet. Power Rating (kW) does not include transmission losses, Performance ratings do not include the effects of accessories.

The A-weighted sound ratings shown have been calculated per AMCA International Standard 301. Values shown are for inlet LwiA sound power levels for installation Type B: free inlet, ducted outlet.

Sound power levels shown as dashed lines are not licensed to bear the AMCA seal.

Impeller diameter	D =	722	mm
Number of blades	z =	12	
Max.Speed Class I (PP)	n_{max} =	1670	1/min
Max.Speed Class II (GRP/FRP)	n_{max} =	1940	1/min
Max.Speed Class III (SS)	n_{max} =	2250	1/min

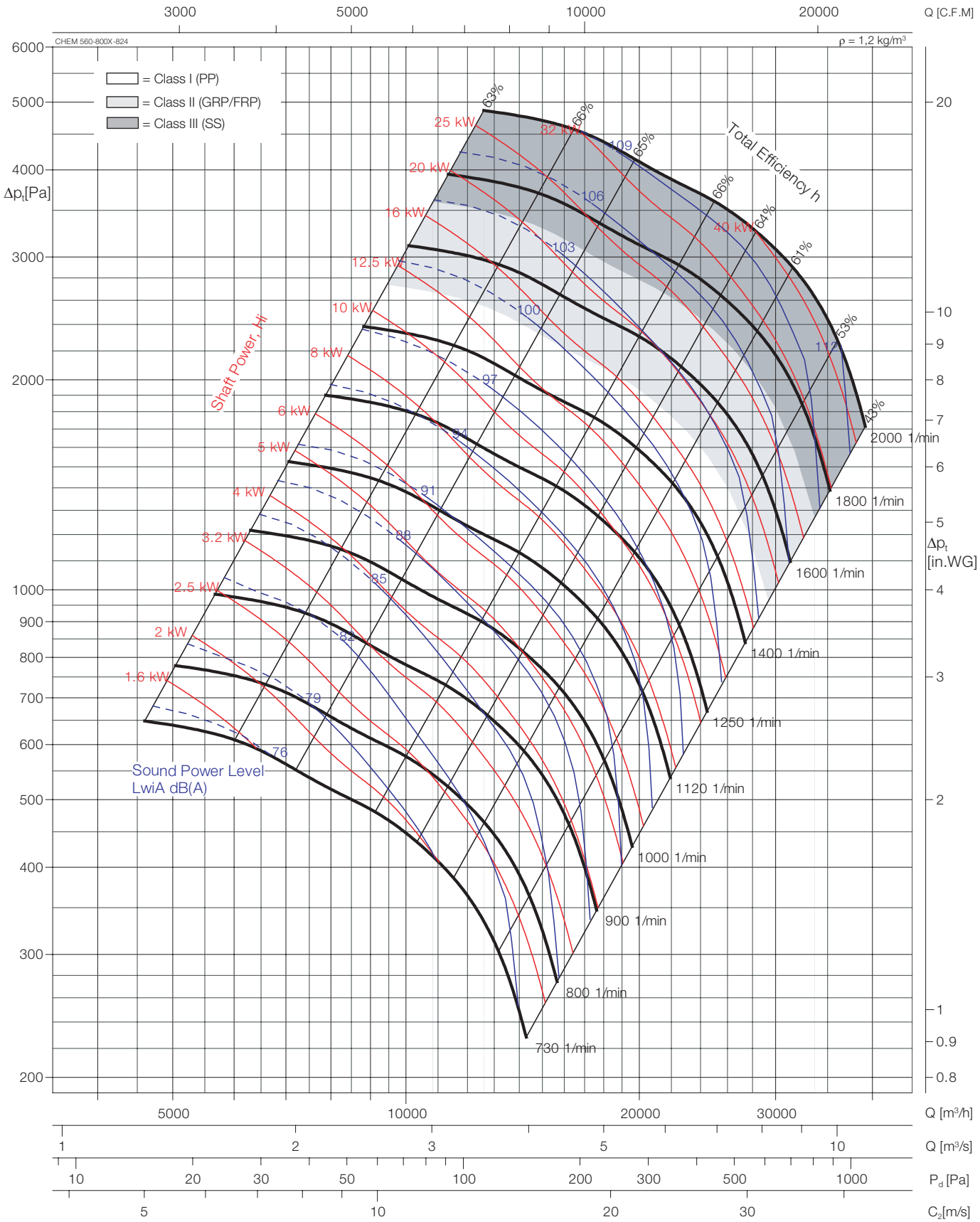

The test data were obtained in a laboratory accredited by AMCA for AMCA Standard 210 and 300.

Transmission type: direct drive and V-belt drive.

Performance certified is for installation type B - Free inlet, Ducted outlet. Power Rating (kW) does not include transmission losses, Performance ratings do not include the effects of accessories.

The A-weighted sound ratings shown have been calculated per AMCA International Standard 301. Values shown are for inlet LwiA sound power levels for installation Type B: free inlet, ducted outlet.

Sound power levels shown as dashed lines are not licensed to bear the AMCA seal.

Impeller diameter	D =	810	mm
Number of blades	z =	12	
Max.Speed Class I (PP)	n_{max} =	1500	1/min
Max.Speed Class II (GRP/FRP)	n_{max} =	1720	1/min
Max.Speed Class III (SS)	n_{max} =	2000	1/min

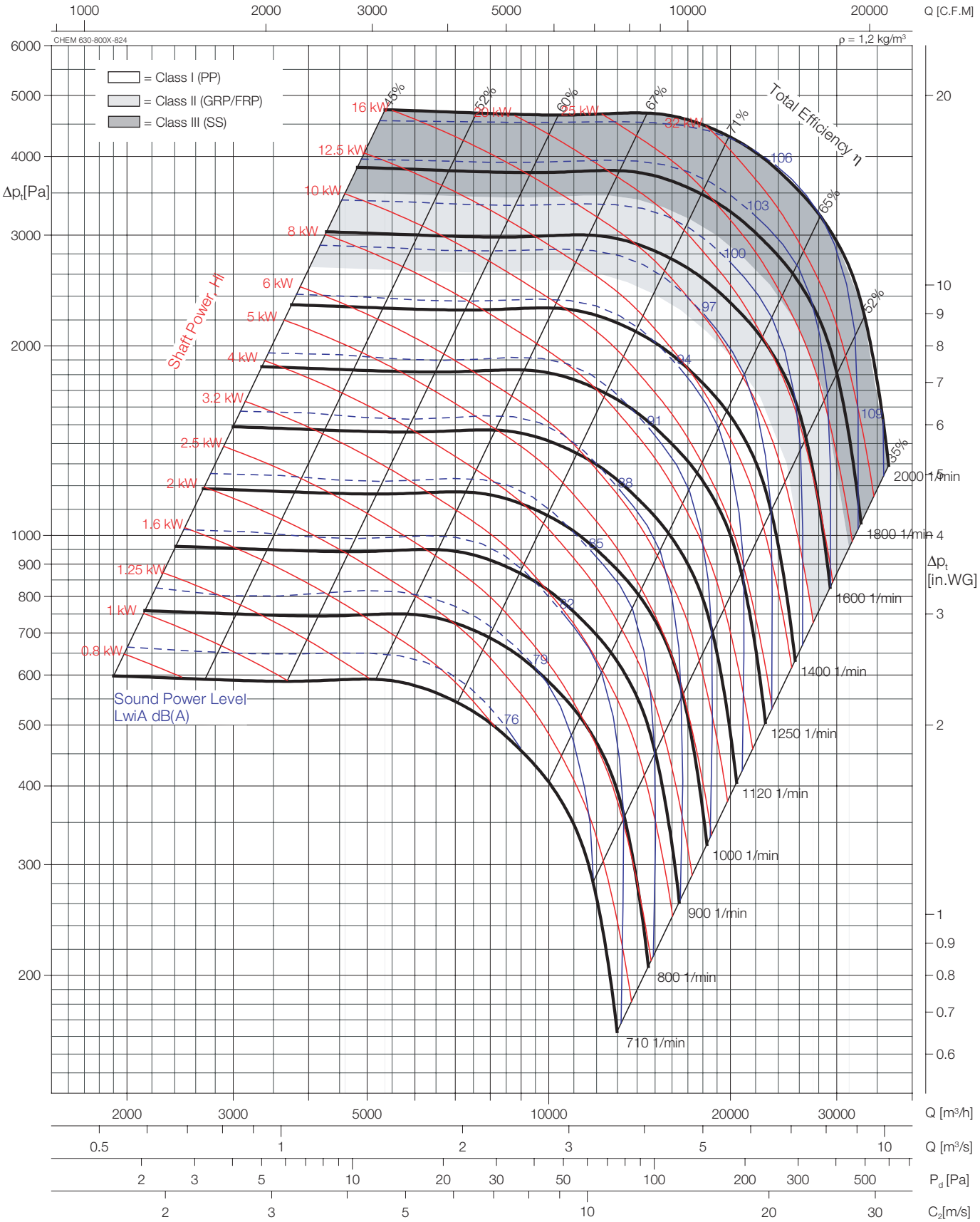

The test data were obtained in a laboratory accredited by AMCA for AMCA Standard 210 and 300.

Transmission type: direct drive and V-belt drive.

Performance certified is for installation type B - Free inlet, Ducted outlet. Power Rating (kW) does not include transmission losses, Performance ratings do not include the effects of accessories.

The A-weighted sound ratings shown have been calculated per AMCA International Standard 301. Values shown are for inlet LwiA sound power levels for installation Type B: free inlet, ducted outlet.

Sound power levels shown as dashed lines are not licensed to bear the AMCA seal.

Impeller diameter	D =	810	mm
Number of blades	z =	12	
Max.Speed Class I (PP)	n_{max} =	1500	1/min
Max.Speed Class II (GRP/FRP)	n_{max} =	1720	1/min
Max.Speed Class III (SS)	n_{max} =	2000	1/min

Performance Curve

CHEM 630-900X-912

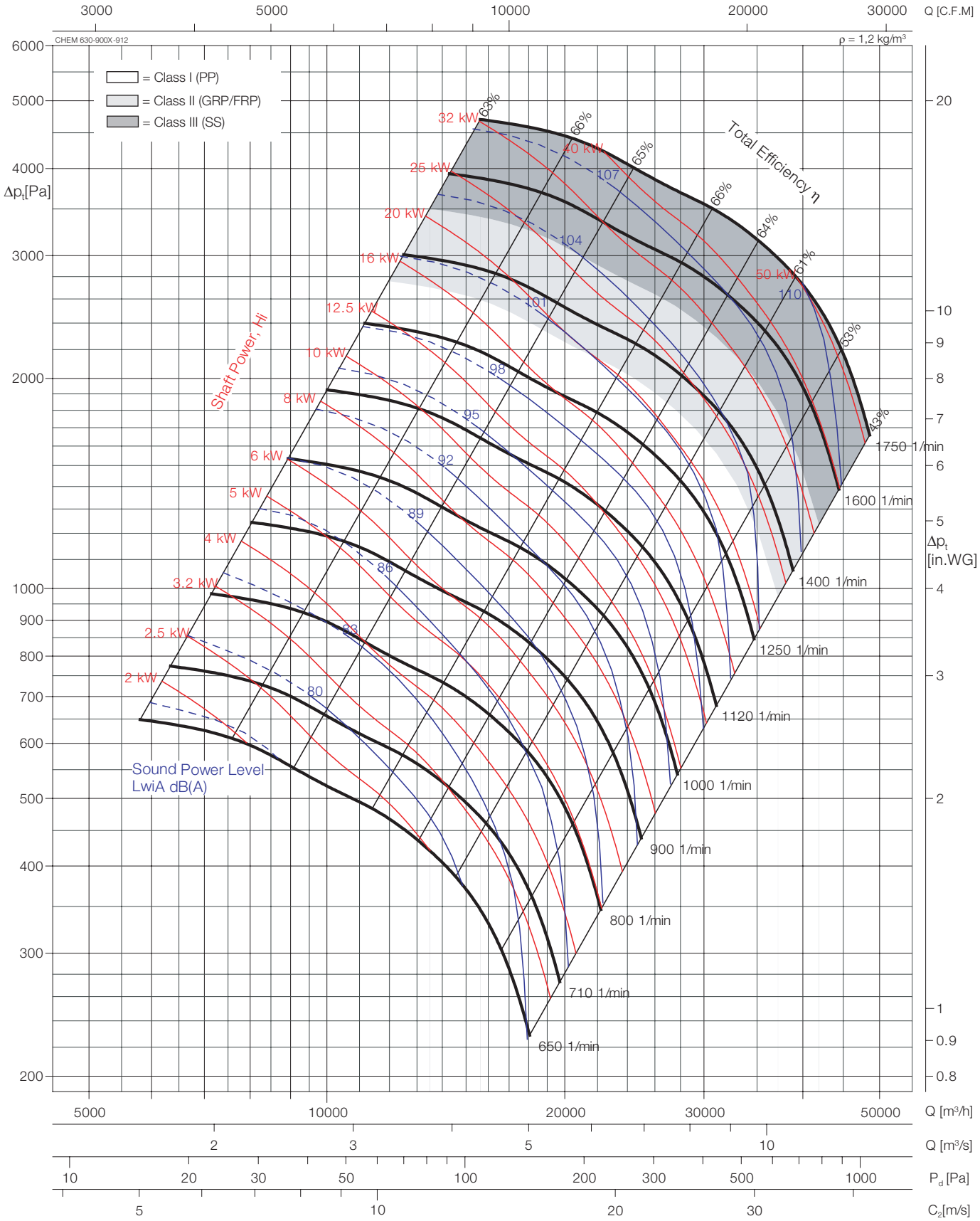

The test data were obtained in a laboratory accredited by AMCA for AMCA Standard 210 and 300.

Transmission type: direct drive and V-belt drive.

Performance certified is for installation type B - Free inlet, Ducted outlet. Power Rating (kW) does not include transmission losses, Performance ratings do not include the effects of accessories.

The A-weighted sound ratings shown have been calculated per AMCA International Standard 301. Values shown are for inlet LwiA sound power levels for installation Type B: free inlet, ducted outlet.

Sound power levels shown as dashed lines are not licensed to bear the AMCA seal.

Impeller diameter	D =	910	mm
Number of blades	z =	12	
Max.Speed Class I (PP)	n_{max} =	1340	1/min
Max.Speed Class II (GRP/FRP)	n_{max} =	1510	1/min
Max.Speed Class III (SS)	n_{max} =	1750	1/min

CHEM 710-900X-912

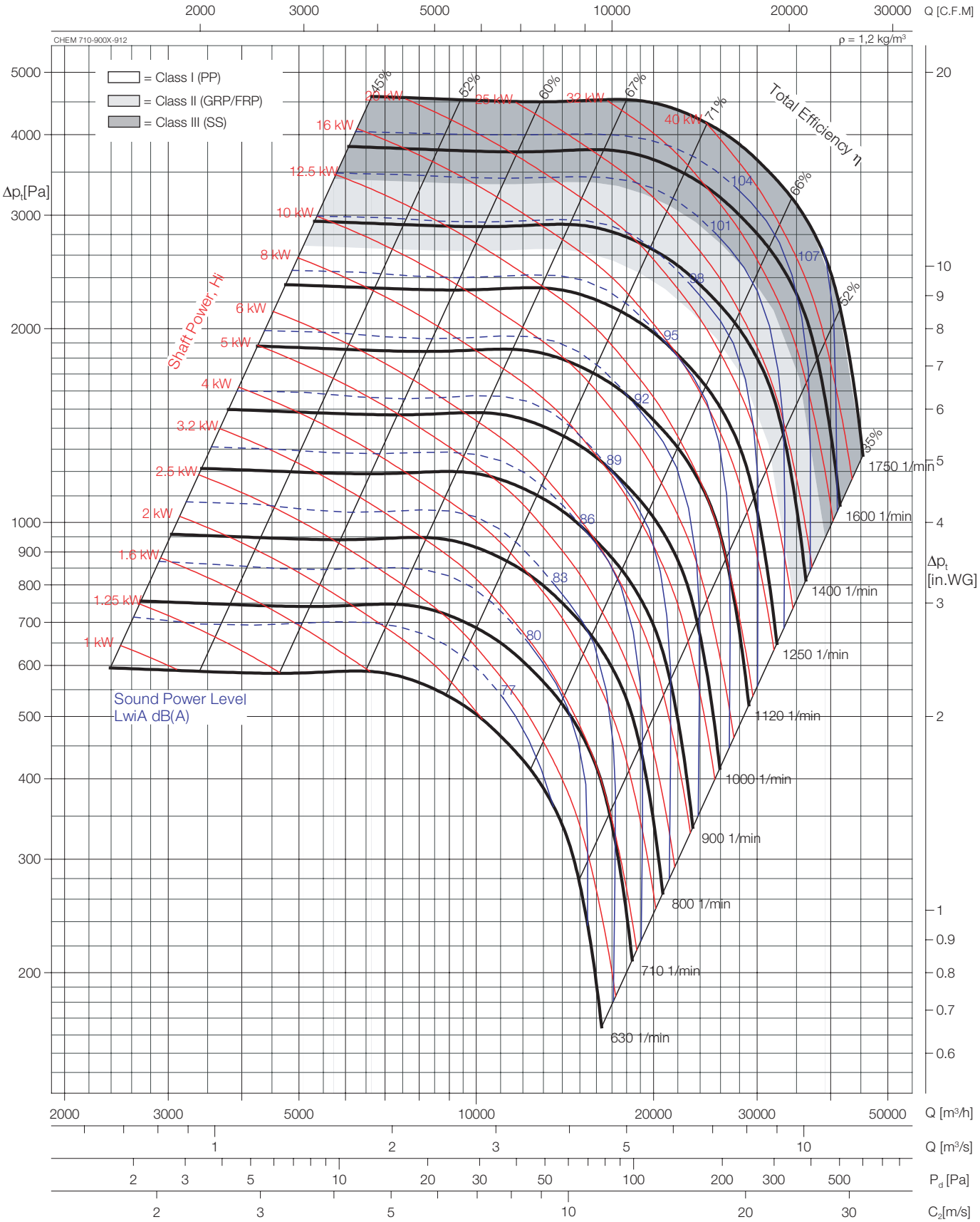

The test data were obtained in a laboratory accredited by AMCA for AMCA Standard 210 and 300.

Transmission type: direct drive and V-belt drive.

Performance certified is for installation type B - Free inlet, Ducted outlet. Power Rating (kW) does not include transmission losses, Performance ratings do not include the effects of accessories.

The A-weighted sound ratings shown have been calculated per AMCA International Standard 301. Values shown are for inlet LwiA sound power levels for installation Type B: free inlet, ducted outlet.

Sound power levels shown as dashed lines are not licensed to bear the AMCA seal.

Impeller diameter	D =	910	mm
Number of blades	z =	12	
Max.Speed Class I (PP)	n_{max} =	1340	1/min
Max.Speed Class II (GRP/FRP)	n_{max} =	1510	1/min
Max.Speed Class III (SS)	n_{max} =	1750	1/min

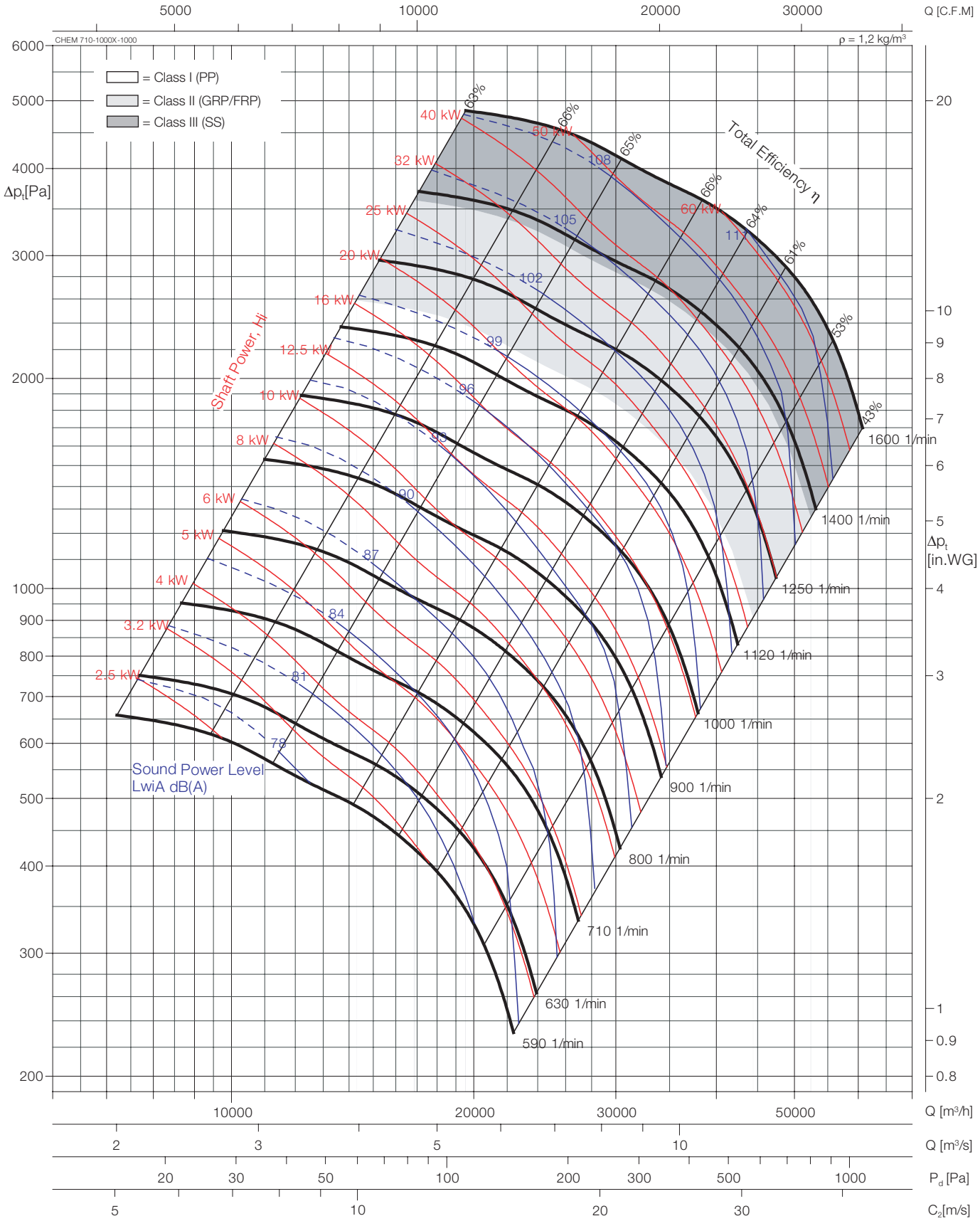

The test data were obtained in a laboratory accredited by AMCA for AMCA Standard 210 and 300.

Transmission type: direct drive and V-belt drive.

Performance certified is for installation type B - Free inlet, Ducted outlet. Power Rating (kW) does not include transmission losses, Performance ratings do not include the effects of accessories.

The A-weighted sound ratings shown have been calculated per AMCA International Standard 301. Values shown are for inlet LwiA sound power levels for installation Type B: free inlet, ducted outlet.

Sound power levels shown as dashed lines are not licensed to bear the AMCA seal.

Impeller diameter	D =	1010	mm
Number of blades	z =	12	
Max.Speed Class I (PP)	n_{max} =	1170	1/min
Max.Speed Class II (GRP/FRP)	n_{max} =	1380	1/min
Max.Speed Class III (SS)	n_{max} =	1600	1/min

CHEM 800-1000X-1000

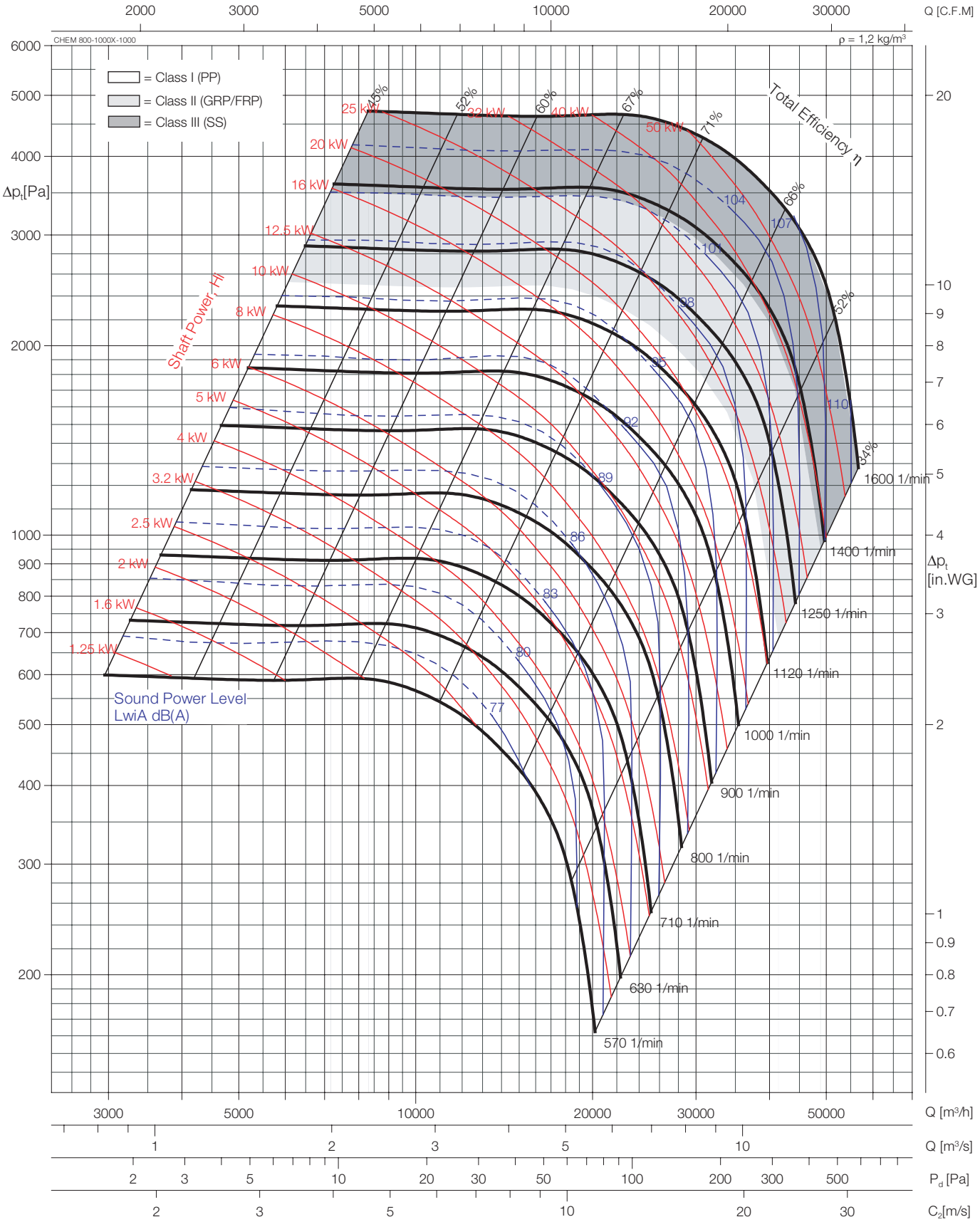

The test data were obtained in a laboratory accredited by AMCA for AMCA Standard 210 and 300.

Transmission type: direct drive and V-belt drive.

Performance certified is for installation type B - Free inlet, Ducted outlet. Power Rating (kW) does not include transmission losses, Performance ratings do not include the effects of accessories.

The A-weighted sound ratings shown have been calculated per AMCA International Standard 301. Values shown are for inlet LwiA sound power levels for installation Type B: free inlet, ducted outlet.

Sound power levels shown as dashed lines are not licensed to bear the AMCA seal.

Impeller diameter	D =	1010	mm
Number of blades	z =	12	
Max.Speed Class I (PP)	n_{max} =	1170	1/min
Max.Speed Class II (GRP/FRP)	n_{max} =	1380	1/min
Max.Speed Class III (SS)	n_{max} =	1600	1/min

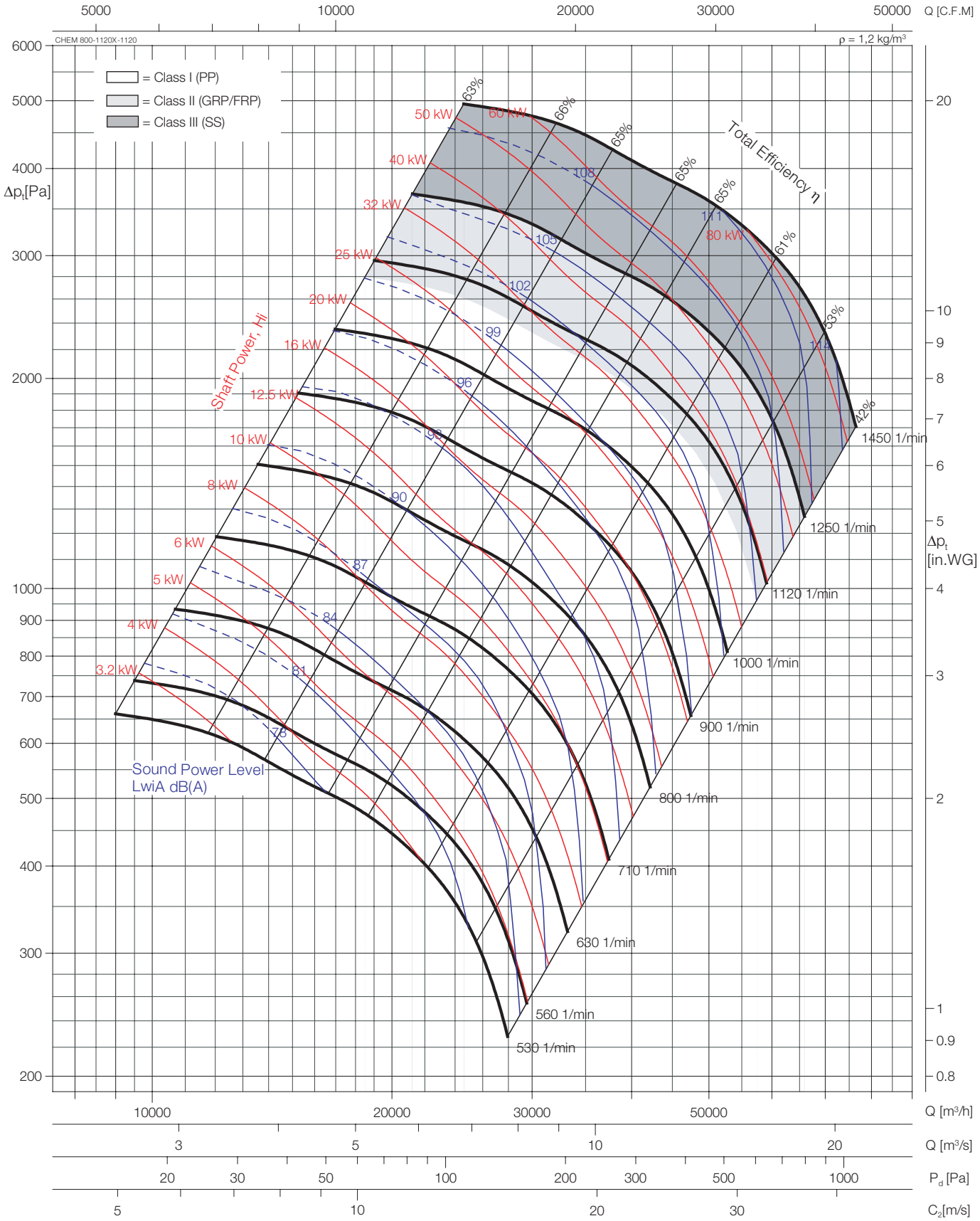

The test data were obtained in a laboratory accredited by AMCA for AMCA Standard 210 and 300.

Transmission type: direct drive and V-belt drive.

Performance certified is for installation type B - Free inlet, Ducted outlet. Power Rating (kW) does not include transmission losses, Performance ratings do not include the effects of accessories.

The A-weighted sound ratings shown have been calculated per AMCA International Standard 301. Values shown are for inlet LwiA sound power levels for installation Type B: free inlet, ducted outlet.

Sound power levels shown as dashed lines are not licensed to bear the AMCA seal.

Impeller diameter	D =	1127	mm
Number of blades	z =	12	
Max.Speed Class I (PP)	n_{max} =	1090	1/min
Max.Speed Class II (GRP/FRP)	n_{max} =	1250	1/min
Max.Speed Class III (SS)	n_{max} =	1450	1/min

CHEM 900-1120X-1120

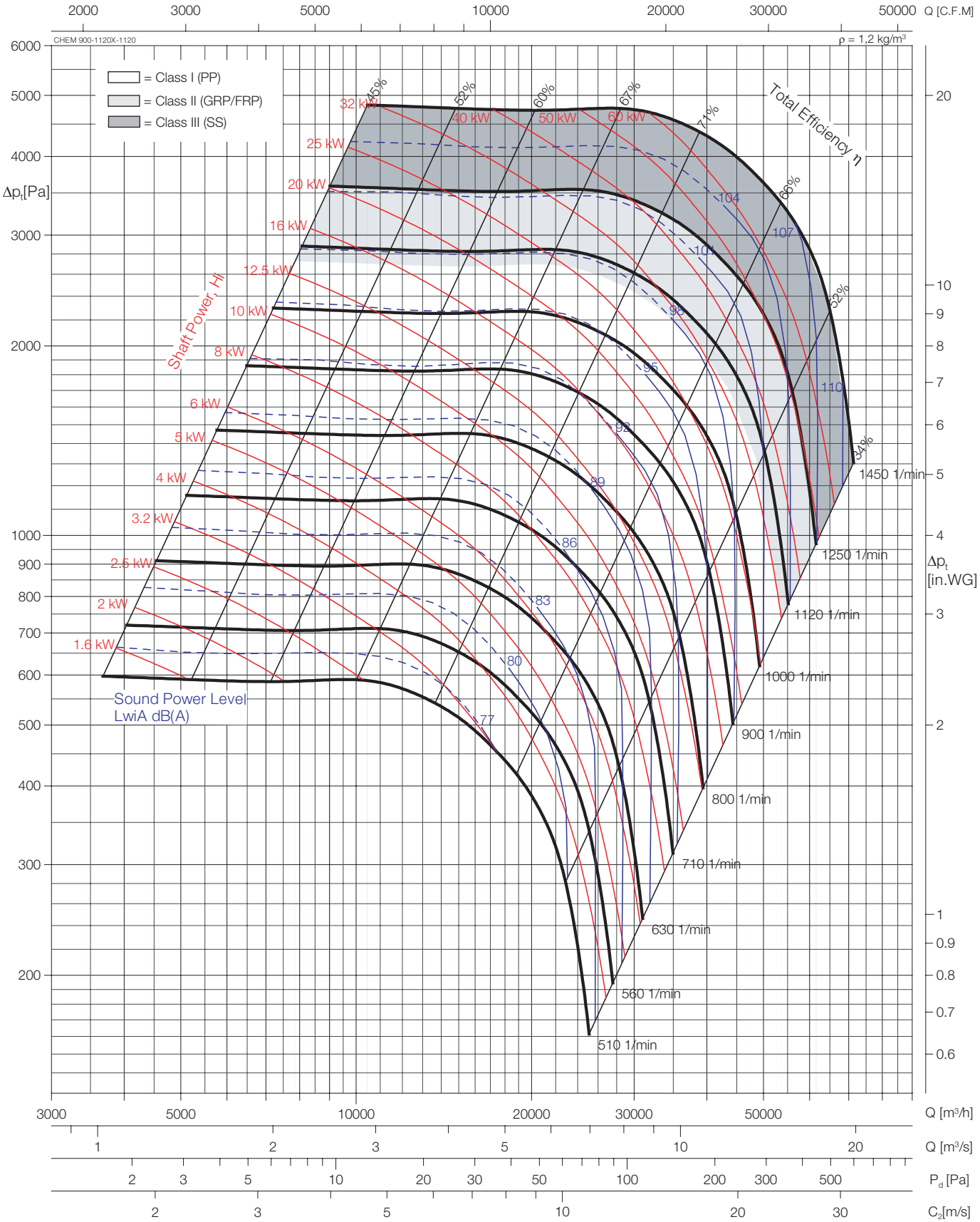

The test data were obtained in a laboratory accredited by AMCA for AMCA Standard 210 and 300.

Transmission type: direct drive and V-belt drive.

Performance certified is for installation type B - Free inlet, Ducted outlet. Power Rating (kW) does not include transmission losses, Performance ratings do not include the effects of accessories.

The A-weighted sound ratings shown have been calculated per AMCA International Standard 301. Values shown are for inlet LwiA sound power levels for installation Type B: free inlet, ducted outlet.

Sound power levels shown as dashed lines are not licensed to bear the AMCA seal.

Impeller diameter	D =	1127	mm
Number of blades	z =	12	
Max.Speed Class I (PP)	n_{max} =	1090	1/min
Max.Speed Class II (GRP/FRP)	n_{max} =	1250	1/min
Max.Speed Class III (SS)	n_{max} =	1450	1/min

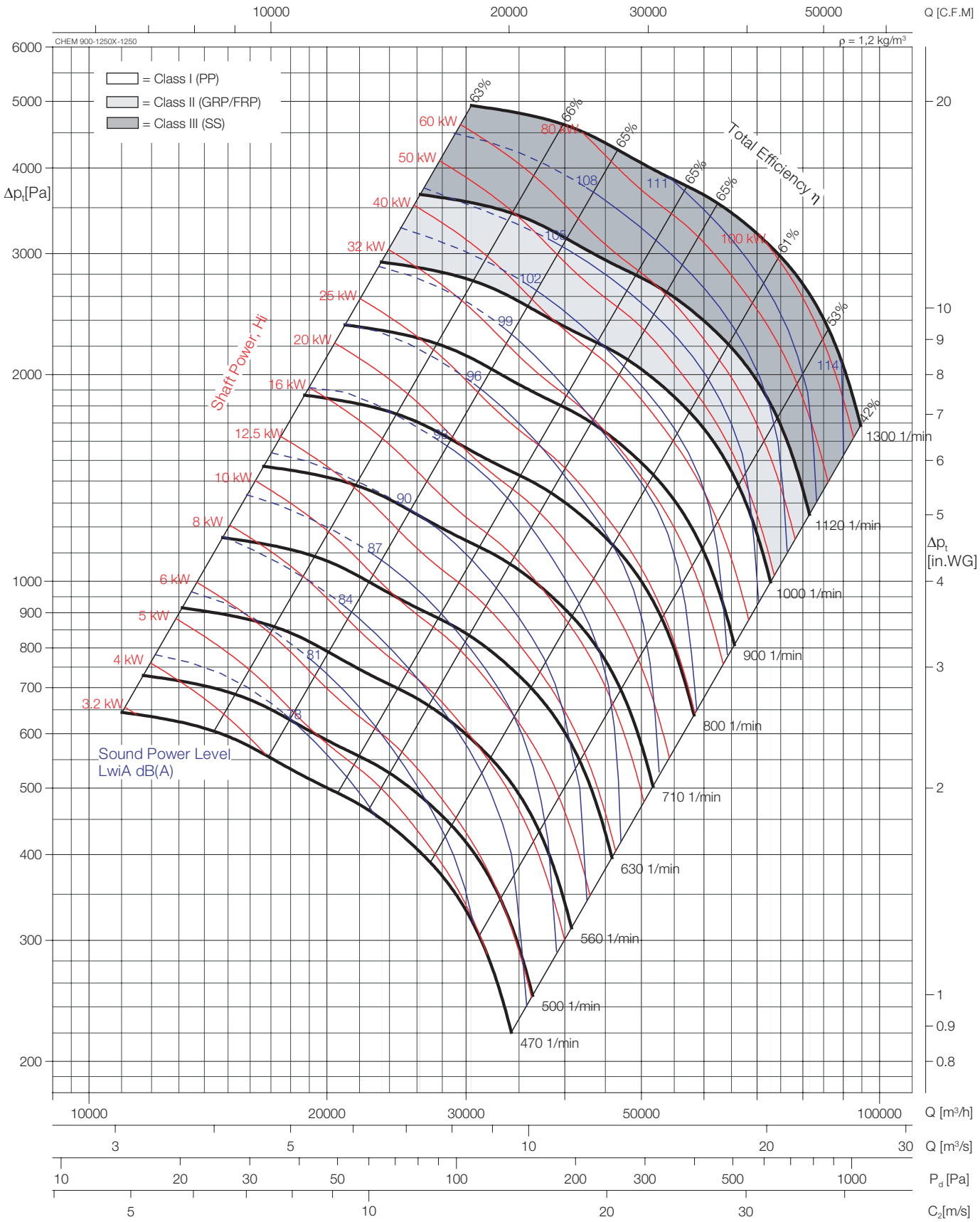

The test data were obtained in a laboratory accredited by AMCA for AMCA Standard 210 and 300.

Transmission type: direct drive and V-belt drive.

Performance certified is for installation type B - Free inlet, Ducted outlet. Power Rating (kW) does not include transmission losses, Performance ratings do not include the effects of accessories.

The A-weighted sound ratings shown have been calculated per AMCA International Standard 301. Values shown are for inlet LwiA sound power levels for installation Type B: free inlet, ducted outlet.

Sound power levels shown as dashed lines are not licensed to bear the AMCA seal.

Impeller diameter	D =	1255	mm
Number of blades	z =	12	
Max.Speed Class I (PP)	n_{max} =	1000	1/min
Max.Speed Class II (GRP/FRP)	n_{max} =	1120	1/min
Max.Speed Class III (SS)	n_{max} =	1300	1/min

CHEM 1000-1250X-1250

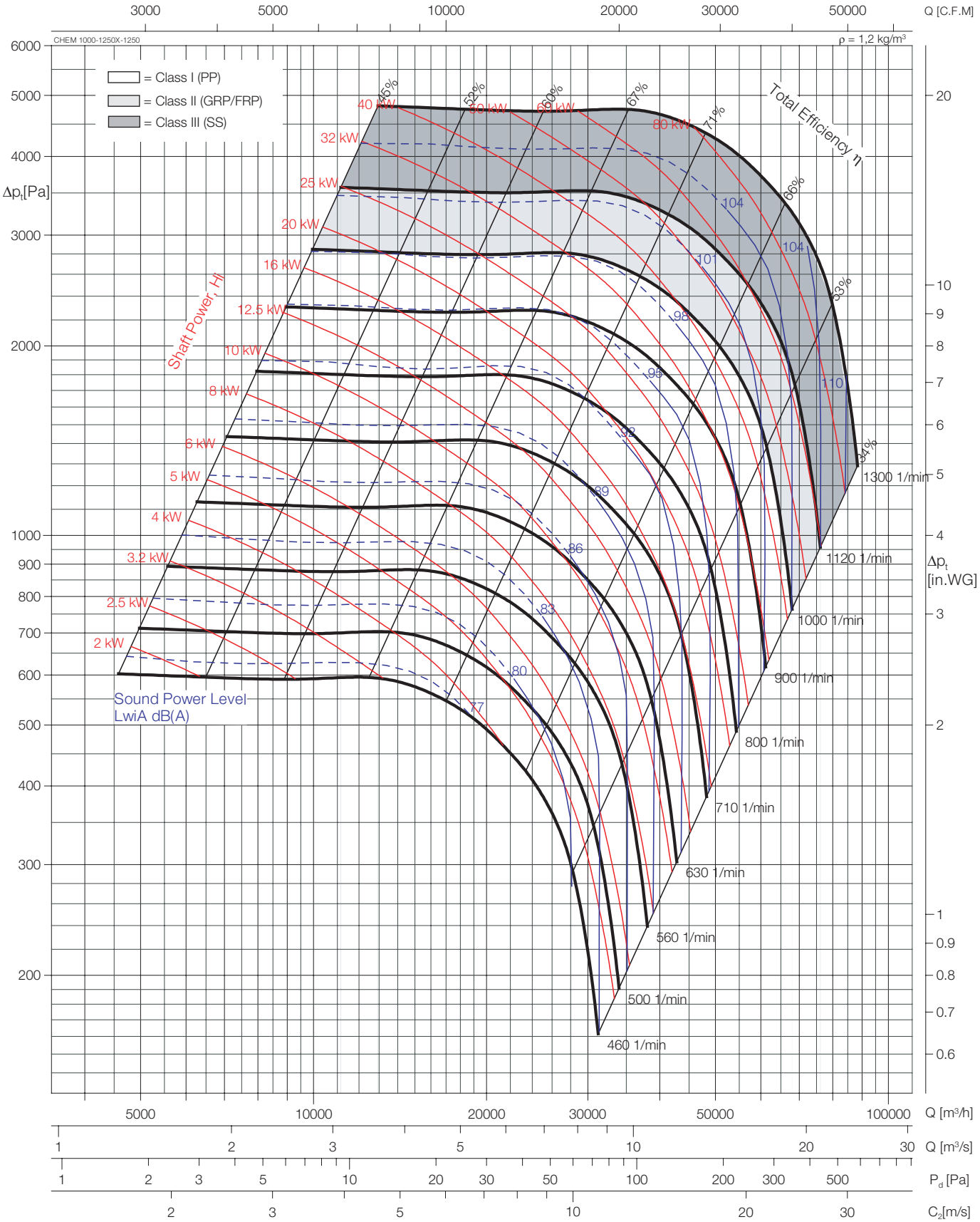

The test data were obtained in a laboratory accredited by AMCA for AMCA Standard 210 and 300.

Transmission type: direct drive and V-belt drive.

Performance certified is for installation type B - Free inlet, Ducted outlet. Power Rating (kW) does not include transmission losses, Performance ratings do not include the effects of accessories.

The A-weighted sound ratings shown have been calculated per AMCA International Standard 301. Values shown are for inlet LwiA sound power levels for installation Type B: free inlet, ducted outlet.

Sound power levels shown as dashed lines are not licensed to bear the AMCA seal.

Impeller diameter	D =	1255	mm
Number of blades	z =	12	
Max.Speed Class I (PP)	n_{max} =	1000	1/min
Max.Speed Class II (GRP/FRP)	n_{max} =	1120	1/min
Max.Speed Class III (SS)	n_{max} =	1300	1/min

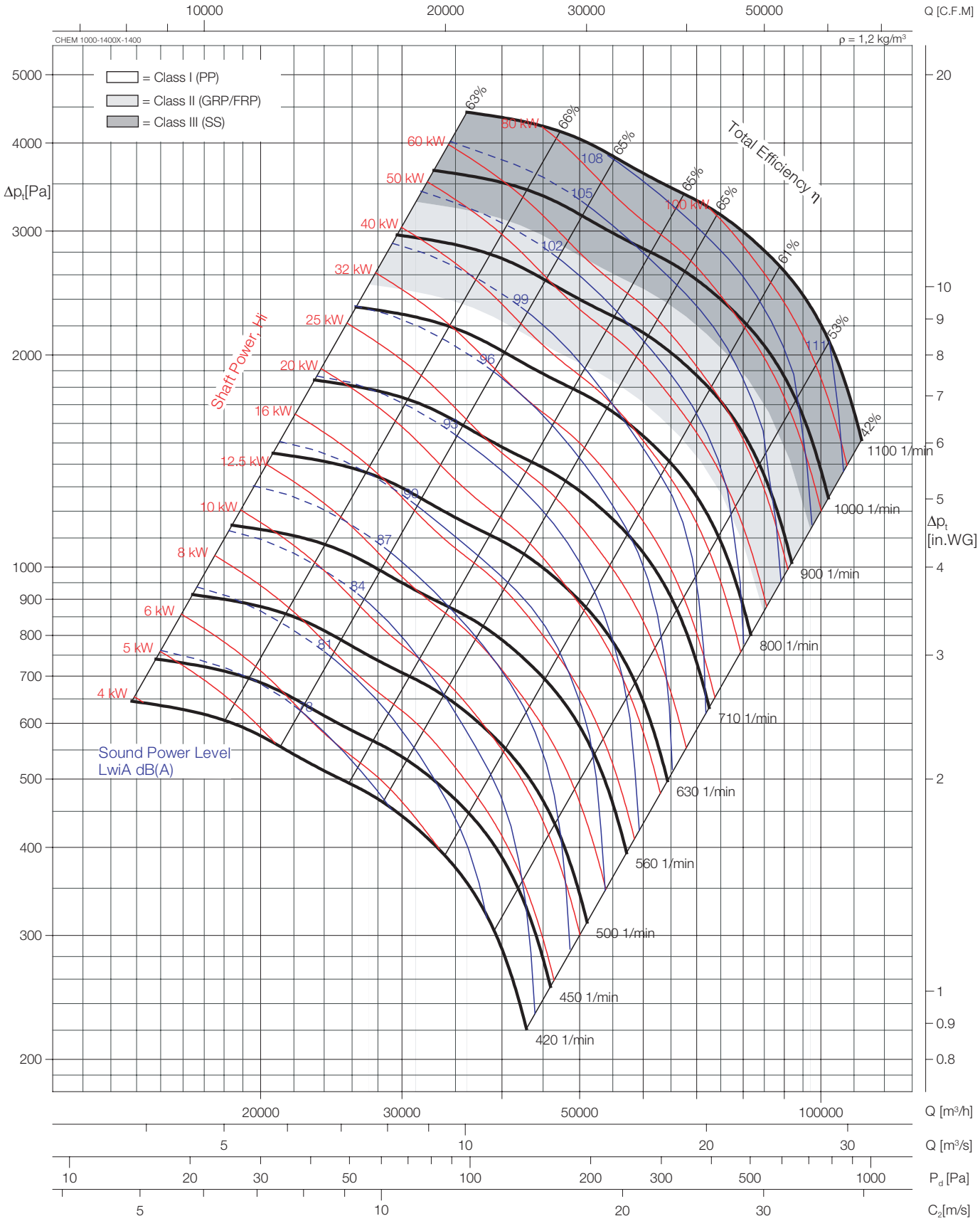

The test data were obtained in a laboratory accredited by AMCA for AMCA Standard 210 and 300.

Transmission type: direct drive and V-belt drive.

Performance certified is for installation type B - Free inlet, Ducted outlet. Power Rating (kW) does not include transmission losses, Performance ratings do not include the effects of accessories.

The A-weighted sound ratings shown have been calculated per AMCA International Standard 301. Values shown are for inlet LwiA sound power levels for installation Type B: free inlet, ducted outlet.

Sound power levels shown as dashed lines are not licensed to bear the AMCA seal.

Impeller diameter	D =	1405	mm
Number of blades	z =	12	
Max.Speed Class I (PP)	n_{max} =	830	1/min
Max.Speed Class II (GRP/FRP)	n_{max} =	950	1/min
Max.Speed Class III (SS)	n_{max} =	1100	1/min

CHEM 1120-1400X-1400

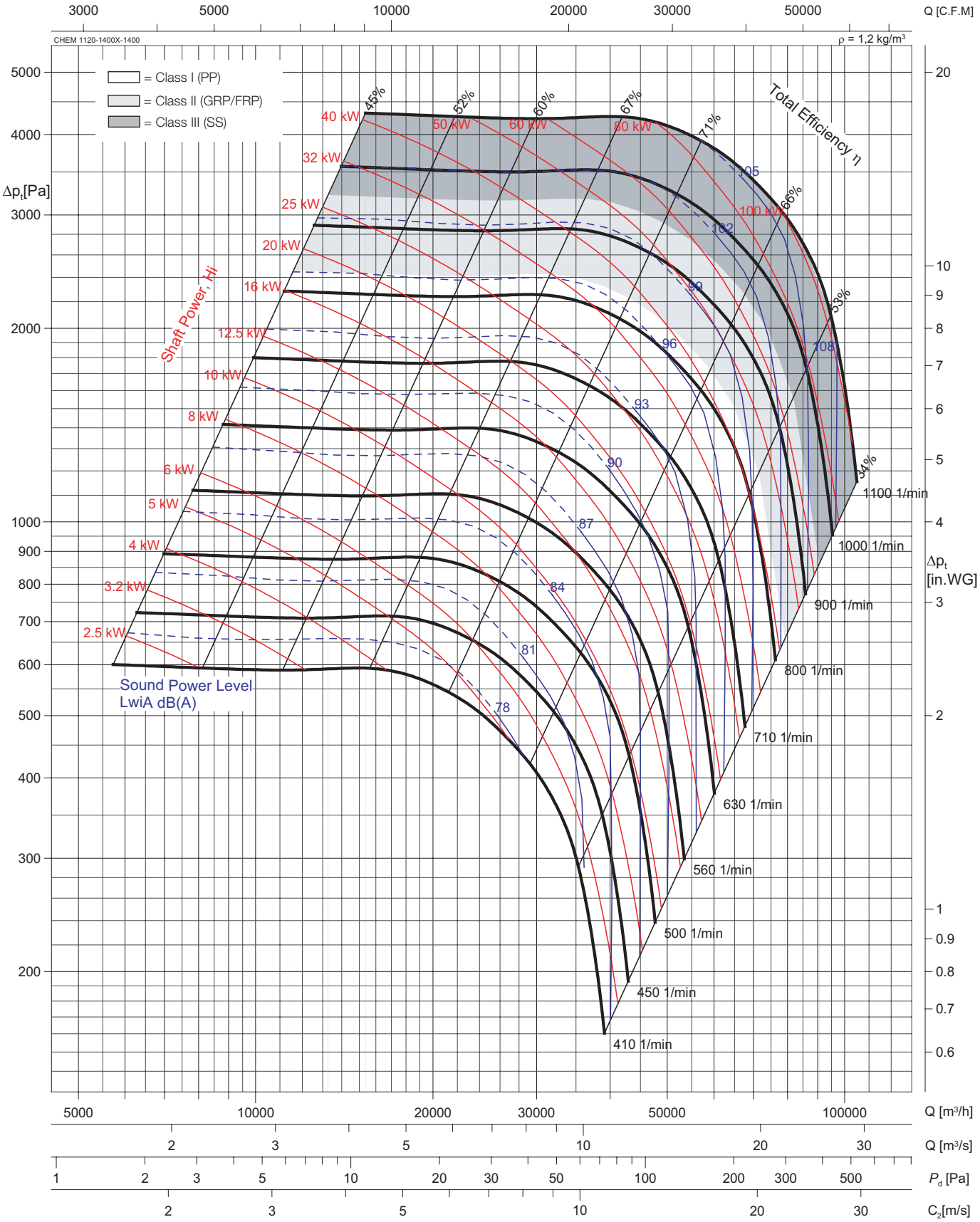

The test data were obtained in a laboratory accredited by AMCA for AMCA Standard 210 and 300.

Transmission type: direct drive and V-belt drive.

Performance certified is for installation type B - Free inlet, Ducted outlet. Power Rating (kW) does not include transmission losses, Performance ratings do not include the effects of accessories.

The A-weighted sound ratings shown have been calculated per AMCA International Standard 301. Values shown are for inlet LwiA sound power levels for installation Type B: free inlet, ducted outlet.

Sound power levels shown as dashed lines are not licensed to bear the AMCA seal.

Impeller diameter	D =	1405	mm
Number of blades	z =	12	
Max.Speed Class I (PP)	n_{max} =	830	1/min
Max.Speed Class II (GRP/FRP)	n_{max} =	950	1/min
Max.Speed Class III (SS)	n_{max} =	1100	1/min

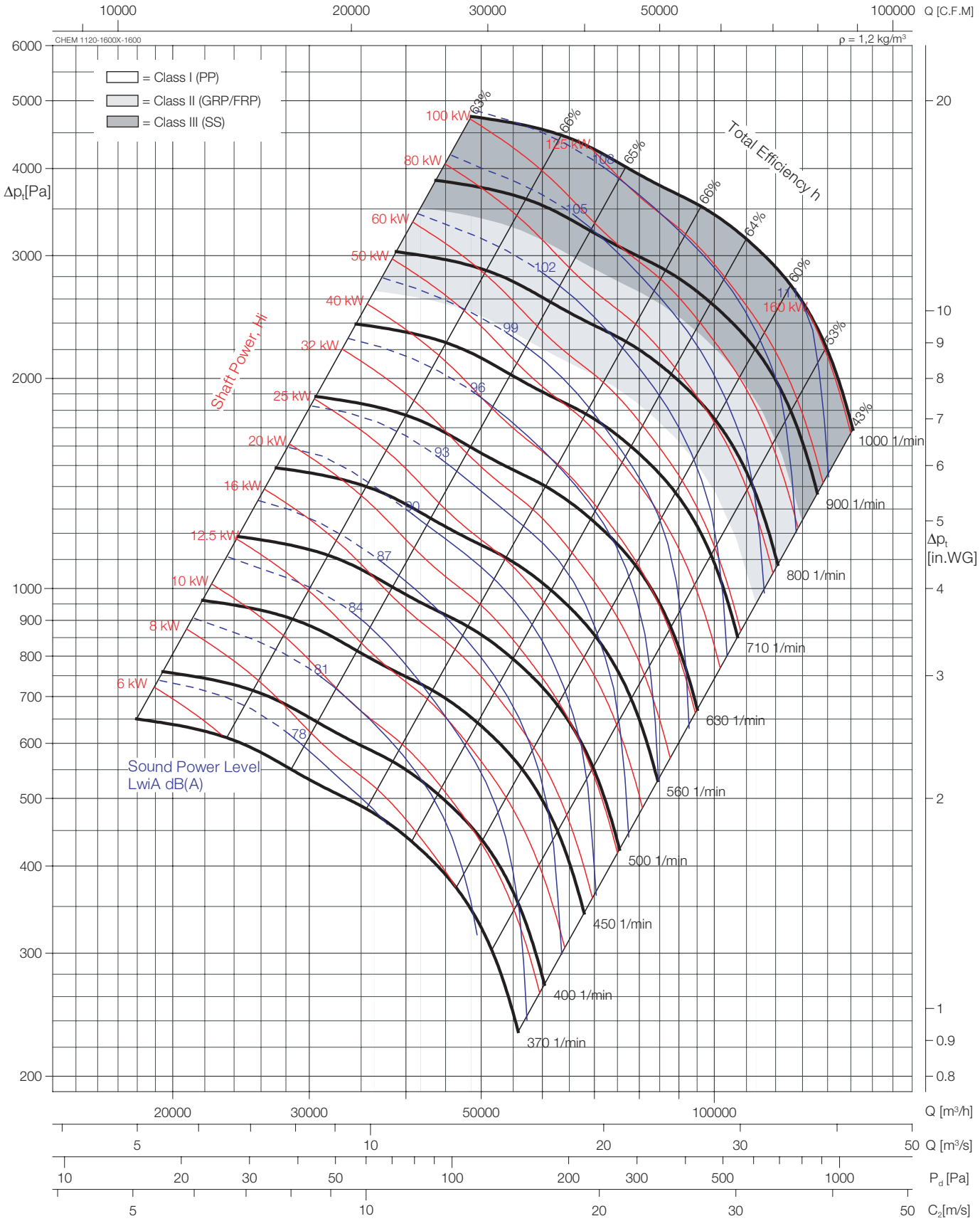

The test data were obtained in a laboratory accredited by AMCA for AMCA Standard 210 and 300.

Transmission type: direct drive and V-belt drive.

Performance certified is for installation type B - Free inlet, Ducted outlet. Power Rating (kW) does not include transmission losses, Performance ratings do not include the effects of accessories.

The A-weighted sound ratings shown have been calculated per AMCA International Standard 301. Values shown are for inlet LwiA sound power levels for installation Type B: free inlet, ducted outlet.

Sound power levels shown as dashed lines are not licensed to bear the AMCA seal.

Impeller diameter	D =	1605	mm
Number of blades	z =	12	
Max.Speed Class I (PP)	n_{max} =	750	1/min
Max.Speed Class II (GRP/FRP)	n_{max} =	860	1/min
Max.Speed Class III (SS)	n_{max} =	1000	1/min

CHEM 1250-1600X-1600

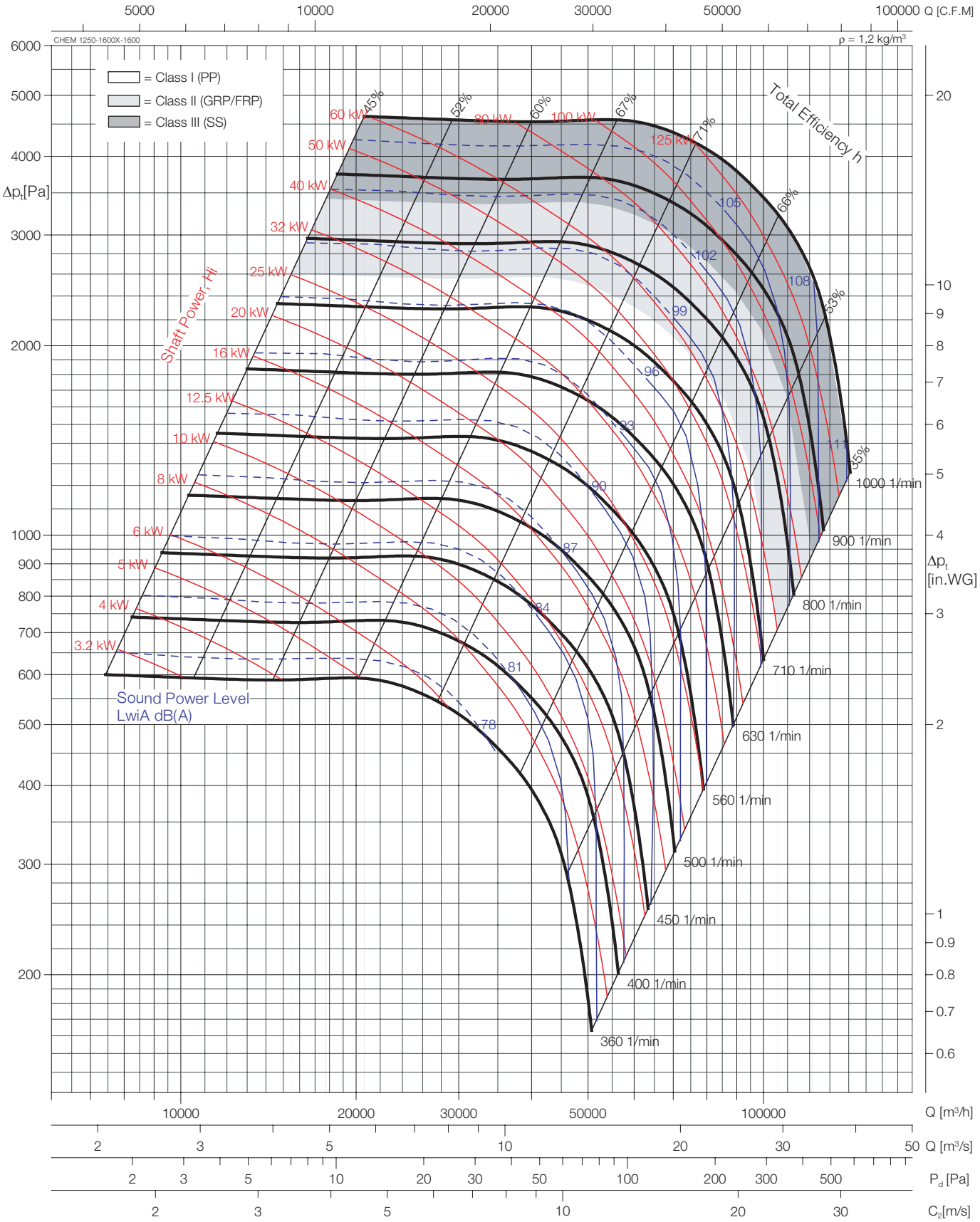

The test data were obtained in a laboratory accredited by AMCA for AMCA Standard 210 and 300.

Transmission type: direct drive and V-belt drive.

Performance certified is for installation type B - Free inlet, Ducted outlet. Power Rating (kW) does not include transmission losses, Performance ratings do not include the effects of accessories.

The A-weighted sound ratings shown have been calculated per AMCA International Standard 301. Values shown are for inlet LwiA sound power levels for installation Type B: free inlet, ducted outlet.

Sound power levels shown as dashed lines are not licensed to bear the AMCA seal.

Impeller diameter	D =	1605	mm
Number of blades	z =	12	
Max.Speed Class I (PP)	n_{max} =	750	1/min
Max.Speed Class II (GRP/FRP)	n_{max} =	860	1/min
Max.Speed Class III (SS)	n_{max} =	1000	1/min

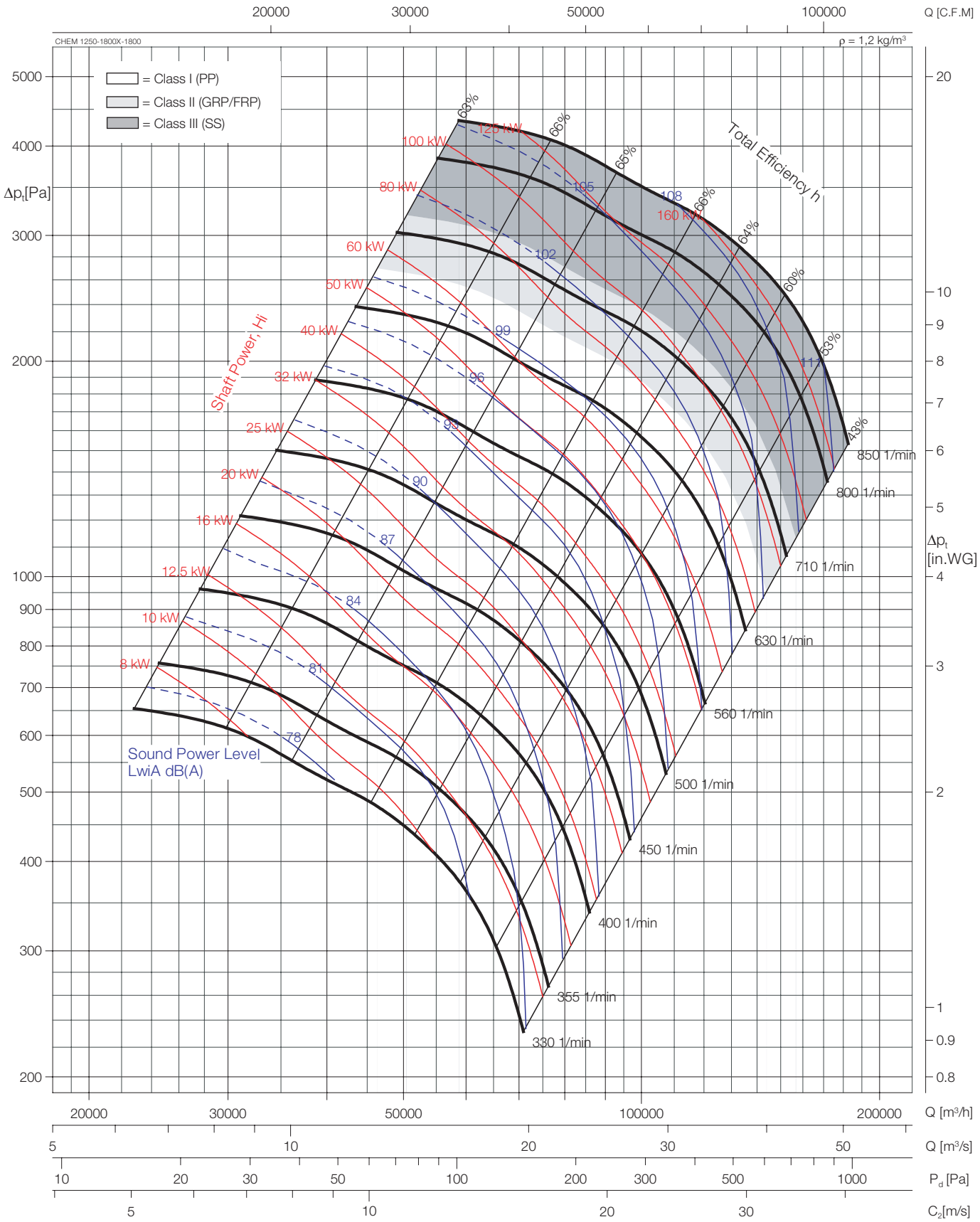

The test data were obtained in a laboratory accredited by AMCA for AMCA Standard 210 and 300.

Transmission type: direct drive and V-belt drive.

Performance certified is for installation type B - Free inlet, Ducted outlet. Power Rating (kW) does not include transmission losses, Performance ratings do not include the effects of accessories.

The A-weighted sound ratings shown have been calculated per AMCA International Standard 301. Values shown are for inlet LwiA sound power levels for installation Type B: free inlet, ducted outlet.

Sound power levels shown as dashed lines are not licensed to bear the AMCA seal.

Impeller diameter	D =	1805	mm
Number of blades	z =	12	
Max.Speed Class I (PP)	n_{max} =	670	1/min
Max.Speed Class II (GRP/FRP)	n_{max} =	730	1/min
Max.Speed Class III (SS)	n_{max} =	850	1/min

Introducing the Fan Energy Index

The FEI is a ratio of the actual fan efficiency to a baseline fan efficiency, both calculated at a given airflow and pressure point (FEI_S is calculated using a static pressure basis, FEI_T is calculated using a total pressure basis). Since these efficiencies are each calculated at the same airflow and pressure, FEI is also defined as the ratio of the baseline electrical power to the actual electrical power of a fan.

The FEI was designed to encourage responsible application of fans and drive significant and quantifiable energy savings through energy codes, utility rebate programs and federal regulations. This is accomplished by establishing the minimum fan efficiency or maximum fan electrical input power at design airflow and pressure. The FEI can be used by:

- Regulators to improve the efficiency of fan designs and limit market availability of less efficient fans
- Utilities to establish rebate programs to incentivize the efficient use of fans
- Code bodies to drive building owners and contractors to using more energy efficient fans for ventilation and process applications
- Purchasing agents to evaluate the fan selections and their suitability for specific applications

Selection Example

The belt driven centrifugal fan CHEM 400-450P-453 with three-phase 50 Hz motor power supply, by plotting the FEI curve as per the right graph, the FEI_T value will be 1.44 under the duty 3,500 CMH airflow, 670 Pa total pressure running at 1,500 rpm.

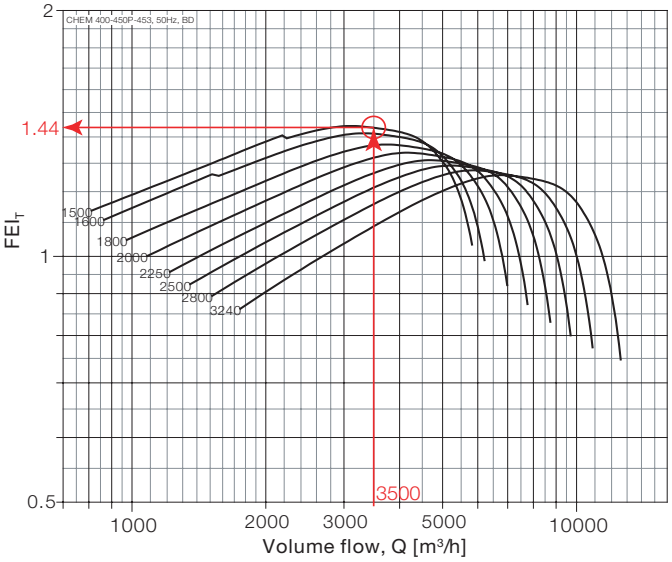

Belt Driven Models, Size from CHEM 200-315X-317 to CHEM 1250-1800X-1800, 50Hz

Model: CHEM 200-315X-317

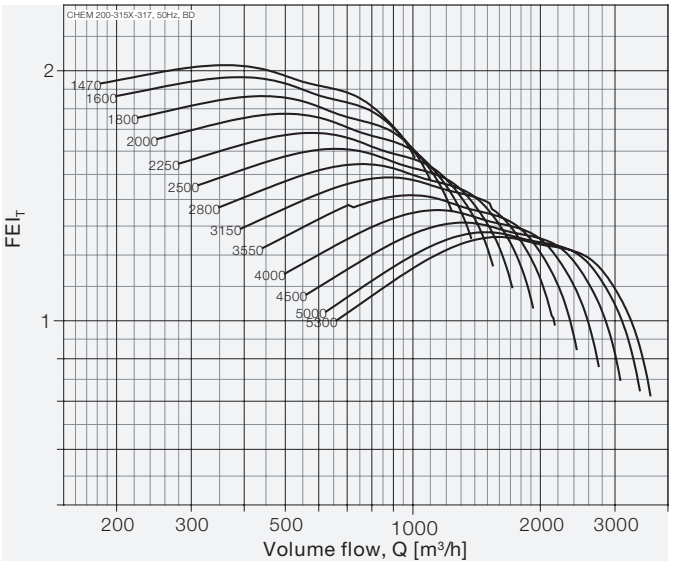

Model: CHEM 250-315P-317

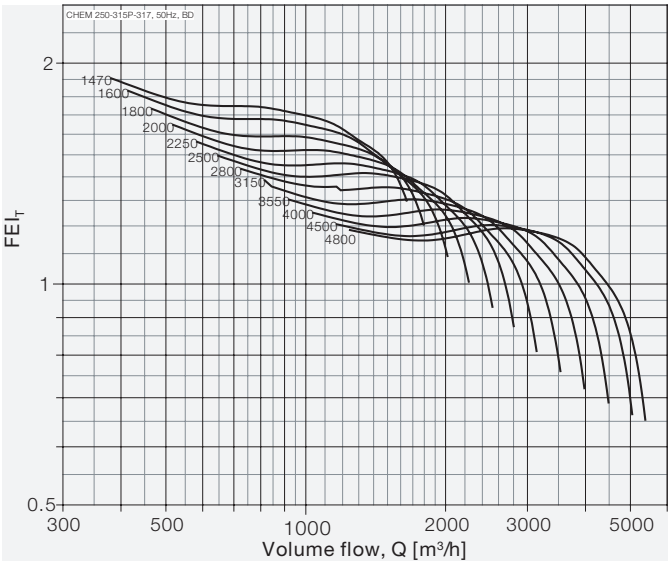

Model: CHEM 250-355P-359

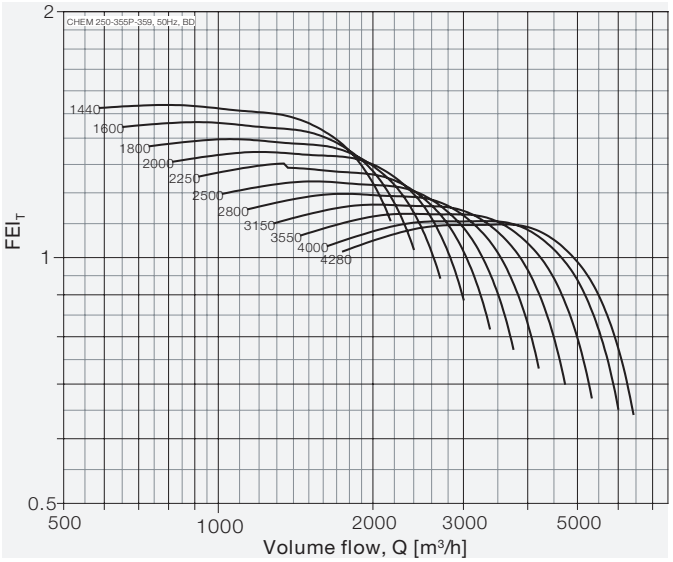

Model: CHEM 250-355X-359

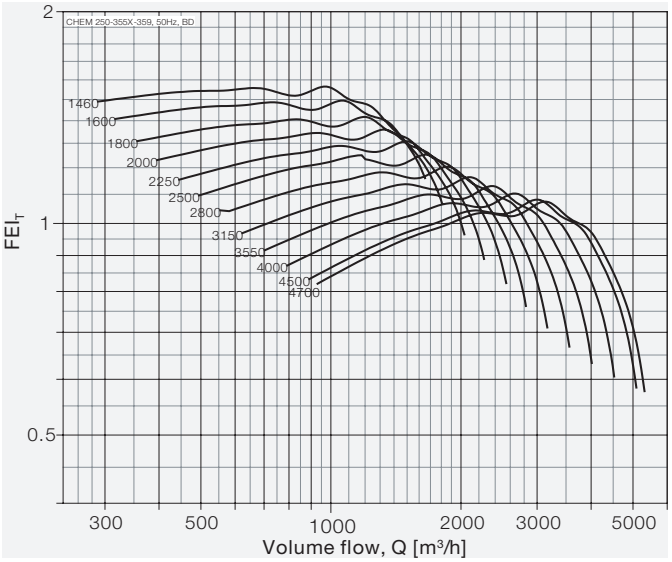

FEI_T values are calculated in accordance with ANSI/AMCA Standard 208 and are based on default motor efficiencies (Belt Driven type). FEI_T values for fans with specific motors will vary slightly from those shown. Fan speed shown in RPM.

Model: CHEM 250-400X-403

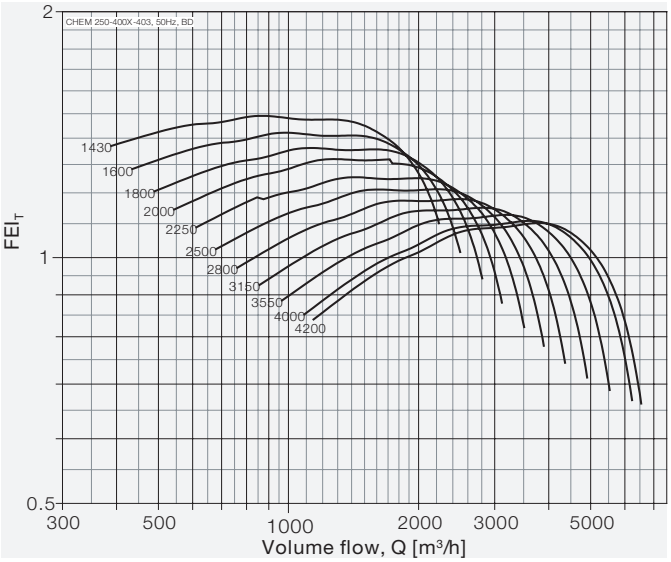

Model: CHEM 315-355P-359

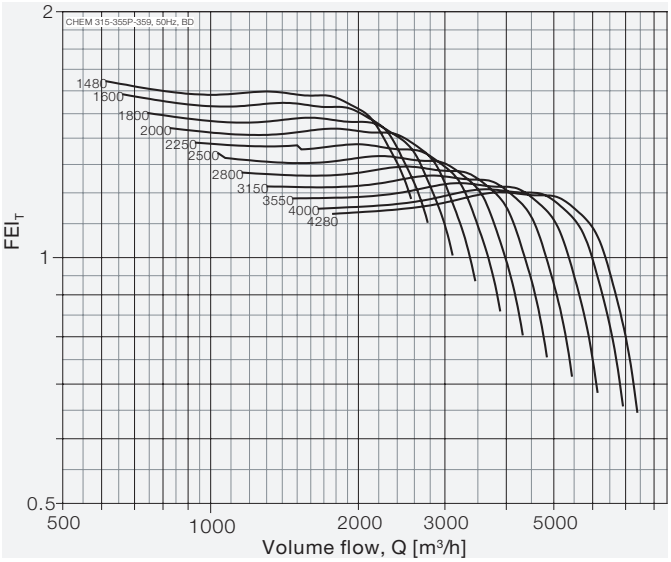

Model: CHEM 315-355X-359

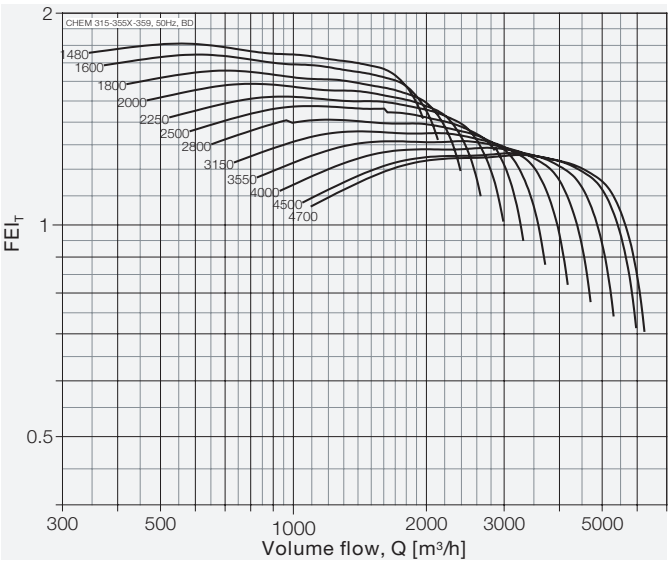

Model: CHEM 315-400P-403

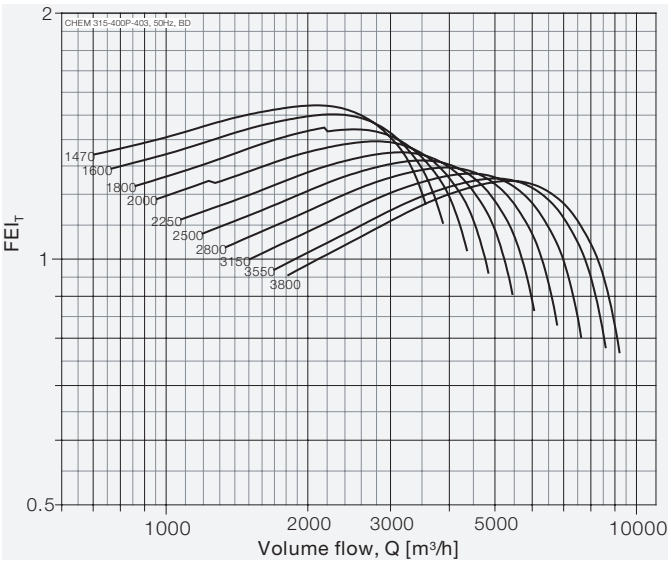

Model: CHEM 315-400X-403

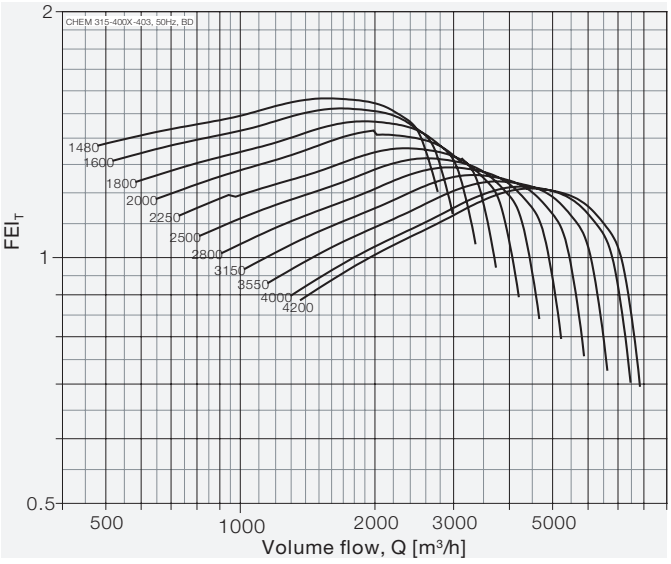

Model: CHEM 315-450P-453

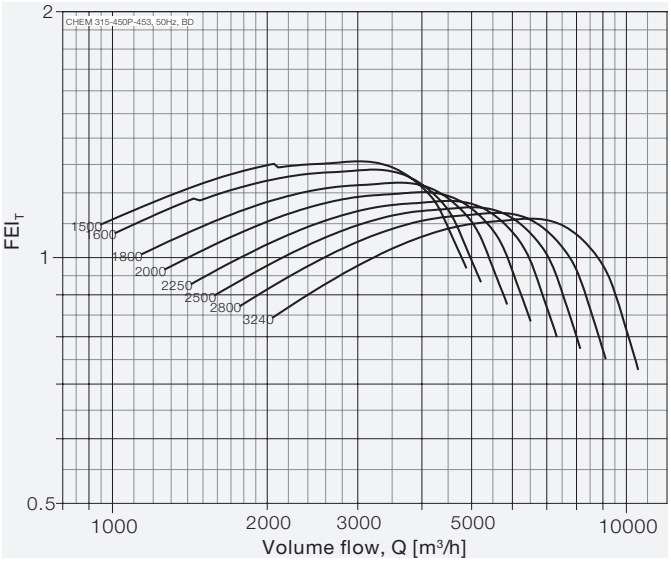

FEI$_T$ values are calculated in accordance with ANSI/AMCA Standard 208 and are based on default motor efficiencies (Belt Driven type). FEI$_T$ values for fans with specific motors will vary slightly from those shown. Fan speed shown in RPM.

Model: CHEM 315-450X-453

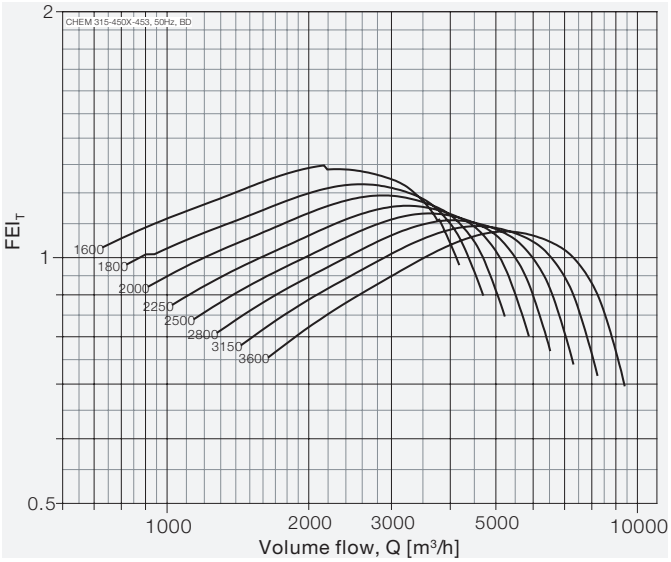

Model: CHEM 315-500X-504

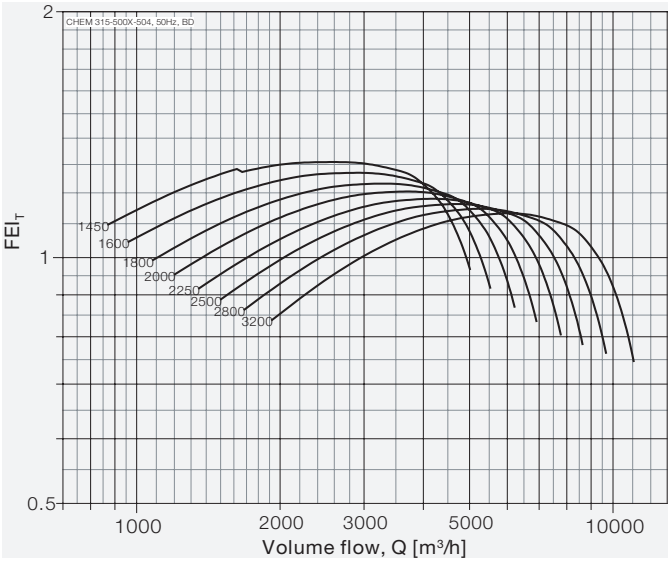

Model: CHEM 400-450P-453

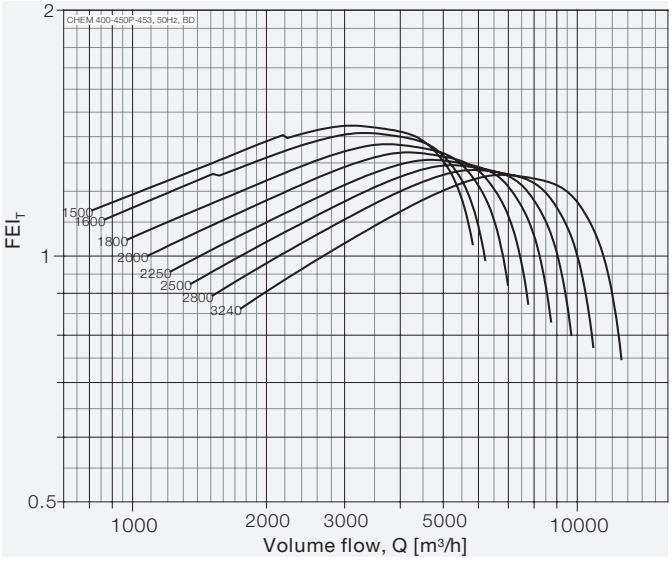

Model: CHEM 400-450X-453

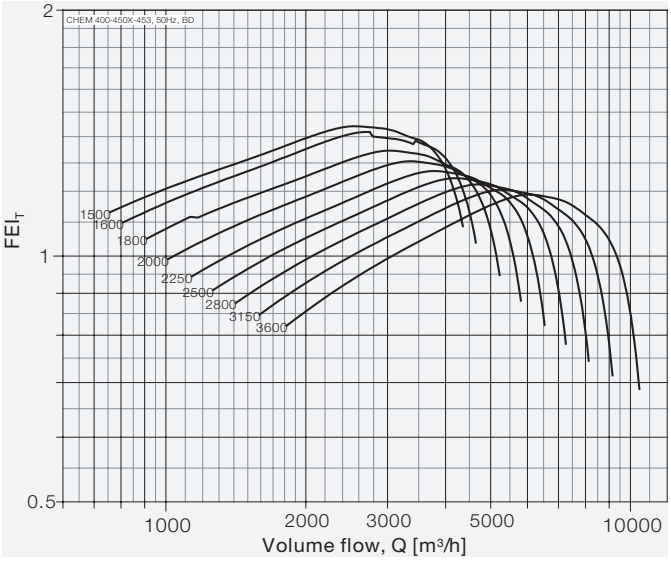

Model: CHEM 400-500P-504

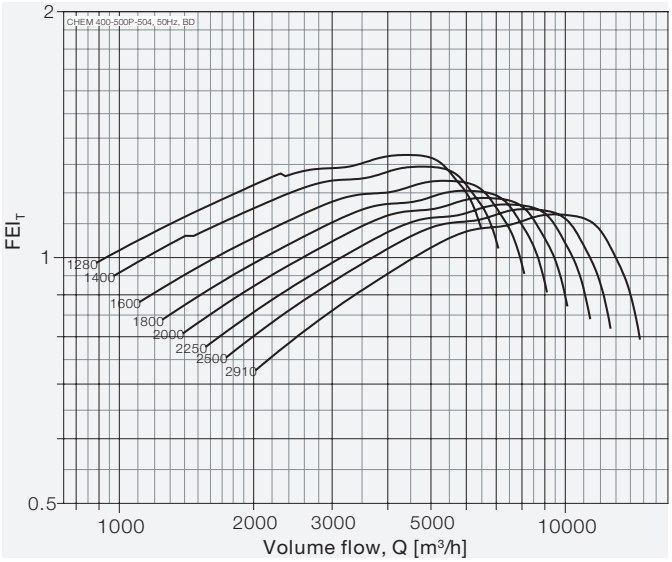

Model: CHEM 400-500X-504

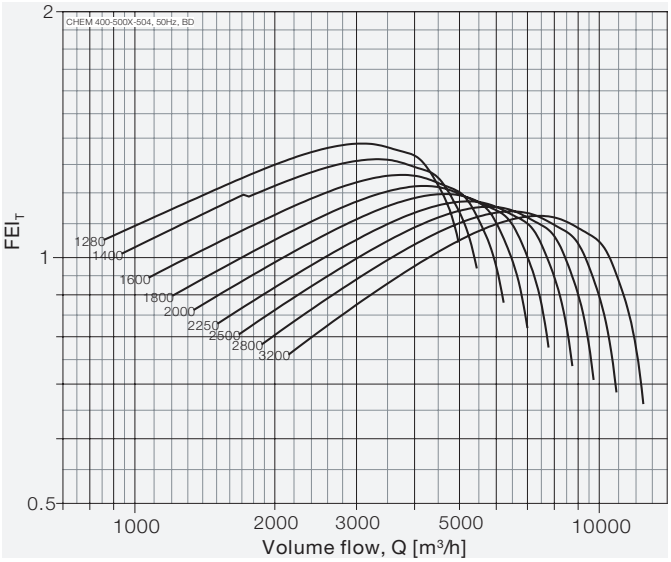

FEI_T values are calculated in accordance with ANSI/AMCA Standard 208 and are based on default motor efficiencies (Belt Driven type). FEI_T values for fans with specific motors will vary slightly from those shown. Fan speed shown in RPM.

Model: CHEM 400-560X-570

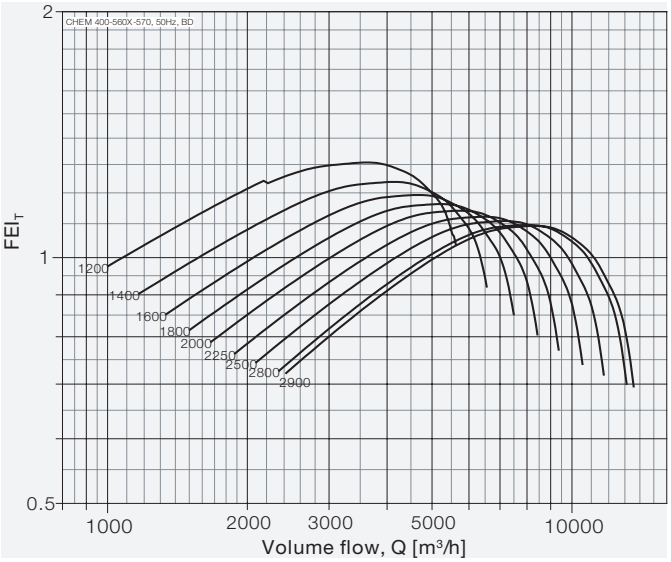

Model: CHEM 450-500P-504

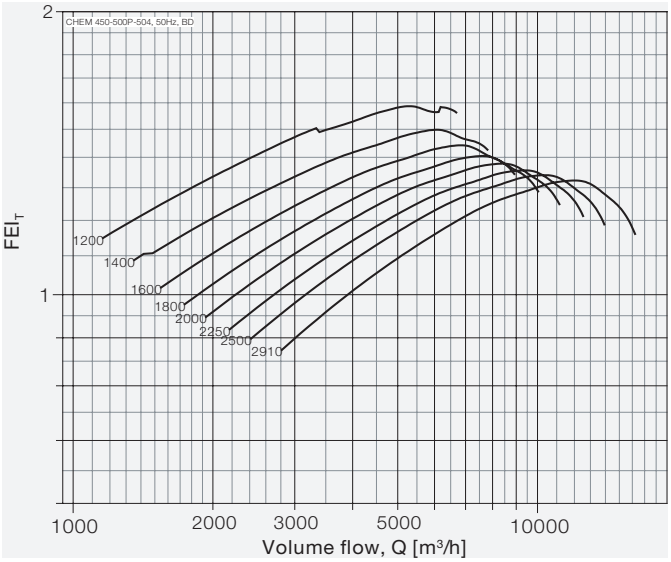

Model: CHEM 450-560P-570

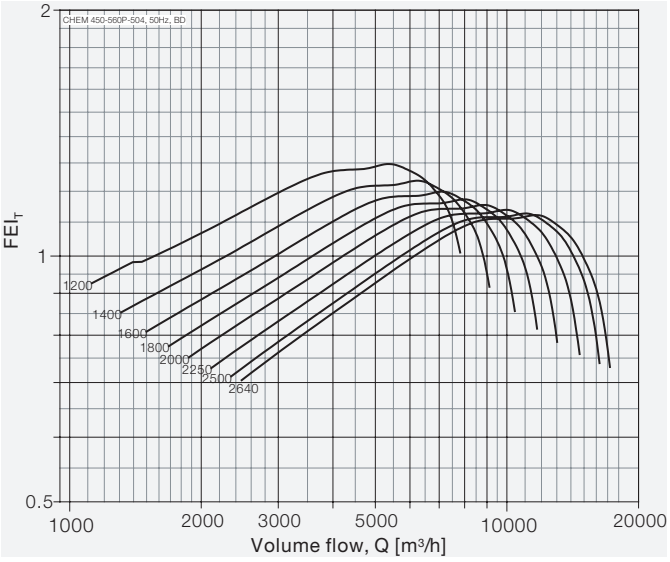

Model: CHEM 450-560X-570

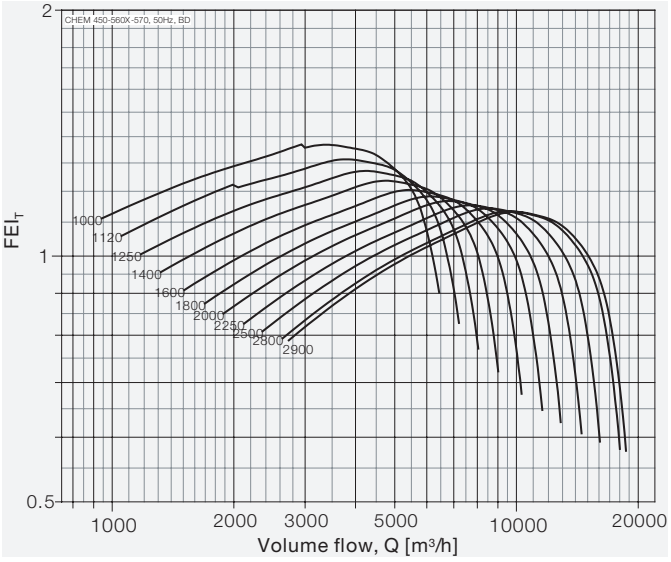

Model: CHEM 450-630X-631

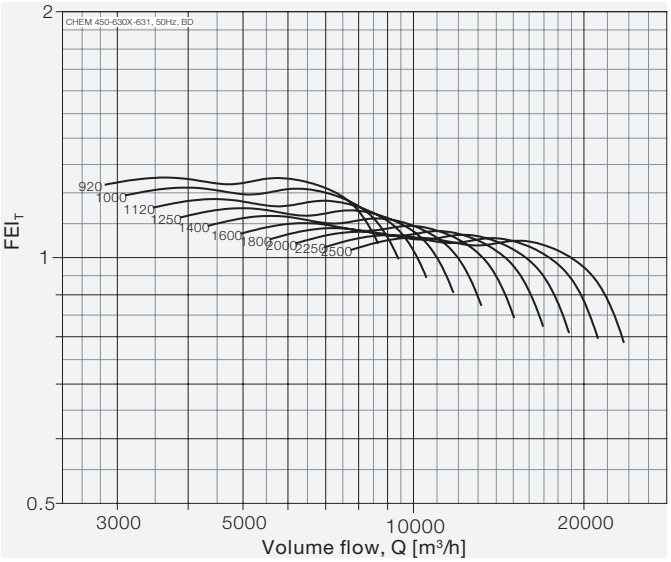

Model: CHEM 500-630X-631

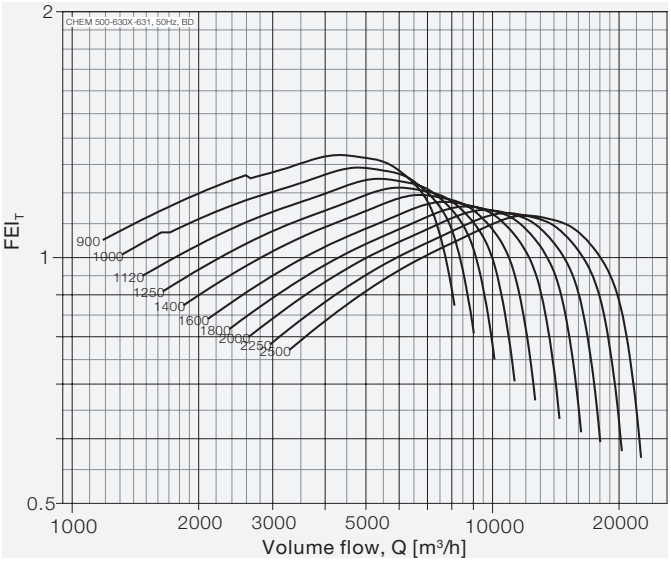

FEI$_T$ values are calculated in accordance with ANSI/AMCA Standard 208 and are based on default motor efficiencies (Belt Driven type). FEI$_T$ values for fans with specific motors will vary slightly from those shown. Fan speed shown in RPM.

Model: CHEM 500-710X-722

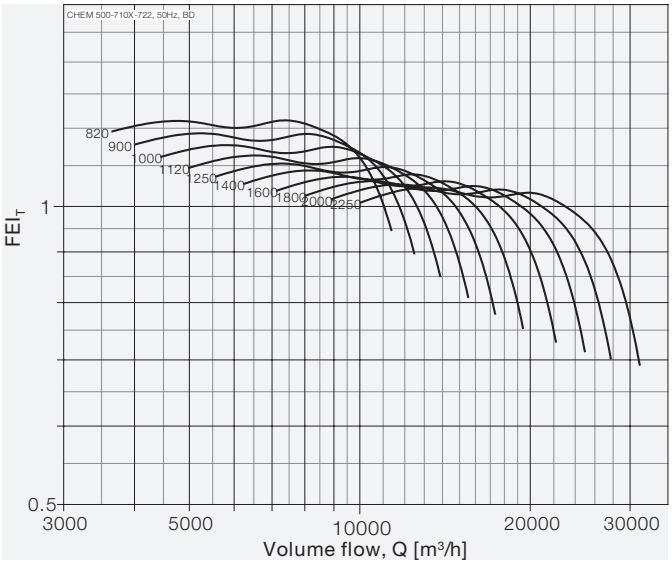

Model: CHEM 560-710X-722

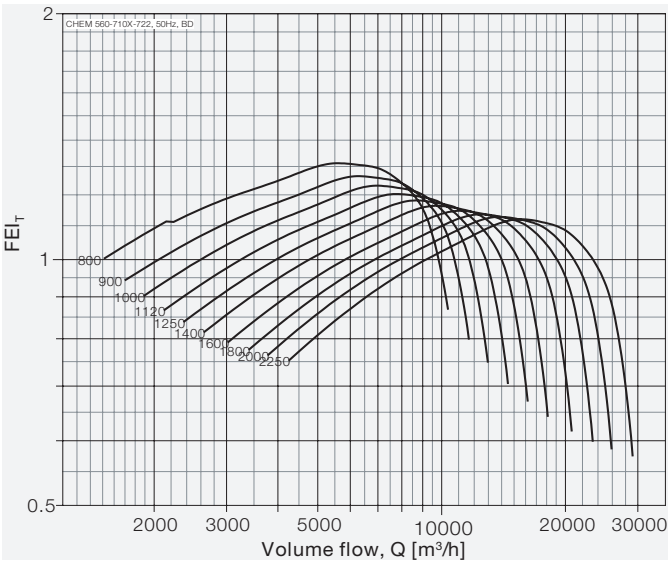

Model: CHEM 560-800X-824

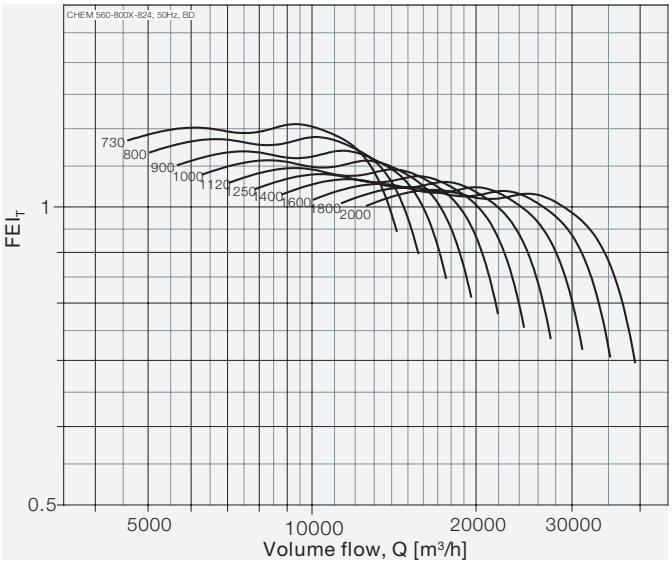

Model: CHEM 630-800X-824

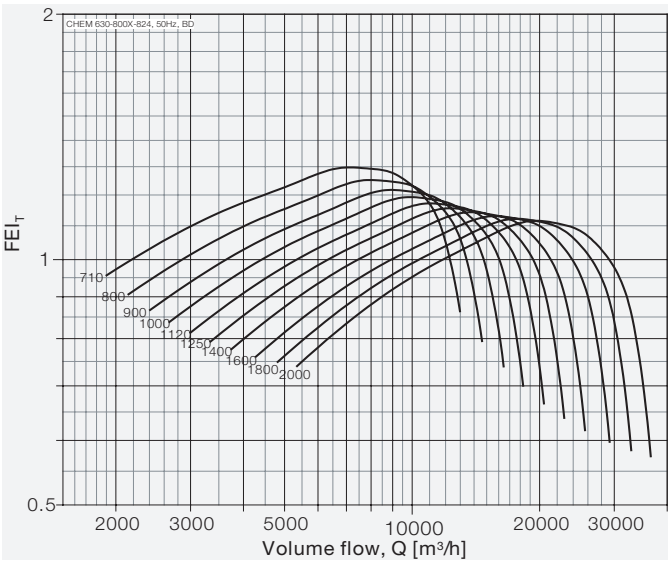

Model: CHEM 630-900X-912

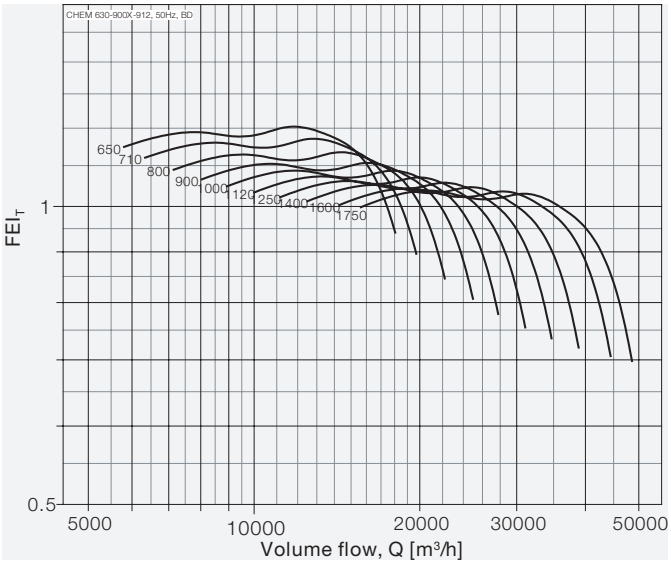

Model: CHEM 710-900X-912

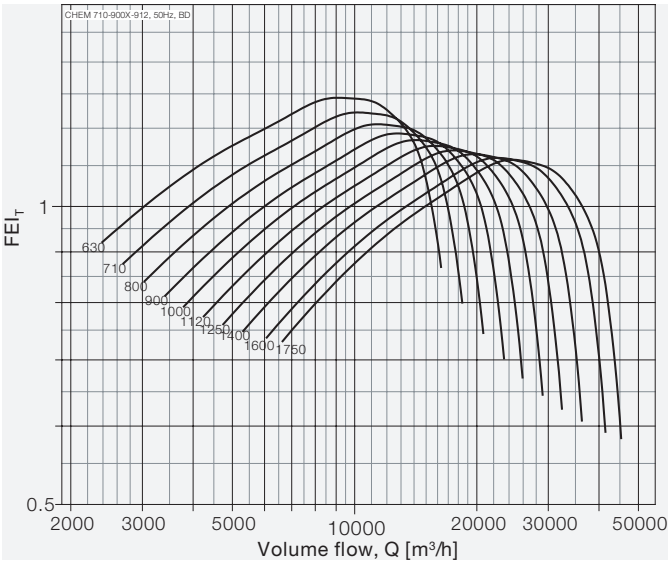

FEI_T values are calculated in accordance with ANSI/AMCA Standard 208 and are based on default motor efficiencies (Belt Driven type). FEI_T values for fans with specific motors will vary slightly from those shown. Fan speed shown in RPM.

Model: CHEM 710-1000X-1000

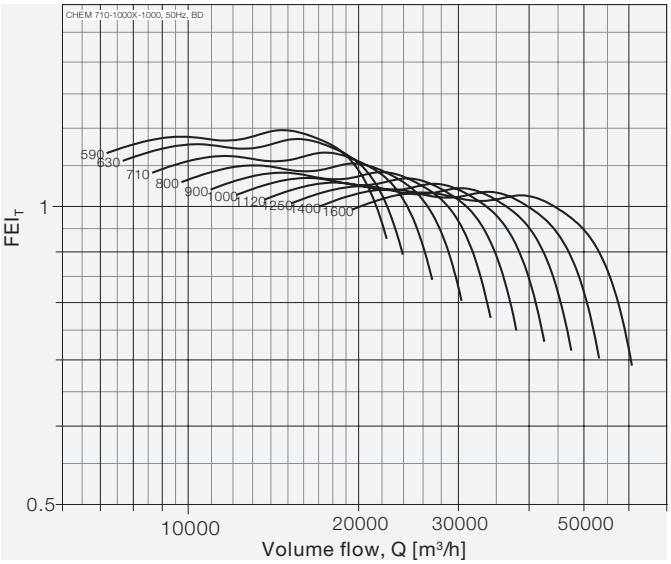

Model: CHEM 800-1000X-1000

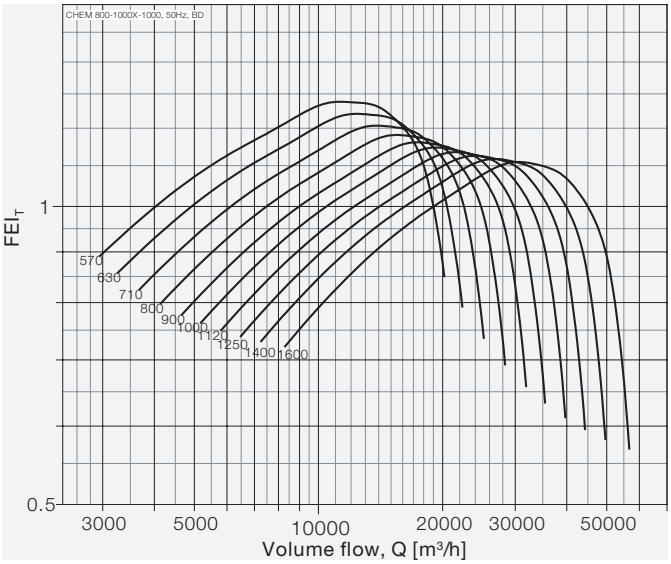

Model: CHEM 710-1000X-1000

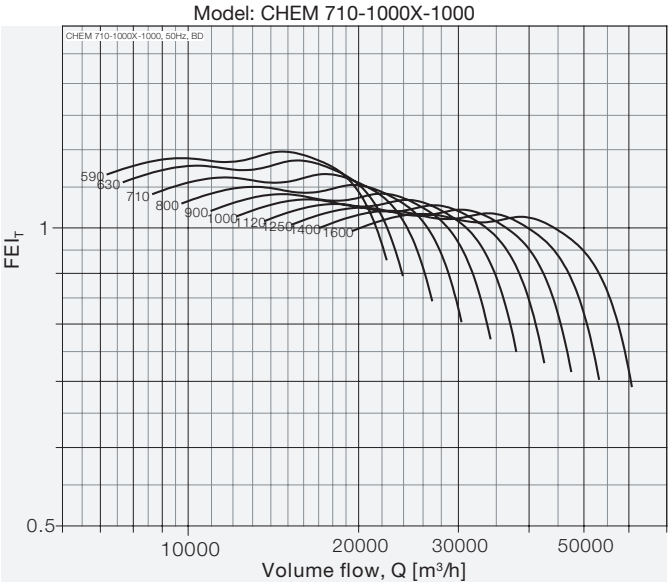

Model: CHEM 800-1000X-1000

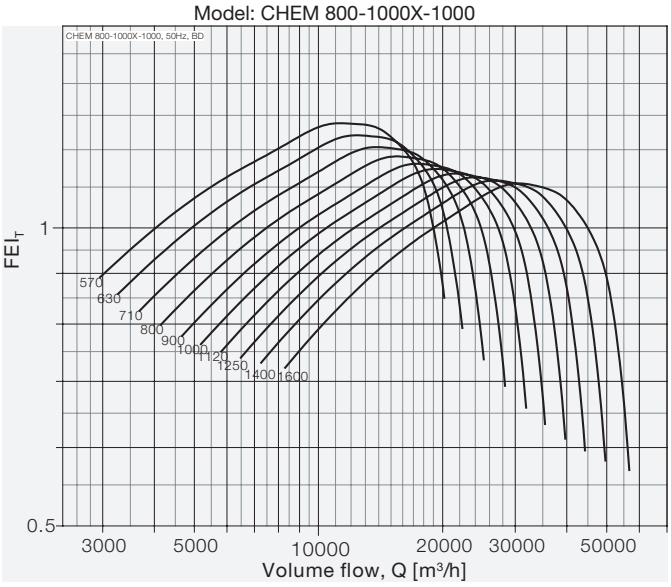

Model: CHEM 800-1120X-1120

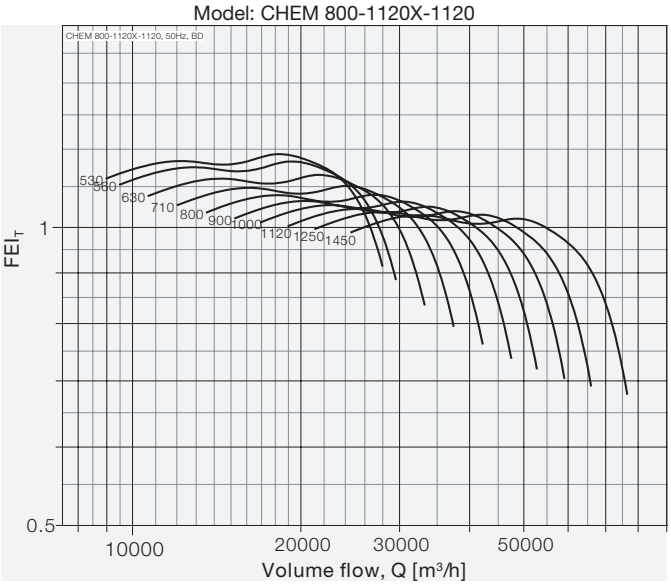

Model: CHEM 900-1120X-1120

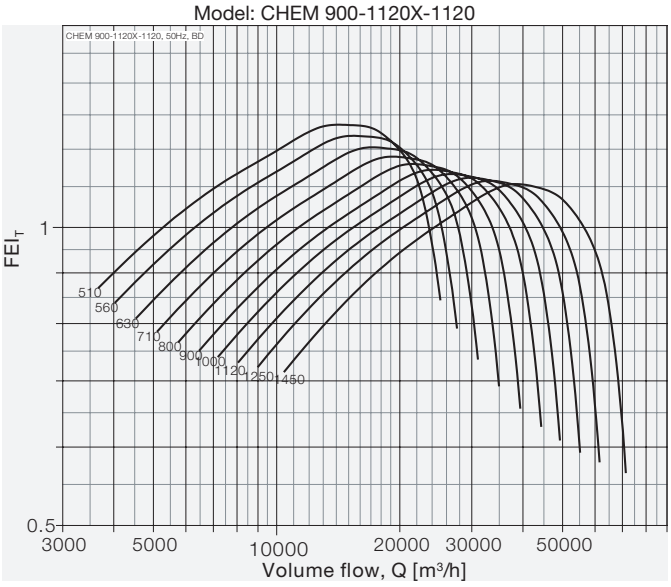

FEI_T values are calculated in accordance with ANSI/AMCA Standard 208 and are based on default motor efficiencies (Belt Driven type). FEI_T values for fans with specific motors will vary slightly from those shown. Fan speed shown in RPM.

Model: CHEM 900-1250X-1250

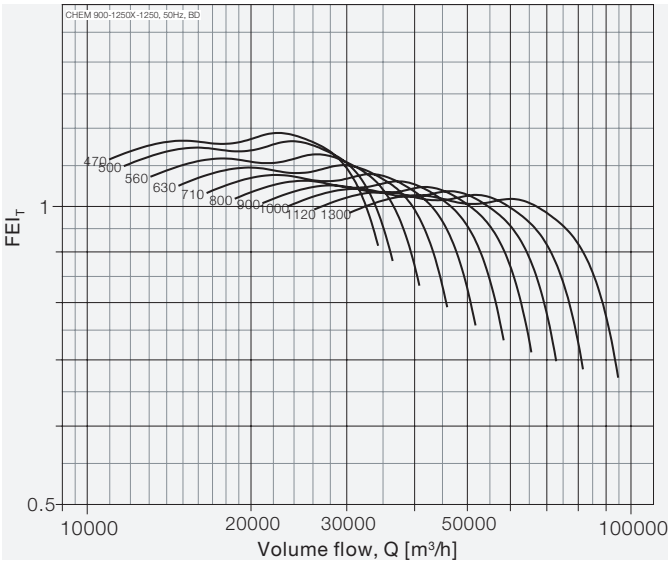

Model: CHEM 1000-1250X-1250

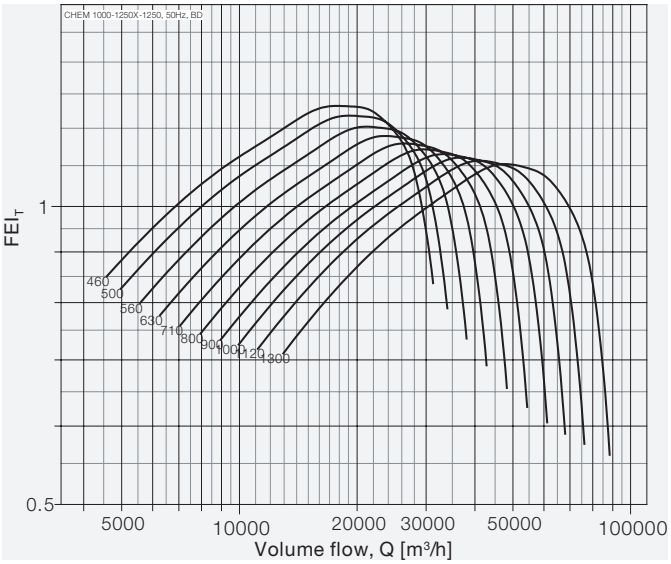

Model: CHEM 1000-1400X-1400

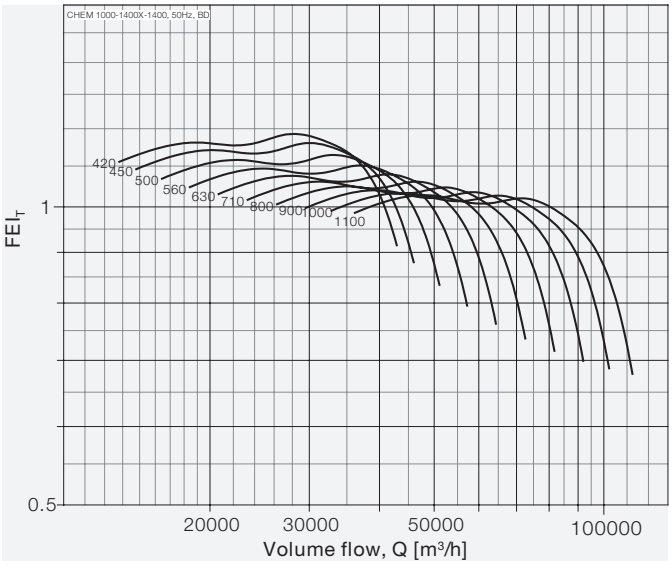

Model: CHEM 1120-1400X-1400

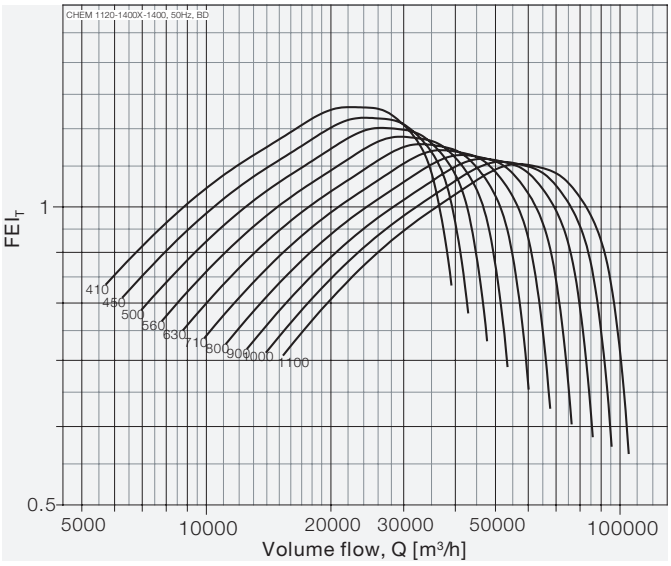

Model: CHEM 1120-1600X-1600

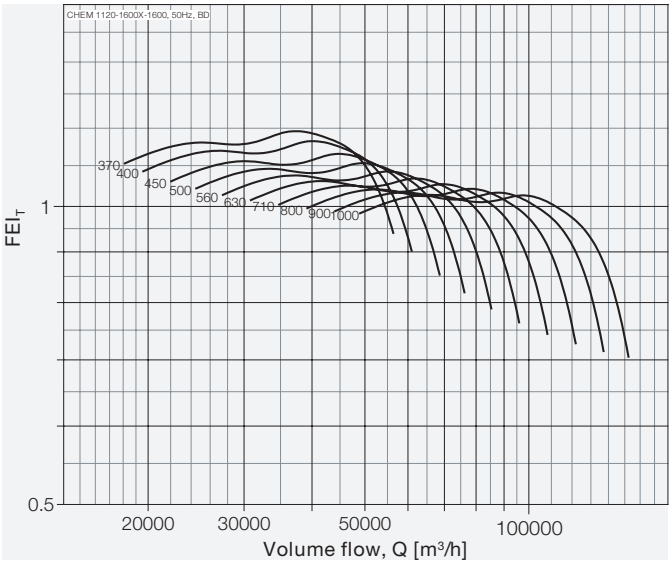

Model: CHEM 1250-1600X-1600

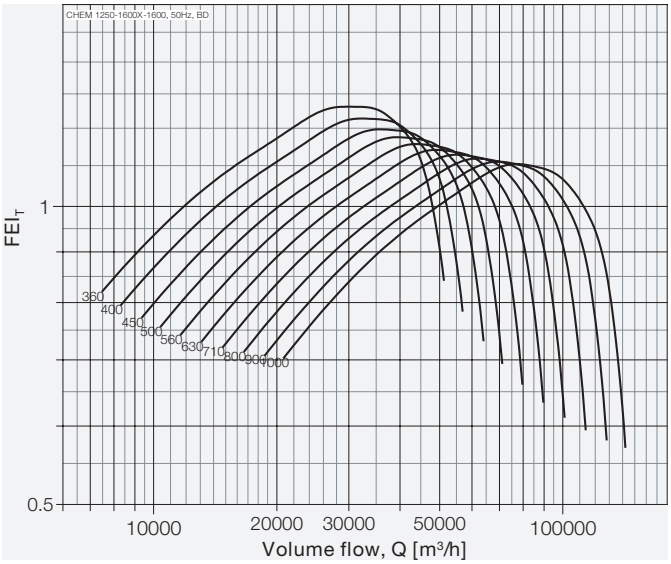

FEI_T values are calculated in accordance with ANSI/AMCA Standard 208 and are based on default motor efficiencies (Belt Driven type). FEI_T values for fans with specific motors will vary slightly from those shown. Fan speed shown in RPM.

Model: CHEM 1250-1800X-1800

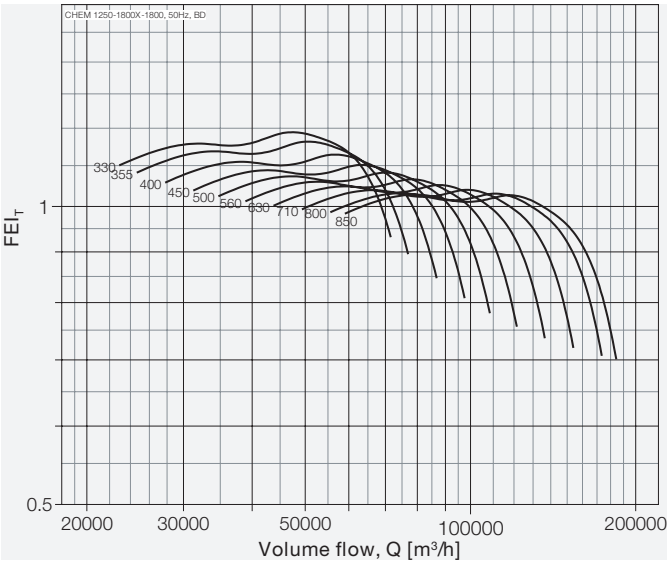

Performance certified is for installation type B - Free inlet, Ducted outlet. Power rating (kW) does not include transmission losses. Performance ratings do not include the effects of appurtenances (accessories-belt cover, pulley & belt). FEI_T values are calculated in accordance with ANSI/AMCA Standard 208 and are based on default motor efficiencies (Belt Driven type). FEI_T values for fans with specific motors will vary slightly from those shown. Fan speed shown in RPM.

CHEM 200-315-317
·····to·····
CHEM 450-500-504

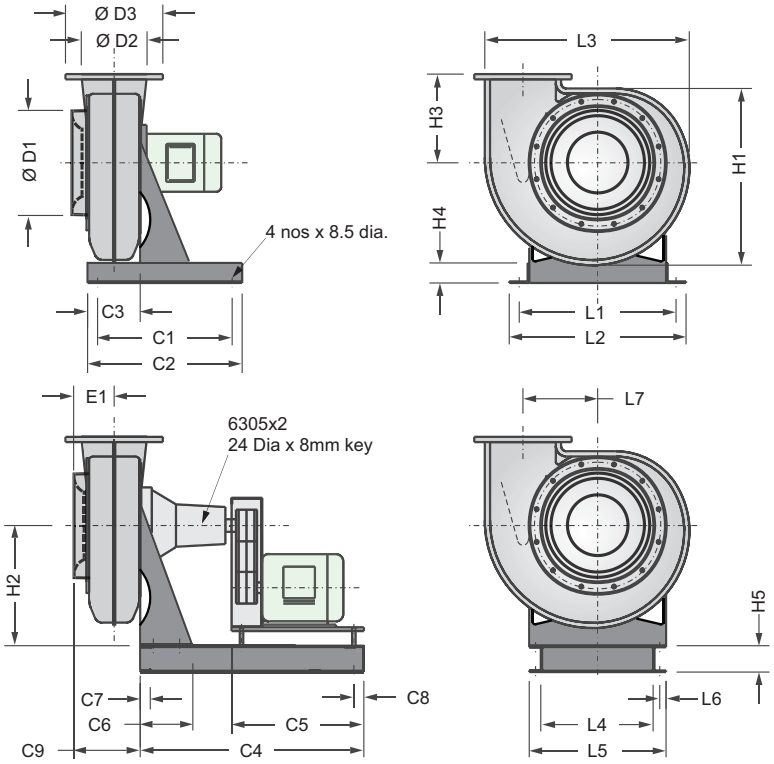

The direction of rotation is as viewed from the drive side

Model size	D1 (mm)	D2 (mm)	D3 (mm)	C1 (mm)	C2 (mm)	C3 (mm)	C4 (mm)	C5 (mm)	C6 (mm)	C7 (mm)	C8 (mm)	C9 (mm)	E1 (mm)	H1 (mm)
200-315-317	317	195	260	312	350	100	550	320	150	25	25	203	127	518
250-315-317	317	245	310	300	350	100	600	450	150	25	25	242	151	621
250-355-359	359	245	310	300	350	100	600	450	150	25	25	242	151	621
250-400-403	403	245	310	300	350	100	600	450	150	25	25	220	130	621
315-355-359	359	309	375	350	400	125	650	450	150	25	25	236	124	795
315-400-403	403	309	375	350	400	125	650	450	150	25	25	267	155	795
315-450-453	453	309	375	350	400	125	650	450	150	25	25	292	180	795
315-500-504	504	309	375	350	400	125	650	450	150	25	25	292	180	795
400-450-453	453	390	480	400	450	150	650	450	150	25	25	328	204	858
400-500-504	504	390	480	400	450	150	650	450	150	25	25	328	204	858
450-500-504	504	452	530	-	977	-	-	-	-	-	-	-	-	1082

Model size	H2a (mm)	H2b (mm)	H3 (mm)	H4 (mm)	H5 (mm)	L1 (mm)	L2 (mm)	L3 (mm)	L4 (mm)	L5 (mm)	L6 (mm)	L7 (mm)	(kg)
200-315-317	364	500	271	20	50	453	491	590	345	415	12	204	41.9
250-315-317	454	633	320	30	80	568	618	723	442	518	19	261	50.3
250-355-359	454	633	320	30	80	568	618	723	442	518	19	261	50.5
250-400-403	454	633	320	30	80	568	618	723	442	518	19	261	50.7
315-355-359	530	720	464	50	80	659	709	930	533	609	19	358	73.1
315-400-403	530	720	464	50	80	659	709	930	533	609	19	358	73.8
315-450-453	530	720	464	50	80	659	709	930	533	609	19	358	75.0
315-500-504	530	720	464	50	80	659	709	930	533	609	19	358	76.1
400-450-453	557	750	510	50	80	721	771	1003	595	671	19	357	102
400-500-504	557	750	510	50	80	721	771	1003	595	671	19	357	104
450-500-504	685	800	532	80	80	858	808	1208	808	858	25	408	132

We reserve the right to alter measurements without notice in case of technical improvements

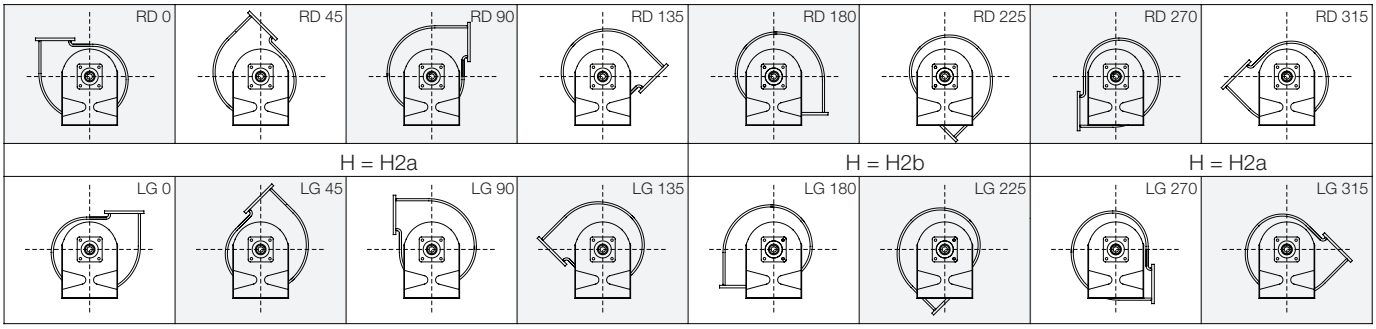

CHEM 400-560-570
·····to·····
CHEM 450-630-631

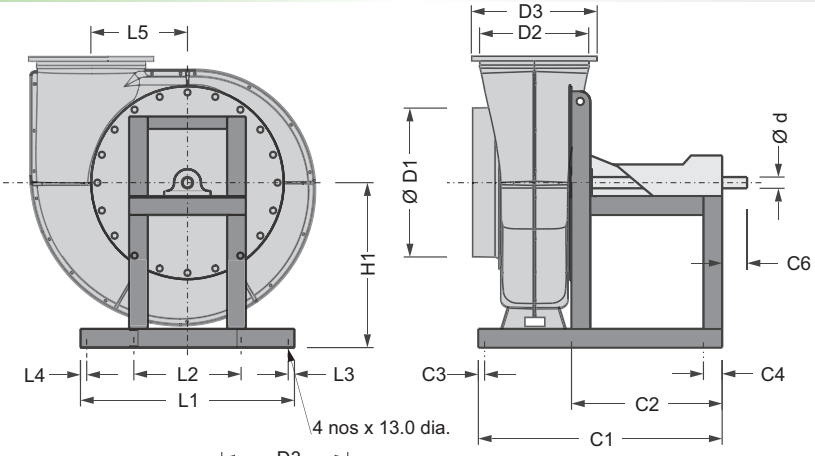

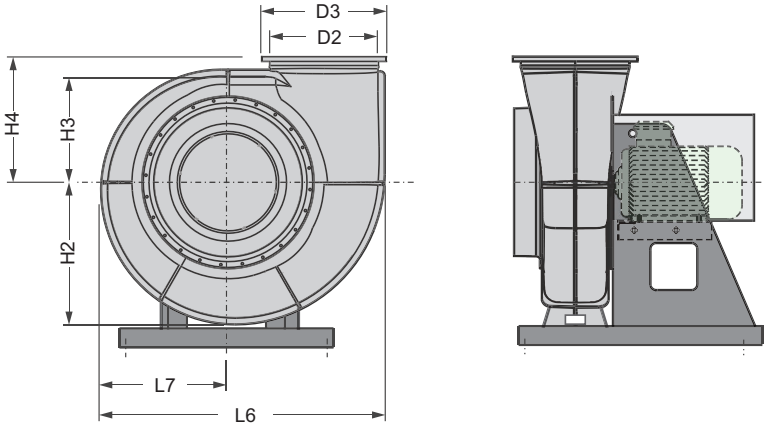

d [mm]	Key [mm]
45	14 x 9

The direction of rotation is as viewed from the drive side;
= Barefan weight approximatly

Model size	D1 [mm]	D2 [mm]	D3 [mm]	d [mm]	C1 [mm]	C2 [mm]	C3 [mm]	C4 [mm]	C5 [mm]	C6 [mm]	H1a [mm]	H1b [mm]	H1c [mm]
400-560-570	570	390	480	45	920	612	19	75	-	100	632	577	TBA
450-500-504	504	452	530	45	977	604	19	75	-	100	685	598	TBA
450-560-570	570	452	530	45	977	604	19	75	-	100	685	598	TBA
450-630-631	632	452	530	45	977	604	19	75	-	100	685	598	TBA

Model size	H1d [mm]	H1e [mm]	H2 [mm]	H3 [mm]	H4 [mm]	L1 [mm]	L2 [mm]	L3 [mm]	L4 [mm]	L5 [mm]	L6 [mm]	L7 [mm]	(kg)
400-560-570	690	660	526	383	464	774	428	25	25	357	1056	471	105
450-500-504	800	700	603	479	532	858	430	25	25	408	1208	541	147
450-560-570	800	700	603	479	532	858	430	25	25	408	1208	541	149
450-630-631	800	700	603	479	532	858	430	25	25	408	1208	541	152

We reserve the right to alter measurements without notice in case of technical improvements

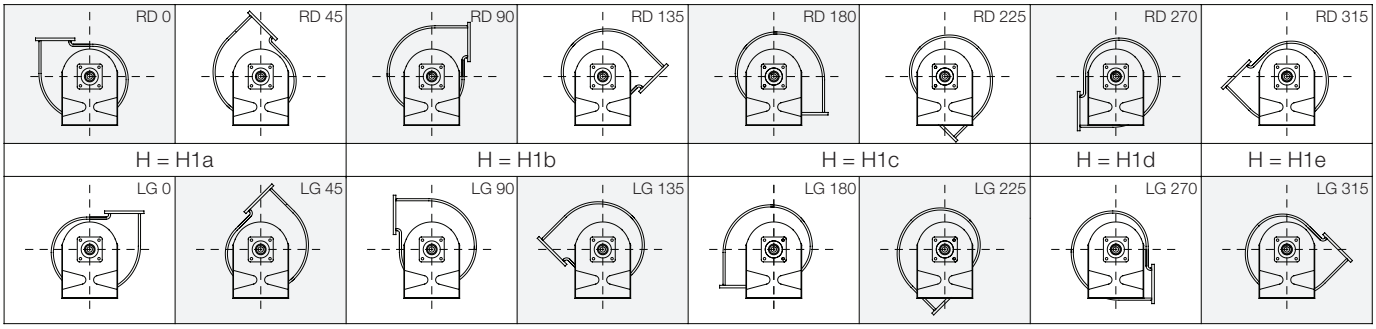

CHEM 500-630-631
·····to·····
CHEM 710-1000-1000

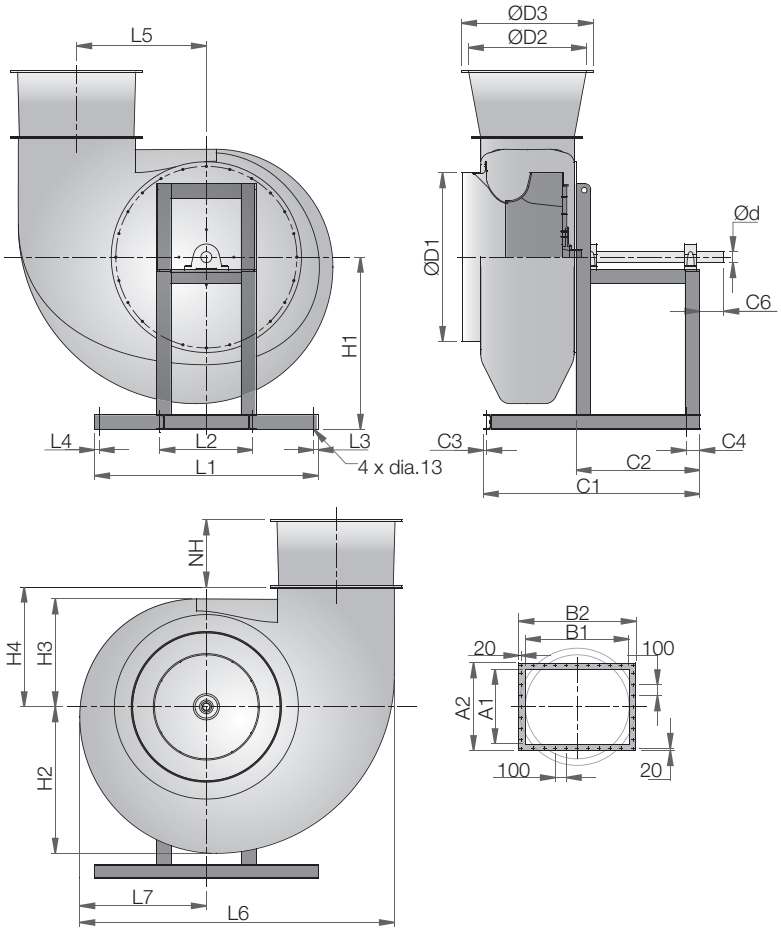

d [mm]	Key [mm]
45	14 x 9
60	18 x 11

The direction of rotation is as viewed from the drive side;
= Barefan weight approximatly

Model size	A1 [mm]	A2 [mm]	B1 [mm]	B2 [mm]	C1 [mm]	C2 [mm]	C3 [mm]	C4 [mm]	C6 [mm]	D1 [mm]	D2 [mm]	D3 [mm]	d [mm]	H1a [mm]	H1b [mm]
500-630-631	490	590	400	500	1013	604	19	75	100	632	510	590	45	783	633
500-710-722	490	590	400	500	1013	604	19	75	100	720	510	590	45	783	633
560-710-722	550	650	450	550	1058	604	19	75	125	720	570	670	45	870	709
560-800-824	550	650	450	550	1058	604	19	75	125	805	570	670	45	870	709
630-800-824	620	720	505	605	1184	677	19	75	125	805	640	740	60	939	775
630-900-912	620	720	505	605	1184	677	19	75	125	905	640	740	60	939	775
710-900-912	710	810	580	680	1332	761	19	75	125	905	712	812	60	1030	900
710-1000-1000	710	810	580	680	1332	761	19	75	125	1000	712	812	60	1030	900

Model size	H1c [mm]	H1d [mm]	H1e [mm]	H2 [mm]	H3 [mm]	H4 [mm]	L1 [mm]	L2 [mm]	L3 [mm]	L4 [mm]	L5 [mm]	L6 [mm]	L7 [mm]	NH [mm]	(kg)
500-630-631	TBA	911	786	634	465	518	970	482	25	25	445	1268	549	270	186
500-710-722	TBA	911	786	634	465	518	970	482	25	25	570	1360	549	270	188
560-710-722	TBA	1005	879	710	521	580	1090	429	25	25	630	1520	615	300	228
560-800-824	TBA	1005	879	710	521	580	1090	429	25	25	630	1520	615	300	228
630-800-824	TBA	1128	950	799	586	653	1222	507	25	25	705	1720	692	330	248
630-900-912	TBA	1128	950	799	586	653	1222	507	25	25	705	1720	692	330	248
710-900-912	TBA	1250	1110	900	660	736	1273	573	25	25	795	1930	780	370	280
710-1000-1000	TBA	1250	1110	900	660	736	1273	573	25	25	795	1930	780	370	280

We reserve the right to alter measurements without notice in case of technical improvements

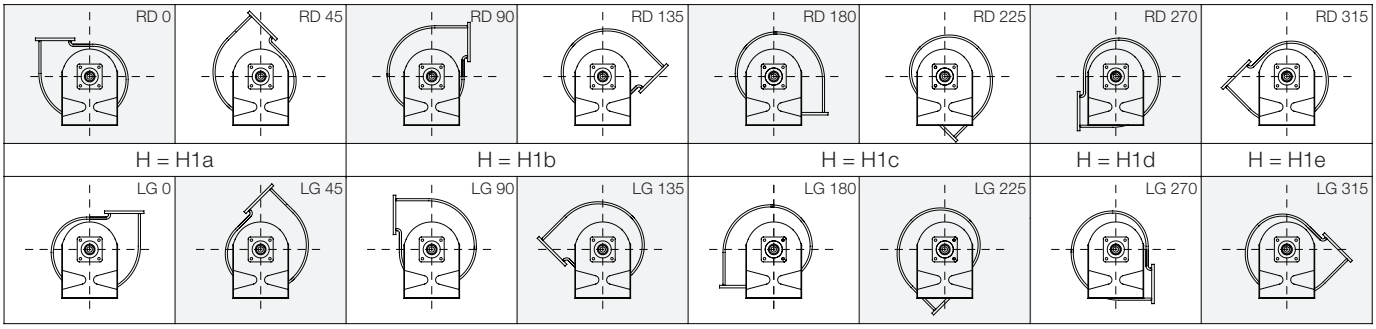

CHEM 800-1000-1000
·····to·····
CHEM 1250-1800-1800

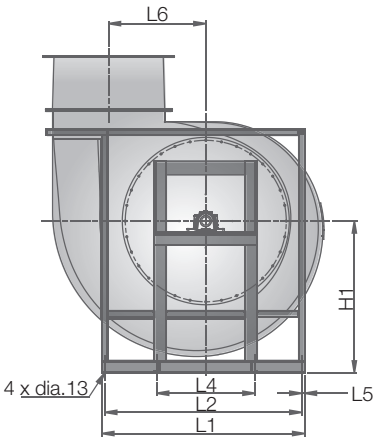

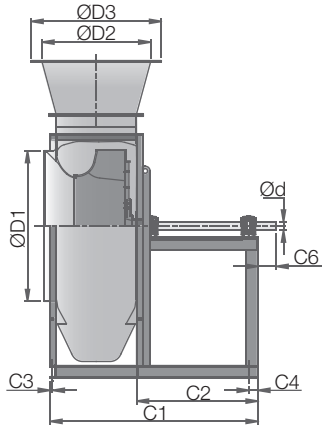

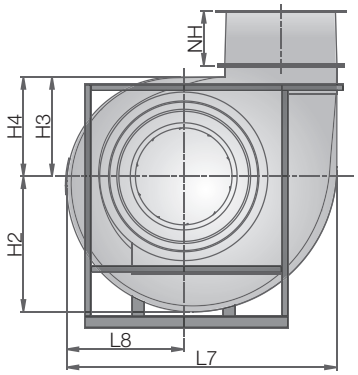

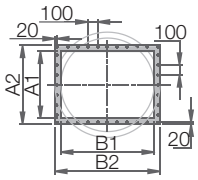

d [mm]	Key [mm]
70	20 x 12
80	22 x 14

The direction of rotation is as viewed from the drive side;

= Barefan weight approximatly

Model size	A1 [mm]	A2 [mm]	B1 [mm]	B2 [mm]	C1 [mm]	C2 [mm]	C3 [mm]	C4 [mm]	C6 [mm]	D1 [mm]	D2 [mm]	D3 [mm]	d [mm]	H1a [mm]	H1b [mm]
800-1000-1000	830	940	590	700	1417	761	25	75	160	800	800	900	70	1130	1000
800-1120-1120	830	940	590	700	1417	761	25	75	160	800	800	900	70	1130	1000
900-1120-1120	935	1065	666	796	1756	1000	25	75	160	900	894	994	70	1278	1105
900-1250-1250	935	1065	666	796	1756	1000	25	75	160	900	894	994	70	1278	1105
1000-1250-1250	1034	1176	744	886	1833	1000	25	75	160	1000	1000	1100	70	1375	1200
1000-1400-1400	1034	1176	744	886	1833	1000	25	75	160	1000	1000	1100	70	1375	1200
1120-1400-1400	1160	1302	820	962	1896	1000	25	75	200	1120	1125	1245	80	1550	1350
1120-1600-1600	1160	1302	820	962	1896	1000	25	75	200	1120	1125	1245	80	1550	1350
1250-1600-1600	1291	1439	917	1065	1991	1000	25	75	200	1250	1265	1385	80	1700	1500
1250-1800-1800	1291	1439	917	1065	1991	1000	25	75	200	1250	1265	1385	80	1700	1500

Model size	H1c [mm]	H1d [mm]	H1e [mm]	H2 [mm]	H3 [mm]	H4 [mm]	L1 [mm]	L2 [mm]	L4 [mm]	L5 [mm]	L6 [mm]	L7 [mm]	L8 [mm]	NH [mm]	(kg)
800-1000-1000	TBA	1280	1230	1014	744	829	1450	1400	721	25	729	2029	879	410	420
800-1120-1120	TBA	1280	1230	1014	744	829	1450	1400	721	25	729	2029	879	410	420
900-1120-1120	TBA	1428	1362	1141	837	933	1632	1582	818	25	821	2282	989	450	500
900-1250-1250	TBA	1428	1362	1141	837	933	1632	1582	818	25	821	2282	989	450	500
1000-1250-1250	TBA	1560	1500	1268	930	1037	1813	1763	914	25	912	2536	1099	490	625
1000-1400-1400	TBA	1560	1500	1268	930	1037	1813	1763	914	25	912	2536	1099	490	625
1120-1400-1400	TBA	1760	1600	1420	1041	1161	2030	1980	1030	25	1021	2840	1231	550	722
1120-1600-1600	TBA	1760	1600	1420	1041	1161	2030	1980	1030	25	1021	2840	1231	550	722
1250-1600-1600	TBA	1935	1800	1585	1162	1296	2100	2050	1140	25	1140	3170	1373	600	859
1250-1800-1800	TBA	1935	1800	1585	1162	1296	2100	2050	1140	25	1140	3170	1373	600	859

We reserve the right to alter measurements without notice in case of technical improvements

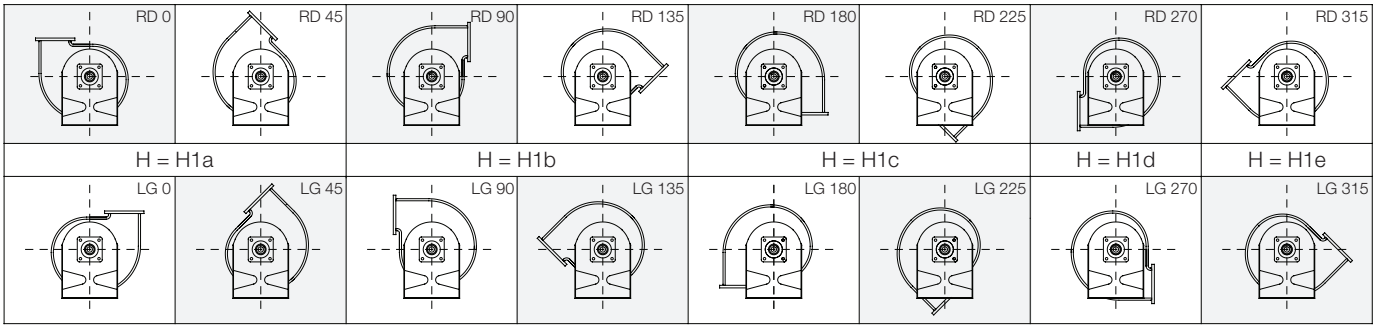

CHEM 200-315-317 to 400-500-504 DD

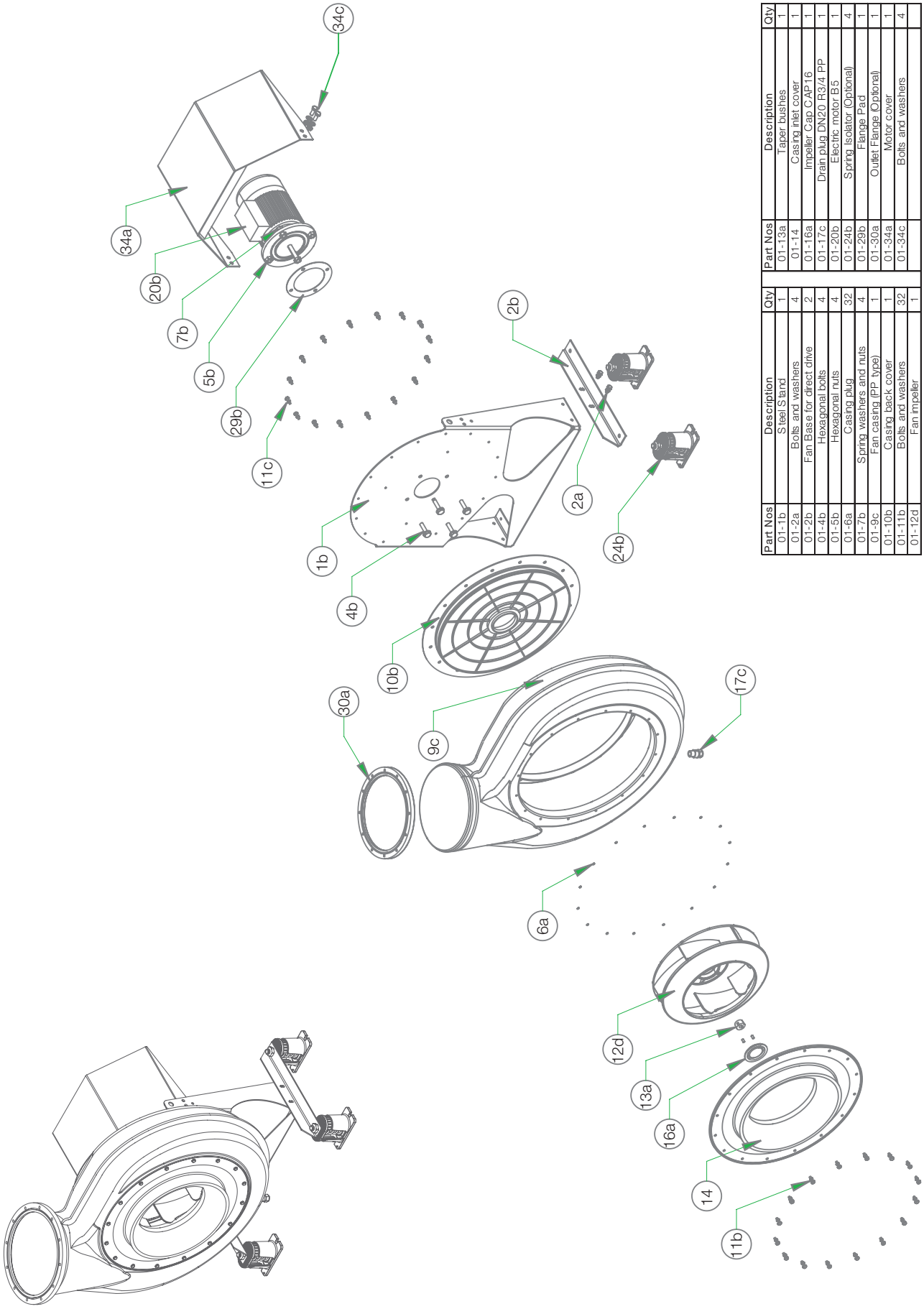

Part Nos	Description	Qty
01-1b	Steel Stand	1
01-2a	Bolts and washers	4
01-2b	Fan Base for direct drive	2
01-4b	Hexagonal bolts	4
01-5b	Hexagonal nuts	4
01-6a	Casing plug	32
01-7b	Spring washers and nuts	4
01-9c	Fan casing (PP type)	1
01-10b	Casing back cover	1
01-11b	Bolts and washers	32
01-12d	Fan impeller	1

Part Nos	Description	Qty
01-13a	Taper bushes	1
01-14	Casing inlet cover	1
01-16a	Impeller Cap CAP16	1
01-17c	Drain plug DN20 R3/4 PP	1
01-20b	Electric motor B5	1
01-24b	Spring Isolator (Optional)	4
01-29b	Flange Pad	1
01-30a	Outlet Flange (Optional)	1
01-34a	Motor cover	1
01-34c	Bolts and washers	4

CHEM 200-315-317 to 400-500-504 BD

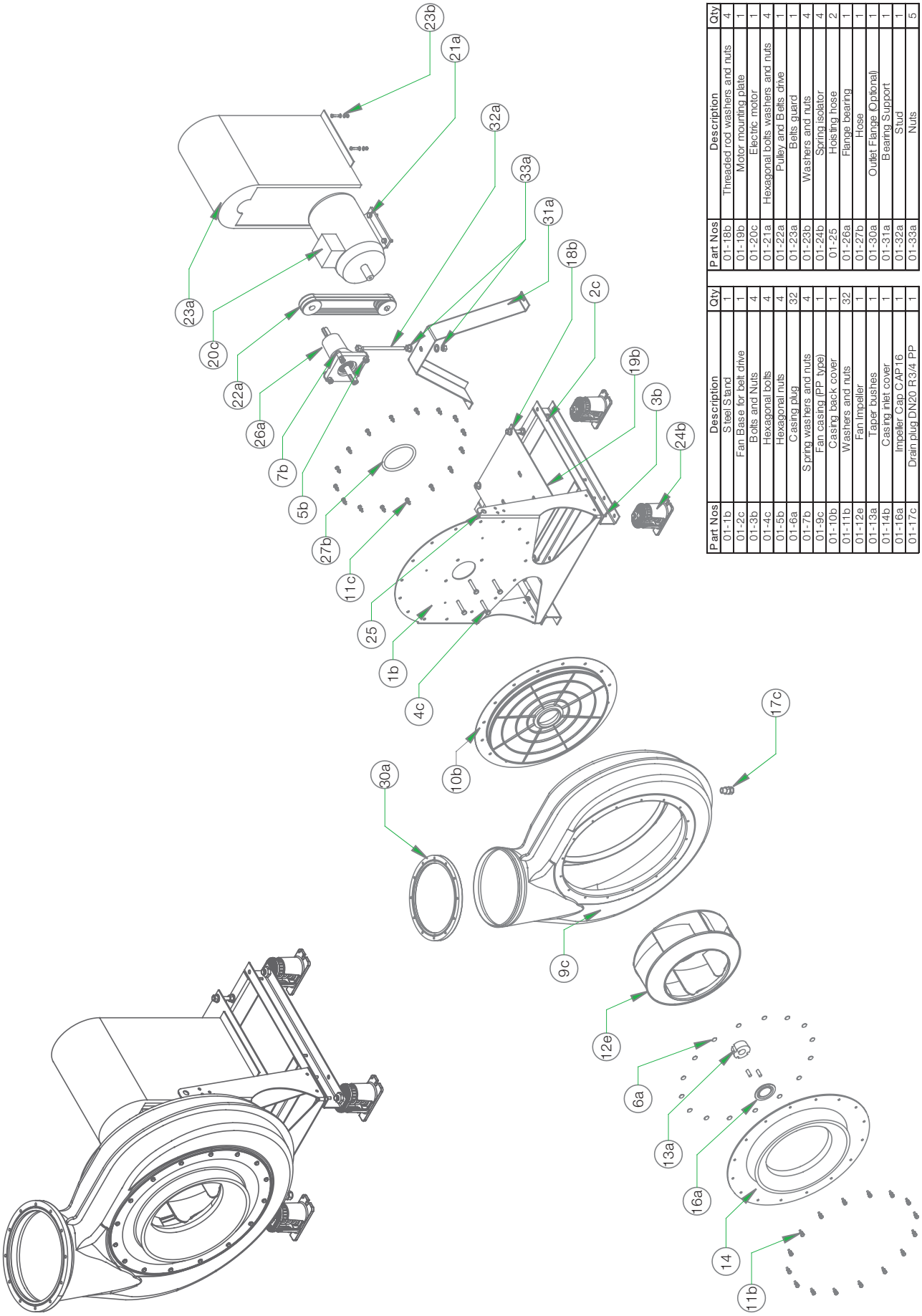

Part Nos	Description	Qty
01-1b	Steel Stand	1
01-2c	Fan Base for belt drive	1
01-3b	Bolts and Nuts	4
01-4c	Hexagonal bolts	4
01-5b	Hexagonal nuts	4
01-6a	Casing plug	32
01-7b	Spring washers and nuts	4
01-9c	Fan casing (PP type)	1
01-10b	Casing back cover	1
01-11b	Washers and nuts	32
01-12e	Fan Impeller	1
01-13a	Taper bushes	1
01-14b	Casing inlet cover	1
01-16a	Impeller Cap CAP16	1
01-17c	Drain plug DN20 R3/4 PP	1

Part Nos	Description	Qty
01-18b	Threaded rod washers and nuts	4
01-19b	Motor mounting plate	1
01-20c	Electric motor	1
01-21a	Hexagonal bolts washers and nuts	4
01-22a	Pulley and Belts drive	1
01-23a	Belts guard	1
01-23b	Washers and nuts	4
01-24b	Spring isolator	4
01-25	Hoisting hose	2
01-26a	Flange bearing	1
01-27b	Hose	1
01-30a	Outlet Flange (Optional)	1
01-31a	Bearing Support	1
01-32a	Stud	1
01-33a	Nuts	5

CHEM 400-560-570 to 450-630-631 DD

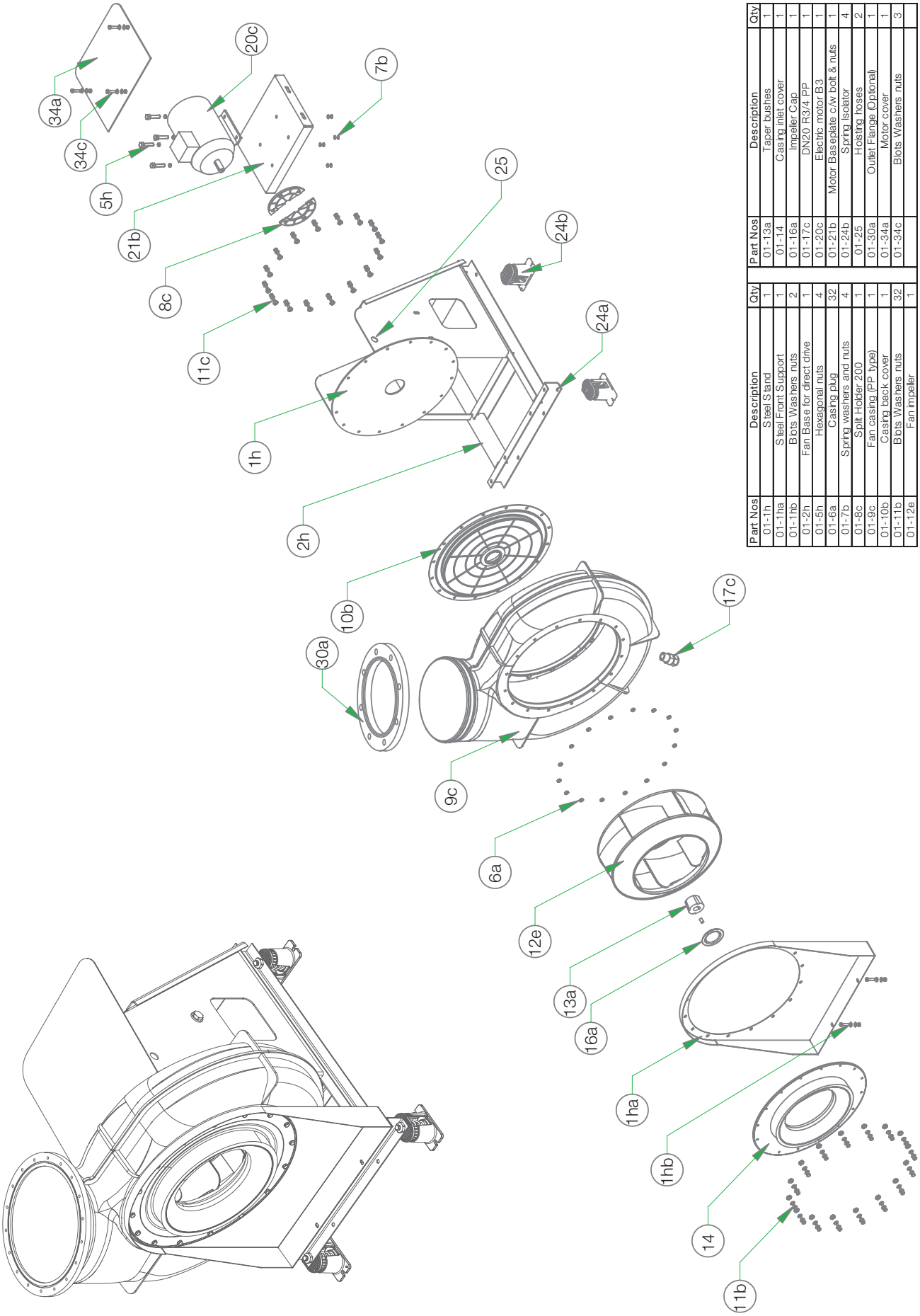

Part Nos	Description	Qty
01-1h	Steel Stand	1
01-1ha	Steel Front Support	1
01-1hb	Bolts Washers nuts	2
01-2h	Fan Base for direct drive	1
01-5h	Hexagonal nuts	4
01-6a	Casing plug	32
01-7b	Spring washers and nuts	4
01-8c	Split Holder 200	1
01-9c	Fan casing (PP type)	1
01-10b	Casing back cover	1
01-11b	Bolts Washers nuts	32
01-12e	Fan impeller	1

Part Nos	Description	Qty
01-13a	Taper bushes	1
01-14	Casing inlet cover	1
01-16a	Impeller Cap	1
01-17c	DN20 R3/4 PP	1
01-20c	Electric motor B3	1
01-21b	Motor Baseplate c/w bolt & nuts	1
01-24b	Spring Isolator	4
01-25	Hoisting noses	2
01-30a	Outlet Flange (Optional)	1
01-34a	Motor cover	1
01-34c	Bolts Washers nuts	3

CHEM 400-560-570 to 450-630-631 BD

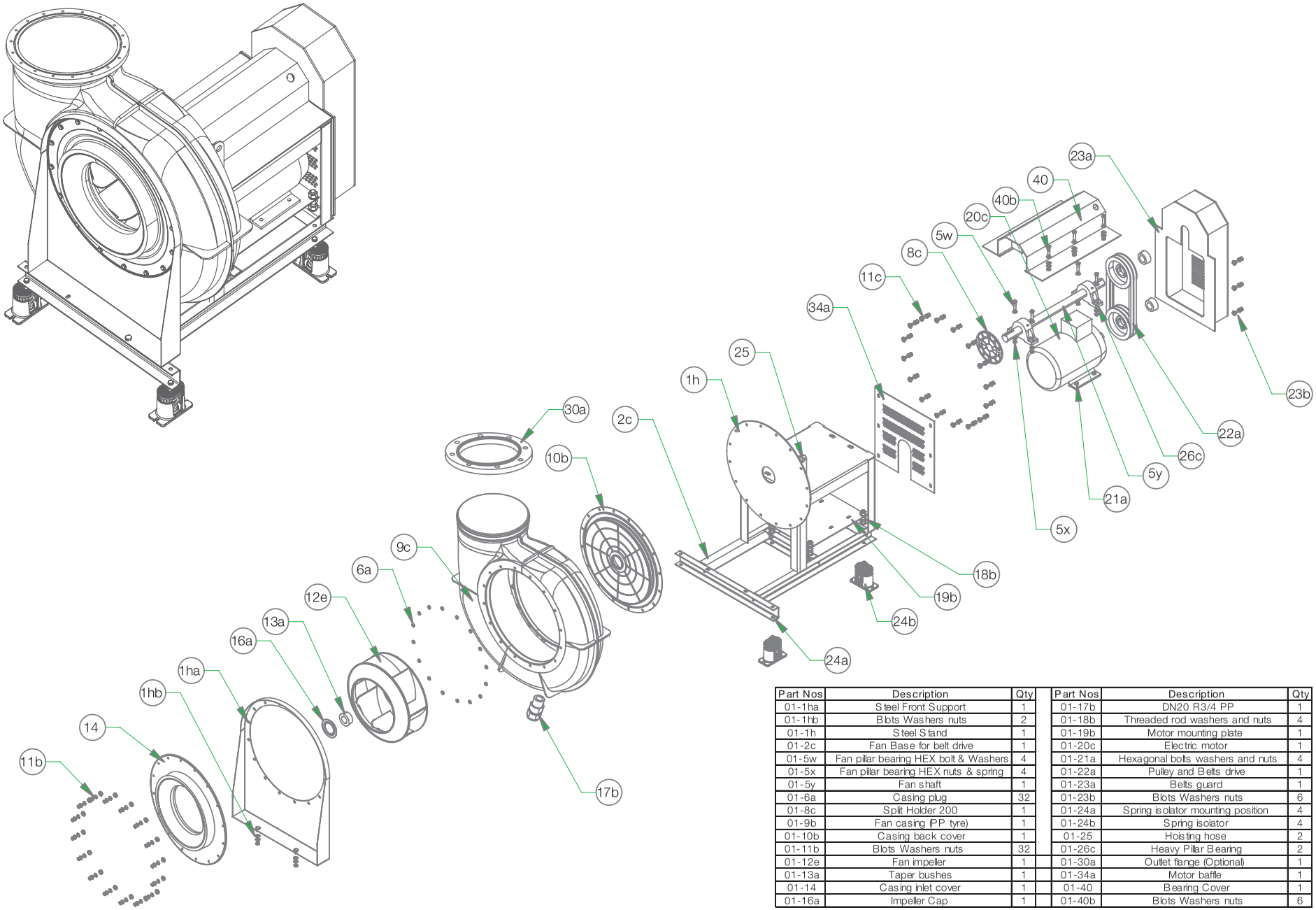

Part Nos	Description	Qty	Part Nos	Description	Qty
01-1ha	Steel Front Support	1	01-17b	DN20 R3/4 PP	1
01-1hb	Blots Washers nuts	2	01-18b	Threaded rod washers and nuts	4
01-1h	Steel Stand	1	01-19b	Motor mounting plate	1
01-2c	Fan Base for belt drive	1	01-20c	Electric motor	1
01-5w	Fan pillar bearing HEX bolt & Washers	4	01-21a	Hexagonal bolts washers and nuts	4
01-5x	Fan pillar bearing HEX nuts & spring	4	01-22a	Pulley and Belts drive	1
01-5y	Fan shaft	1	01-23a	Belts guard	1
01-6a	Casing plug	32	01-23b	Blots Washers nuts	6
01-8c	Split Holder 200	1	01-24a	Spring isolator mounting position	4
01-9b	Fan casing (PP tyre)	1	01-24b	Spring isolator	4
01-10b	Casing back cover	1	01-25	Hoisting hose	2
01-11b	Blots Washers nuts	32	01-26c	Heavy Pillar Bearing	2
01-12e	Fan impeller	1	01-30a	Outlet flange (Optional)	1
01-13a	Taper bushes	1	01-34a	Motor baffle	1
01-14	Casing inlet cover	1	01-40	Bearing Cover	1
01-16a	Impeller Cap	1	01-40b	Blots Washers nuts	6

CHEM 500-630-631 to 710-1000-1000 DD

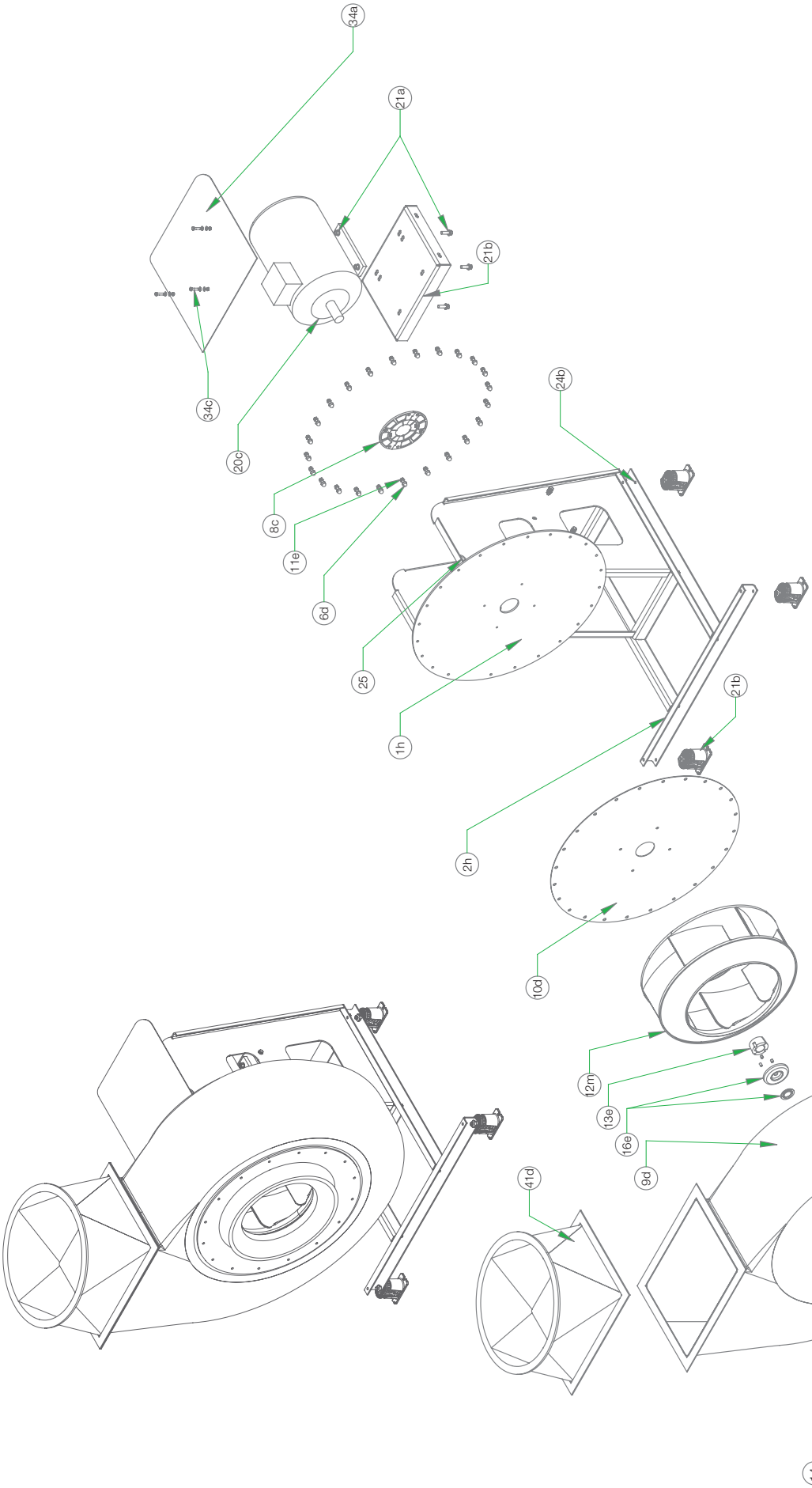

Part Nos	Description	Qty	Part Nos	Description	Qty
01-1h	Steel Stand	1	01-17g	Drain plug DN25 R1 PVC	1
01-2h	Fan Base for direct drive	1	01-20c	Electric motor B3	1
01-6d	Casing plug heat weld PVC	24	01-21a	Hex bolts, Washers & Nuts	4
01-8c	Split Holder	1	01-21b	Motor Baseplate	1
01-9d	Fan casing (GRP / FRP type)	1	01-24a	Spring Isolator mounting position	4
01-10d	Casing back cover	1	01-24b	Spring Isolator (Optional)	4
01-11e	Bolts, washer and nuts	24	01-25	Hoisting holes	2
01-12m	Fan impeller	1	01-34a	Motor cover	1
01-13e	Taper bushes	1	01-34c	Boltds and washers	3
01-14	Casing inlet cover	1	01-41d	Outlet Transition (Optional)	1
01-16e	Impeller Cap HC150/CAP12	1			

CHEM 500-630-631 to 710-1000-1000 BD

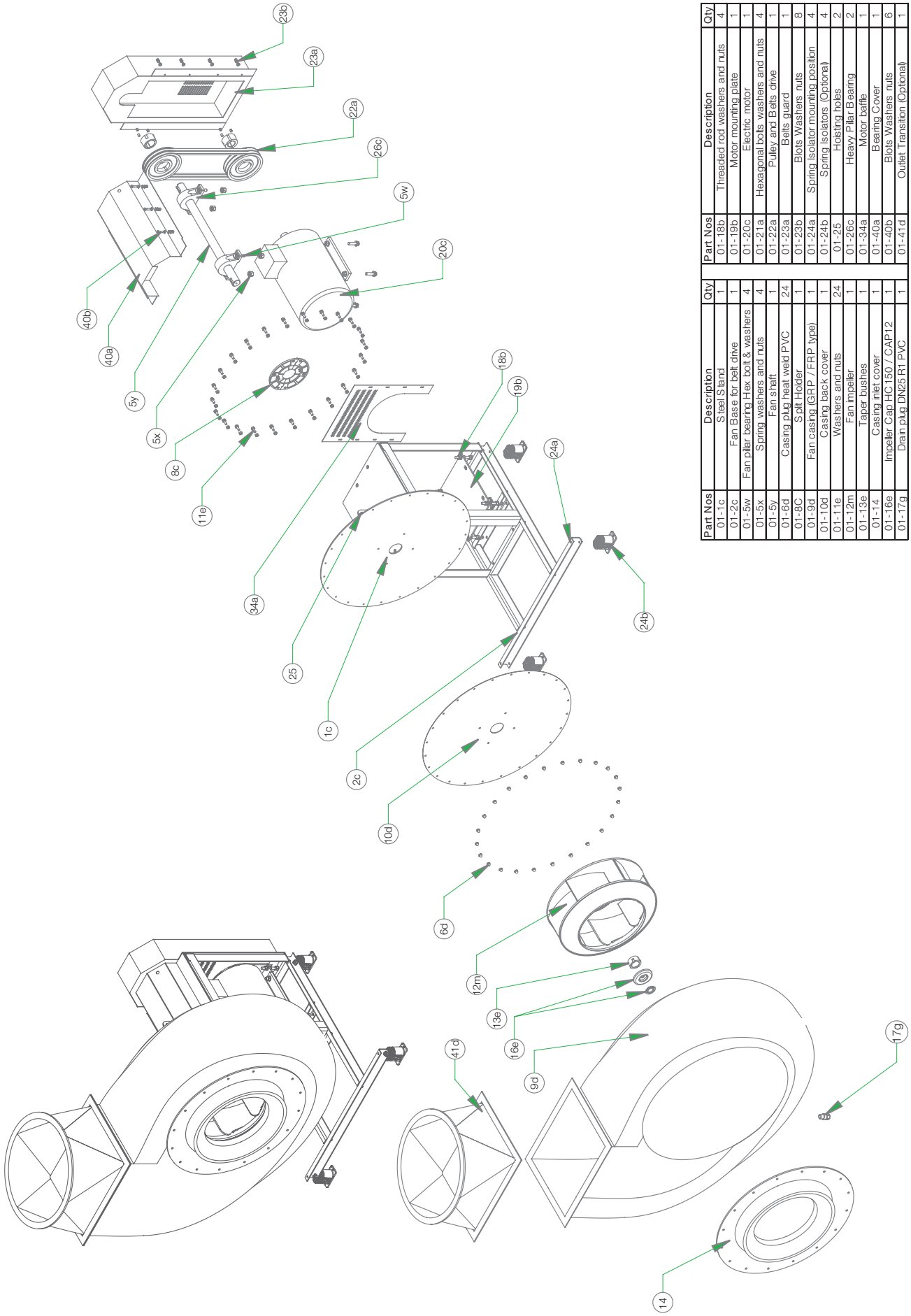

Part Nos	Description	Qty
01-1c	Steel Stand	1
01-2c	Fan Base for belt drive	1
01-5w	Fan pillar bearing Hex bolt & washers	4
01-5x	Spring washers and nuts	4
01-5y	Fan shaft	1
01-6d	Casing plug heat weld PVC	24
01-8C	Split Holder	1
01-9d	Fan casing (GRP / FRP type)	1
01-10d	Casing back cover	1
01-11e	Washers and nuts	24
01-12m	Fan impeller	1
01-13e	Taper bushes	1
01-14	Casing inlet cover	1
01-16e	Impeller Cap HC150 / CAP12	1
01-17g	Drain plug DN25 R1 PVC	1

Part Nos	Description	Qty
01-18b	Threaded rod washers and nuts	4
01-19b	Motor mounting plate	1
01-20c	Electric motor	1
01-21a	Hexagonal bolts washers and nuts	4
01-22a	Pulley and Belts drive	1
01-23a	Belts guard	1
01-23b	Blots Washers nuts	8
01-24a	Spring Isolator mounting position	4
01-24b	Spring Isolators (Optional)	4
01-25	Hoisting holes	2
01-26c	Heavy Pillar Bearing	2
01-34a	Motor baffle	1
01-40a	Bearing Cover	1
01-40b	Blots Washers nuts	6
01-41d	Outlet Transition (Optional)	1

CHEM 800-1000-1000 to 1250-1800-1800 DD

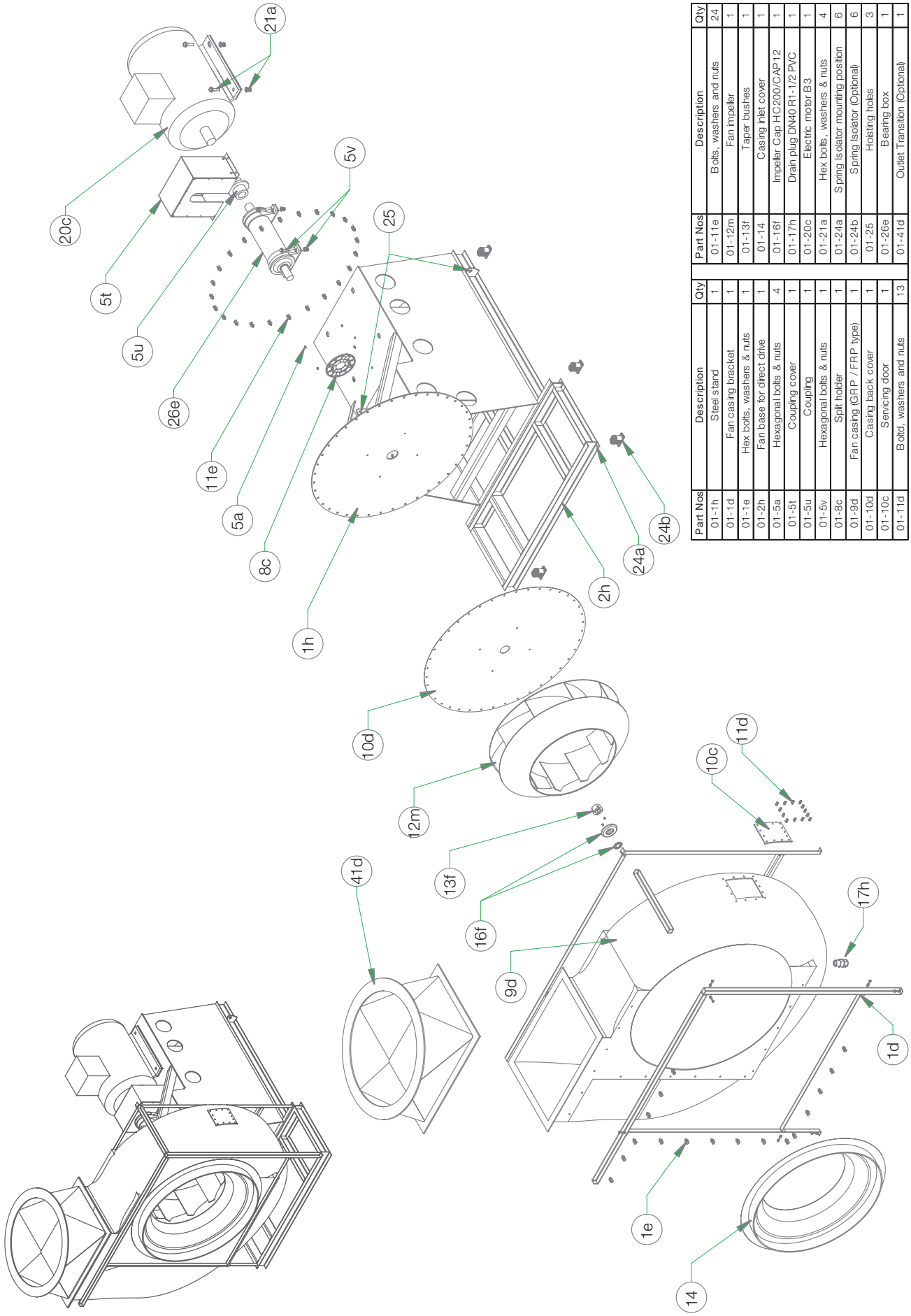

Part Nos	Description	Qty
01-1h	Steel stand	1
01-1d	Fan casing bracket	1
01-1e	Hex bolts, washers & nuts	1
01-2h	Fan base for direct drive	1
01-5a	Hexagonal bolts & nuts	4
01-5t	Coupling cover	1
01-5u	Coupling	1
01-5v	Hexagonal bolts & nuts	1
01-8c	Split holder	1
01-9d	Fan casing (GRP / FRP type)	1
01-10d	Casing back cover	1
01-10c	Servicing door	1
01-11d	Boltd, washers and nuts	13

Part Nos	Description	Qty
01-11e	Bolts, washers and nuts	24
01-12m	Fan impeller	1
01-13f	Taper bushes	1
01-14	Casing inlet cover	1
01-16f	Impeller Cap HC200/CAP12	1
01-17h	Drain plug DN40 R1-1/2 PVC	1
01-20c	Electric motor B3	1
01-21a	Hex bolts, washers & nuts	4
01-24a	Spring Isolator mounting position	6
01-24b	Spring Isolator (Optional)	6
01-25	Hoisting holes	3
01-26e	Bearing box	1
01-41d	Outlet Transition (Optional)	1

CHEM 800-1000-1000 to 1250-1800-1800 BD

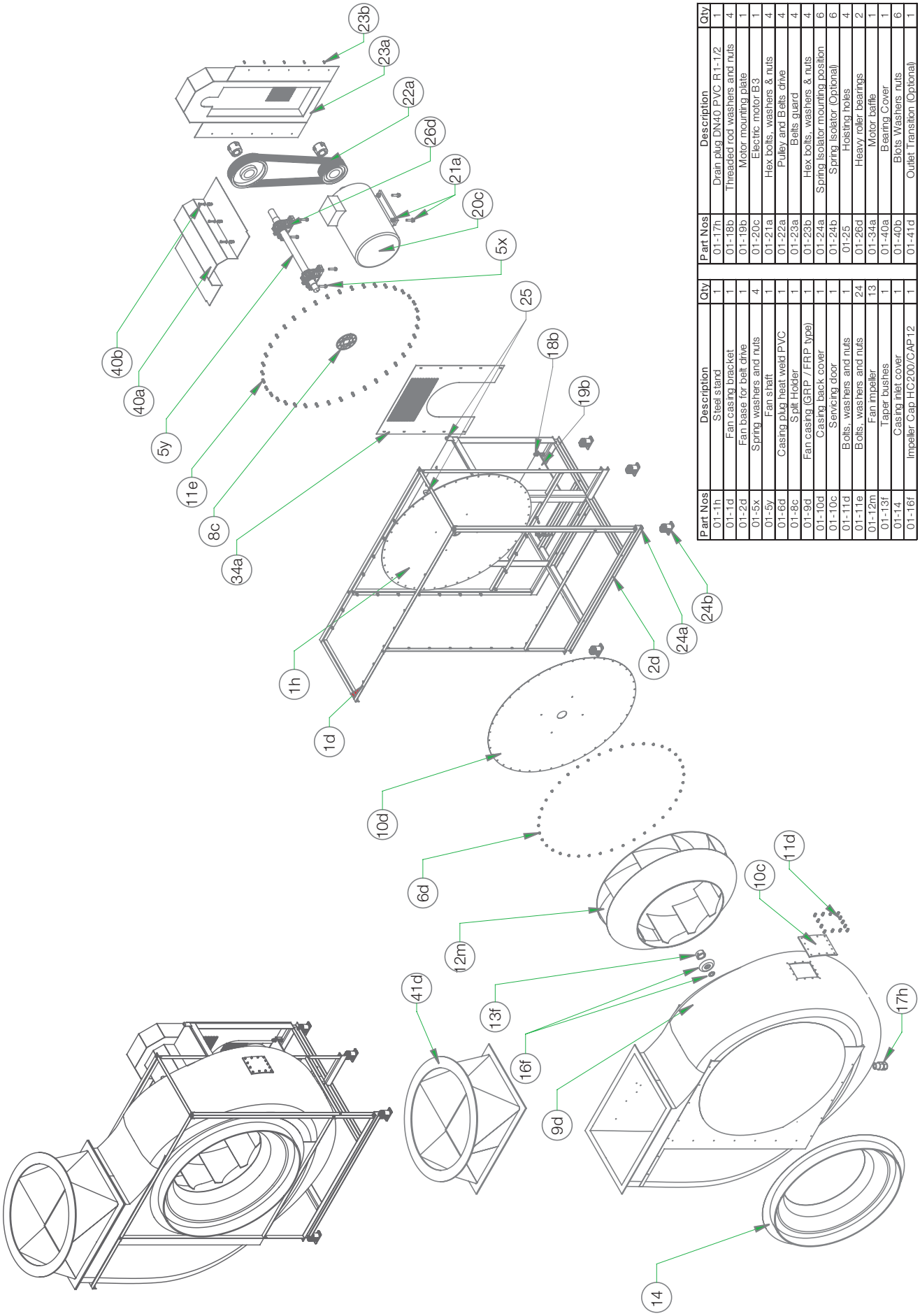

Part Nos	Description	Qty
01-1h	Steel stand	1
01-1d	Fan casing bracket	1
01-2d	Fan base for belt drive	1
01-5x	Spring washers and nuts	4
01-5y	Fan shaft	1
01-6d	Casing plug heat weld PVC	1
01-8c	Split Holder	1
01-9d	Fan casing (GRP / FRP type)	1
01-10d	Casing back cover	1
01-10c	Servicing door	1
01-11d	Bolts, washers and nuts	1
01-11e	Bolts, washers and nuts	24
01-12m	Fan impeller	13
01-13f	Taper bushes	1
01-14	Casing inlet cover	1
01-16f	Impeller Cap HC200/CAP12	1

Part Nos	Description	Qty
01-17h	Drain plug DN40 PVC R1-1/2	1
01-18b	Threaded rod washers and nuts	4
01-19b	Motor mounting plate	1
01-20c	Electric motor B3	1
01-21a	Hex bolts, washers & nuts	4
01-22a	Pulley and Belts drive	4
01-23a	Belts guard	4
01-23b	Hex bolts, washers & nuts	4
01-24a	Spring Isolator mounting position	6
01-24b	Spring Isolator (Optional)	6
01-25	Hoisting holes	4
01-26d	Heavy roller bearings	2
01-34a	Motor baffle	1
01-40a	Bearing Cover	1
01-40b	Blots Washers nuts	6
01-41d	Outlet Transition (Optional)	1

Description	Specified	Offered
Wolter Chemco Chemical Resistant Centrifugal Fan Model: CHEM 200-315-317 to 400-500-504 DD (Direct Driven) Fan Location	Chemical Resistant Centrifugal Fan	
Volume m^3/h External static pressure Pa Fan speed min^{-1} Brake-Input kW Motor-Output kW Full load Current A A-weighted Sound power level dB(A) Fan Weight Kg Standard Colour	Black	
Type of Casing Precision plastic injection moulded, are suitable for dual rotation at any position. Injection moulded back plate & inlet cover can be removed for changing of rotation and maintenance. Outlet flange comes with chemical resistant seal to prevent air leakage. Casing are blended with ultra violet protection. No metal parts are situated in the airflow to eliminate the risk of corrosion. Casings with drain outlets at lowest point. Can be rotated to suit different discharge positions. c/w back draft rubber seal between casing and drive shaft.	Polypropylene (PP) as standard; PE, PVC, PVDF, GRP, FRP, SS as optional	
Type of Impeller Impellers are of Single Inlet Single Width (SISW) type. Precision plastic injection moulded with cast in hub. The hubs are designed for use with taper bushes to guarantee high reliability at high peripheral speeds.	PP as standard; PE, PVC, PVDF, GRP, FRP, SS as optional Backward Curve	
Performance tested Fan rated in accordance with: Impeller is statically and dynamically balanced in two planes.	ISO 5801 / AMCA 210 G2.5 of VDI 2060	
Fan Base and Support Heavy gauge mild steel with maximum protection in the most adverse condition	Hot-dipped galvanised	
Type of Drive	Direct Driven	
Motor Drive Shaft Solid type ground and polished to give tight, accurate bearing fit.	EN 10084-C45 / ISO 683-3 or AISI C-1045	
Motor Bearing Fitted with two standard anti-friction bearings with acid proof seal. L10 life	Grooved balls	
Electric motor Standard Flameproof Tropicalised Single Phase: Three Phase:	 Yes / No Yes / No Yes / No 220~240 volts 50/60 Hz 380~415 volts 50/60 Hz	
Special Accessories Required Inspection View Port Anti-vibration spring mounting Inlet sleeve with clamping bands Splinter protection cover	 Yes / No Yes / No Yes / No Yes / No	
Optional Requirement Temperature (ºC) Casing material Impeller material Fan Base and Support Flame Retardant	 80 PA / PC / PVC / PVDF PA / PC / PVC / PVDF SS304 / SS316 Yes/No	
Electrostatic Discharge Anti-static Static dissipative Conductive	 Yes/No Yes/No Yes/No	

Maximum operating sound power level (dB $re10^{-12}W$):

Octave band mid frequency (Hz)	63	125	250	500	1K	2K	4K	8K
Specified								
Offered								

Description	Specified	Offered
CHEMCO Chemical Resistant Centrifugal Fan Model: CHEM 200-315-317 to 400-500-504 BD (Belt Driven) Fan Location	Chemical Resistant Centrifugal Fan	
Volume m^3/h External static pressure Pa Fan speed min^{-1} Brake-Input kW Motor-Output kW Full load Current A A-weighted Sound power level dB(A) Fan Weight Kg Standard Colour	Black	
Type of Casing Precision plastic injection moulded, are suitable for dual rotation at any position. Injection moulded back plate & inlet cover can be removed for changing of rotation and maintenance. Outlet flange comes with chemical resistant seal to prevent air leakage. Casing are blended with ultra violet protection. No metal parts are situated in the airflow to eliminate the risk of corrosion. Casings with drain outlets at lowest point. Can be rotated to suit different discharge positions. c/w back draft rubber seal between casing and drive shaft.	Polypropylene (PP) as standard; PE, PVC, PVDF, GRP, FRP, SS as optional	
Type of Impeller Impellers are of Single Inlet Single Width (SISW) type. Precision plastic injection moulded with cast in hub. The hubs are designed for use with taper bushes to guarantee high reliability at high peripheral speeds.	PP as standard; PE, PVC, PVDF, GRP, FRP, SS as optional Backward Curve	
Performance tested Fan rated in accordance with: Impeller is statically and dynamically balanced in two planes.	ISO 5801 / AMCA 210 G2.5 of VDI 2060	
Fan Base and Support Heavy gauge mild steel with maximum protection in the most adverse condition	Hot-dipped galvanised	
Type of Drive	Belt Driven	
Drive Shaft Solid type ground and polished to give tight, accurate bearing and hubs fit.	EN 10084-C45 / ISO 683-3 or AISI C-1045	
Bearing Belt driven flange mounted bearing housings type. Fitted with two standard anti friction bearings with acid proof seal. L10 life	Aluminium cast type Grooved balls	
Fan Drive Fan and Motor Pulley drive come with taper bush type balanced to: Vee belts conform to:	ISO 4183:2026 ISO 4148:2004(E)	
Electric motor Standard Flameproof Tropicalised Single Phase: Three Phase:	 Yes/No Yes/No Yes/No 220~240 volts 50/60 Hz 380~415 volts 50/60 Hz	
Special Accessories Required Inspection View Port Anti-vibration spring mounting Motor Guard Motor slide rails Belt guard Inlet sleeve with clamping bands Splinter protection cover	 Yes / No Yes / No Yes / No Yes / No Yes / No Yes / No Ye s/ No	
Optional Requirement Temperature (ºC) Casing material Impeller material Fan Base and Support Flame Retardant	 80 PA / PC / PVC / PVDF PA / PC / PVC / PVDF SS304 / SS316 Yes/No	
Electrostatic Discharge Anti-static Static dissipative Conductive	 Yes / No Yes / No Yes / No	

Maximum operating sound power level (dB re10^{-12}W):

Octave band mid frequency (Hz)	63	125	250	500	1K	2K	4K	8K
Specified								
Offered								

Description	Specified	Offered
Wolter Chemco Chemical Resistant Centrifugal Fan Model: CHEM 400-560-570 to 450-630-631 DD (Direct Driven) Fan Location	Chemical Resistant Centrifugal Fan	
Volume m^3/h External static pressure Pa Fan speed min^{-1} Brake-Input kW Motor-Output kW Full load Current A A-weighted Sound power level dB(A) Fan Weight Kg Standard Colour	Black	
Type of Casing Precision plastic injection moulded, suitable for dual rotation at any position. Injection moulded back plate & inlet cover can be removed for changing of rotation and maintenance. Outlet flange comes with chemical resistant seal to prevent air leakage. Casing are blended with ultra violet protection. No metal parts are situated in the airflow to eliminate the risk of corrosion. Casings with drain outlets at lowest point. Can be rotated to suit different discharge positions. C/W back draft rubber seal between casing and drive shaft.	PP as standard; PE, PVC, PVDF, GRP, FRP, SS as optional	
Type of Impeller Impellers are of Single Inlet Single Width (SISW) type. Impeller with heavy-duty cast in hub. The hubs are designed for use with taper bushes to guarantee high reliability at high peripheral speeds.	impeller size 560 with PP as standard; impeller size 630 with GRP as standard; PE, PVC, PVDF, GRP, FRP, SS as optional; Backward Curve	
Performance tested Fan rated in accordance with: Impeller is statically and dynamically balanced in two planes.	ISO 5801 / AMCA 210 G2.5 of VDI 2060	
Fan Base and Support Heavy gauge mild steel with maximum protection in the most adverse condition	Hot-dipped galvanised	
Type of Drive	Direct Driven	
Motor Drive Shaft Solid type ground and polished to give tight, accurate bearing fit.	EN 10084-C45 / ISO 683-3 or AISI C-1045	
Motor Bearing Fitted with two standard anti-friction bearings with acid proof seal. L10 life	Grooved balls	
Electric motor Standard Flameproof Tropicalised Three Phase:	 Yes/No Yes/No Yes/No 380~415 volts 50/60 Hz	
Special Accessories Required Inspection View Port Anti-vibration spring mounting Inlet sleeve with clamping bands Splinter protection cover	 Yes/No Yes/No Yes/No Yes/No	
Optional Requirement Temperature (ºC) Casing material Impeller material Fan Base and Support Flame Retardant Ultra Violet protection	 80 PA / PC / PVC / PVDF PA / PC / PVC / PVDF SS304 / SS316 Yes/No Yes/No	
Electrostatic Discharge Anti-static Static dissipative Conductive	 Yes/No Yes/No Yes/No	

Maximum operating sound power level (dB re10^{-12}W):

Octave band mid frequency (Hz)	63	125	250	500	1K	2K	4K	8K
Specified								
Offered								

Description	Specified	Offered
Wolter Chemco Chemical Resistant Centrifugal Fan Model CHEM 400-560-570 to 450-630-631 BD (Belt Driven) Fan Location	Chemical Resistant Centrifugal Fan	
Volume m^3/h External static pressure Pa Fan speed min^{-1} Brake-Input kW Motor-Output kW Full load Current A A-weighted Sound power level dB(A) Fan Weight Kg Standard Colour	Black	
Type of Casing Precision plastic injection moulded, suitable for dual rotation at any position. Injection moulded back plate & inlet cover can be removed for changing of rotation and maintenance. Outlet flange comes with chemical resistant seal to prevent air leakage. Casing are blended with ultra violet protection. No metal parts are situated in the airflow to eliminate the risk of corrosion. Casings with drain outlets at lowest point. Can be rotated to suit different discharge positions. C/W back draft rubber seal between casing and drive shaft.	PP as standard; PE, PVC, PVDF, GRP, FRP, SS as optional	
Type of Impeller Impellers are of Single Inlet Single Width (SISW) type. Impeller with heavy-duty cast in hub. The hubs are designed for use with taper bushes to guarantee high reliability at high peripheral speeds.	impeller size 560 with PP as standard; impeller size 630 with GRP as standard; PE, PVC, PVDF, GRP, FRP, SS as optional; Backward Curve	
Performance tested Fan rated in accordance with: Impeller is statically and dynamically balanced in two planes.	ISO 5801 / AMCA 210 G2.5 of VDI 2060	
Fan Base and Support Heavy gauge mild steel with maximum protection in the most adverse condition	Hot-dipped galvanised	
Type of Drive	Belt Driven	
Drive Shaft Solid type ground and polished to give tight, accurate bearing and hubs fit.	EN 10084-C45 / ISO 683-3 or AISI C-1045	
Bearing Belt driven flange mounted bearing housings type. Fitted with two standard anti friction bearings with acid proof seal. L10 life	Aluminium cast type Grooved balls	
Fan Drive Fan and Motor Pulley drive come with taper bush type balanced to: Vee belts conform to:	ISO 4183:2026 ISO 4148:2004(E)	
Electric motor Standard Flameproof Tropicalised Three Phase:	 Yes/No Yes/No Yes/No 380~415 volts 50/60 Hz	
Special Accessories Required Inspection View Port Anti-vibration spring mounting Motor Guard Motor slide rails Belt guard Inlet sleeve with clamping bands Splinter protection cover Manual / Semi / Automatic greasing system	 Yes/No Yes/No Yes/No Yes/No Yes/No Yes/No Yes/No Yes/No	
Optional Requirement Temperature (ºC) Casing material Impeller material Fan Base and Support Flame Retardant Ultra Violet protection	 80 PA / PC / PVC / PVDF PA / PC / PVC / PVDF SS304 / SS316 Yes/No Yes/No	
Electrostatic Discharge Anti-static Static dissipative Conductive	 Yes/No Yes/No Yes/No	

Maximum operating sound power level (dB re10^{-12}W):

Octave band mid frequency (Hz)	63	125	250	500	1K	2K	4K	8K
Specified								
Offered								

Description	Specified	Offered
Wolter Chemco Chemical Resistant Centrifugal Fan Model: CHEM 500-630-631 to 710-1000-1000 DD (Direct Driven) Fan Location	Chemical Resistant Centrifugal Fan	
Volume m^3/h External static pressure Pa Fan speed min^{-1} Brake-Input kW Motor-Output kW Full load Current A A-weighted Sound power level dB(A) Fan Weight Kg Standard Colour	PANTONE 430	
Type of Casing Fibre Glass-Reinforced Plastic (GRP/FRP), Vinyl ester grade. Come with PP back plate can be removed for changing of rotation and maintenance. Rectangular outlet flange for easy duct connection. Max. Temp. 100ºC. No metal parts are situated in the airflow to eliminate the risk of corrosion. Casings with drain outlets at lowest point. Casing can be rotated to suit different discharge positions. C/W back draft rubber seal between casing and drive shaft.	GRP / FRP as standard; PE, PVC, PVDF, SS as optional	
Type of Impeller Impellers are of Single Inlet Single Width (SISW) type. Impeller with heavy-duty cast in hub. The hubs are designed for use with taper bushes to guarantee high reliability at high peripheral speeds.	GRP / FRP as standard; PE, PVC, PVDF, SS as optional; Backward Curve	
Performance tested Fan rated in accordance with: Impeller is statically and dynamically balanced in two planes.	ISO 5801 / AMCA 210 G2.5 of VDI 2060	
Fan Base and Support Heavy gauge mild steel with maximum protection in the most adverse condition	Hot-dipped galvanised	
Type of Drive	Direct Driven	
Motor Drive Shaft Solid type ground and polished to give tight, accurate bearing fit.	EN 10084-C45 / ISO 683-3 or AISI C-1045	
Motor Bearing Fitted with two standard anti-friction bearings with acid proof seal. L10 life	Grooved balls	
Electric motor Standard Flameproof Tropicalised Three Phase:	 Yes / No Yes / No Yes / No 380~415 volts 50/60 Hz	
Special Accessories Required Inspection View Port Anti-vibration spring mounting Inlet sleeve with clamping bands Splinter protection cover	 Yes / No Yes / No Yes / No Yes / No	
Optional Requirement Temperature (ºC) Casing material Impeller material Fan Base and Support Flame Retardant Ultra Violet protection	 80 PA / PC / PVC / PVDF PA / PC / PVC / PVDF SS304 / SS316 Yes / No Yes / No	
Electrostatic Discharge Anti-static Static dissipative Conductive	 Yes / No Yes / No Yes / No	

Maximum operating sound power level (dB re10^{-12}W):

Octave band mid frequency (Hz)	63	125	250	500	1K	2K	4K	8K
Specified								
Offered								

Description	Specified	Offered
Wolter Chemco Chemical Resistant Centrifugal Fan Model CHEM 500-630-631 to 710-1000-1000 BD (Belt Driven) Fan Location	Chemical Resistant Centrifugal Fan	
Volume m^3/h External static pressure Pa Fan speed min^{-1} Brake-Input kW Motor-Output kW Full load Current A A-weighted Sound power level dB(A) Fan Weight Kg Standard Colour	PANTONE 430	
Type of Casing Fibre Glass-Reinforced Plastic (GRP/FRP), Vinyl ester grade. Come with PP back plate can be removed for changing of rotation and maintenance. Rectangular outlet flange for easy duct connection. Max. Temp. 100ºC. No metal parts are situated in the airflow to eliminate the risk of corrosion. Casings with drain outlets at lowest point. Casing can be rotated to suit different discharge positions. C/W back draft rubber seal between casing and drive shaft.	GRP / FRP as standard; PE, PVC, PVDF, SS as optional	
Type of Impeller Impellers are of Single Inlet Single Width (SISW) type. Impeller with heavy-duty cast in hub. The hubs are designed for use with taper bushes to guarantee high reliability at high peripheral speeds.	GRP / FRP as standard; PE, PVC, PVDF, SS as optional; Backward Curve	
Performance tested Fan rated in accordance with: Impeller is statically and dynamically balanced in two planes.	ISO 5801 / AMCA 210 G2.5 of VDI 2060	
Fan Base and Support Heavy gauge mild steel with maximum protection in the most adverse condition	Hot-dipped galvanised	
Type of Drive	Belt Driven	
Drive Shaft Solid type ground and polished to give tight, accurate bearing and hubs fit.	EN 10084-C45 / ISO 683-3 or AISI C-1045	
Bearing Belt driven flange mounted bearing housings type. Fitted with two standard anti friction bearings with acid proof seal. L10 life	Cast type Grooved balls	
Fan Drive Fan and Motor Pulley drive come with taper bush type balanced to: Vee belts conform to:	ISO 4183:2026 ISO 4148:2004(E)	
Electric motor Standard Flameproof Tropicalised Three Phase:	 Yes / No Yes / No Yes / No 380~415 volts 50/60 Hz	
Special Accessories Required Inspection View Port Anti-vibration spring mounting Motor Guard Motor slide rails Belt guard Inlet sleeve with clamping bands Splinter protection cover Manual / Semi / Automatic greasing system	 Yes / No Yes / No Yes / No Yes / No Yes / No Yes / No Yes / No Yes / No	
Optional Requirement Temperature (ºC) Casing material Impeller material Fan Base and Support Flame Retardant Ultra Violet protection	 80 PA / PC / PVC / PVDF PA / PC / PVC / PVDF SS304 / SS316 Yes / No Yes / No	
Electrostatic Discharge Anti-static Static dissipative Conductive	 Yes / No Yes / No Yes / No	

Maximum operating sound power level (dB re10^{-12}W):

Octave band mid frequency (Hz)	63	125	250	500	1K	2K	4K	8K
Specified								
Offered								

Description	Specified	Offered
Wolter Chemco Chemical Resistant Centrifugal Fan Model: CHEM 800-1000-1000 to 1250-1800-1800 DD (Direct Driven) Fan Location	Chemical Resistant Centrifugal Fan	
Volume m^3/h External static pressure Pa Fan speed min^{-1} Brake-Input kW Motor-Output kW Full load Current A A-weighted Sound power level dB(A) Fan Weight Kg Standard Colour	PANTONE 430	
Type of Casing Fibre Glass-Reinforced Plastic (GRP/FRP), Vinyl ester grade. Come with PP back plate can be removed for changing of rotation and maintenance. Rectangular outlet flange for easy duct connection. Max. Temp. 100ºC. No metal parts are situated in the airflow to eliminate the risk of corrosion. Casings with drain outlets at lowest point. Casing can be rotated to suit different discharge positions. C/W back draft rubber seal between casing and drive shaft.	GRP / FRP as standard; PE, PVC, PVDF, SS as optional	
Type of Impeller Impellers are of Single Inlet Single Width (SISW) type. Impeller with heavy-duty cast in hub. The hubs are designed for use with taper bushes to guarantee high reliability at high peripheral speeds.	GRP / FRP as standard; PE, PVC, PVDF, SS as optional; Backward Curve	
Performance tested Fan rated in accordance with: Impeller is statically and dynamically balanced in two planes.	ISO 5801 / AMCA 210 G2.5 of VDI 2060	
Fan Base and Support Heavy gauge mild steel with maximum protection in the most adverse condition	Hot-dipped galvanised	
Type of Drive	Direct Driven	
Bearing Box Rolling bearings (deep groove ball, spherical roller, etc.) or hydrodynamic sliding bearings can be utilized, chosen based on load and speed requirements. L10 life	Cast Iron Type Grooved balls	
Coupling	Steel	
Motor Drive Shaft Solid type ground and polished to give tight, accurate bearing fit.	EN 10084-C45 / ISO 683-3 or AISI C-1045	
Motor Bearing Fitted with two standard anti-friction bearings with acid proof seal. L10 life	Grooved balls	
Electric motor Standard Flameproof Tropicalised Three Phase:	 Yes / No Yes / No Yes / No 380~415 volts 50/60 Hz	
Special Accessories Required Inspection View Port Anti-vibration spring mounting Inlet sleeve with clamping bands Splinter protection cover	 Yes / No Yes / No Yes / No Yes / No	
Optional Requirement Temperature (ºC) Casing material Impeller material Fan Base and Support Flame Retardant Ultra Violet protection	 80 PA / PC / PVC / PVDF PA / PC / PVC / PVDF SS304 / SS316 Yes / No Yes / No	
Electrostatic Discharge Anti-static Static dissipative Conductive	 Yes / No Yes / No Yes / No	

Maximum operating sound power level (dB re10^{-12}W):

Octave band mid frequency (Hz)	63	125	250	500	1K	2K	4K	8K
Specified								
Offered								

Description	Specified	Offered
Wolter Chemco Chemical Resistant Centrifugal Fan Model CHEM 800-1000-1000 to 1250-1800-1800 BD (Belt Driven) Fan Location	Chemical Resistant Centrifugal Fan	
Volume m^3/h External static pressure Pa Fan speed min^{-1} Brake-Input kW Motor-Output kW Full load Current A A-weighted Sound power level dB(A) Fan Weight Kg Standard Colour	PANTONE 430	
Type of Casing Fibre Glass-Reinforced Plastic (GRP/FRP), Vinyl ester grade. Come with PP back plate can be removed for changing of rotation and maintenance. Rectangular outlet flange for easy duct connection. Max. Temp. 100ºC. No metal parts are situated in the airflow to eliminate the risk of corrosion. Casings with drain outlets at lowest point. Casing can be rotated to suit different discharge positions. C/W back draft rubber seal between casing and drive shaft.	GRP / FRP as standard; PE, PVC, PVDF, SS as optional	
Type of Impeller Impellers are of Single Inlet Single Width (SISW) type. Impeller with heavy-duty cast in hub. The hubs are designed for use with taper bushes to guarantee high reliability at high peripheral speeds.	GRP / FRP as standard; PE, PVC, PVDF, SS as optional; Backward Curve	
Performance tested Fan rated in accordance with: Impeller is statically and dynamically balanced in two planes.	ISO 5801 / AMCA 210 G2.5 of VDI 2060	
Fan Base and Support Heavy gauge mild steel with maximum protection in the most adverse condition	Hot-dipped galvanised	
Type of Drive	Belt Driven	
Drive Shaft Solid type ground and polished to give tight, accurate bearing and hubs fit.	EN 10084-C45 / ISO 683-3 or AISI C-1045	
Bearing Belt driven flange mounted bearing housings type. Fitted with two standard anti friction bearings with acid proof seal. L10 life	Cast type Grooved balls	
Fan Drive Fan and Motor Pulley drive come with taper bush type balanced to: Vee belts conform to:	ISO 4183:2026 ISO 4148:2004(E)	
Electric motor Standard Flameproof Tropicalised Three Phase:	 Yes / No Yes / No Yes / No 380~415 volts 50/60 Hz	
Special Accessories Required Inspection View Port Anti-vibration spring mounting Motor Guard Motor slide rails Belt guard Inlet sleeve with clamping bands Splinter protection cover Manual / Semi / Automatic greasing system	 Yes / No Yes / No Yes / No Yes / No Yes / No Yes / No Yes / No Yes / No	
Optional Requirement Temperature (ºC) Casing material Impeller material Fan Base and Support Flame Retardant Ultra Violet protection	 80 PA / PC / PVC / PVDF PA / PC / PVC / PVDF SS304 / SS316 Yes / No Yes / No	
Electrostatic Discharge Anti-static Static dissipative Conductive	 Yes / No Yes / No Yes / No	

Maximum operating sound power level (dB re10^{-12}W):

Octave band mid frequency (Hz)	63	125	250	500	1K	2K	4K	8K
Specified								
Offered								

Sound power levels

This term refers to the power which a source radiates as sound. Sound power levels are expressed in decibels with a reference level of 1 picoWatt. The sound power level of a source remains the same regardless of its environment and the distance to the listener.

If the sound power frequency spectrum is needed, for as follows: example, the design of sound attenuators, the A- rated sound power levels at particular octave band frequency L_{WA} can be calculated by subtracting the relative sound L_{wrel}.

$$L_{WA} = L_{wi} + L_{wrel}$$

Sound pressure level

These are pressure fluctuations generated by a source expressed in decibels with a reference level of 20 µPa. The sound pressure level varies with the distance of a sound source to the listener and its environment.

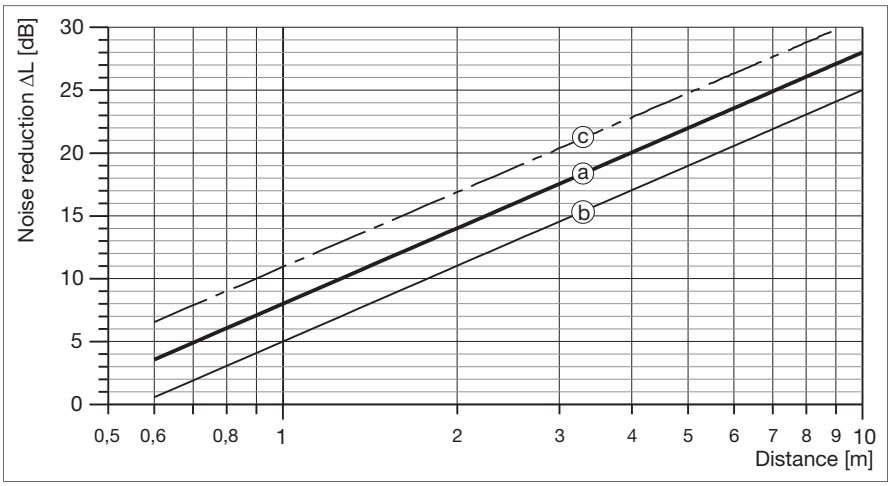

Sound level reduction half sphere

a: without reflexion
b: with reflexion
c: full sphere without reflexion

Frequencies

Sound is split into different frequencies. Frequencies of human hearing range from about 20 cycles per second (Hz) to 20.000 cycles per second (Hz). For practical purposes, WOLTER publishes noise data in eight octave bands with the centre frequencies of (63,) 125, 250, 500, 1000, 2000, 4000 and 8000 Hz.

Each fan has its own specific correction factor which is to be deducted from sound power according to the octave band and is shown on next page 75 ~77.

A-weighted sound pressure level in dB(A)

The human ear is more sensitive to sound in some frequencies than in others. The A-weighting is an attempt to reflect this natural perception of sound. The A-weighting is a set of figures which are applied to the sound pressure levels. The levels in each of the octave bands are added logarithmically to give a single figure. The A-weighting over the octave band is as follows:

Table 1)

Frequency [Hz]	63	125	250	500	1000	2000	4000	8000
A-weighting [dB]	-26,2	-16,1	-8,6	-3,2	0	+1,2	+1,0	-1,1

Table 2)
Addition of sound levels

Difference between two sound levels [dB]	Add to the higher level [dB]
0 - 1	3
2 - 3	2
4 - 9	1
≥10	0

$$L_{\Sigma} = 10 \cdot \lg\left(10^{0,1 \cdot L_1} + 10^{0,1 \cdot L_2} + \ldots + 10^{0,1 \cdot L_n}\right)$$

where:
L_1 = sound level of a source 1
L_{Σ} = resulting summation sound level

Summation of several congeneric sound levels

$$L_{\Sigma} = L_1 + 10 \cdot \lg(z)$$

where:
z = number of sources
L_1 = sound level of a single source
L_{Σ} = resulting summation sound level

Relative Sound Power Frequency Spectrum (L_{wrel}) [dB]

Model Size	Speed rpm	63 Hz	125 Hz	250 Hz	500 Hz	1.0K Hz	2.0K Hz	4.0K Hz	8.0K Hz
CHEM 200-315X-317	3150	-17.5	-17.5	-0.7	-12.2	-16.3	-19.3	-24.2	-28.4
CHEM 200-315X-317	2250	-17.8	-8.6	-1.1	-16.3	-17.4	-22.1	-26.6	-31.1
CHEM 200-315X-317	1470	-17.2	-0.6	-13.3	-16.1	-19.6	-24.5	-28.7	-33.8
CHEM 250-315P-317	3150	-6.9	-6.9	-3.9	-13.9	-15.1	-16.3	-16.3	-19.0
CHEM 250-315P-317	2250	-7.2	-4.9	-4.6	-16.0	-15.5	-16.7	-17.3	-21.4
CHEM 250-315P-317	1470	-5.6	-3.0	-13.3	-13.7	-15.1	-15.0	-18.0	-22.8
CHEM 250-355P-359	3150	-9.4	-9.4	-4.5	-8.0	-10.4	-11.7	-13.3	-18.0
CHEM 250-355P-359	2250	-9.3	-6.8	-4.4	-9.6	-10.9	-12.3	-14.9	-21.7
CHEM 250-355P-359	1440	-8.6	-3.8	-7.8	-9.8	-11.2	-12.9	-18.2	-26.9
CHEM 250-355X-359	3150	-9.9	-9.9	-4.1	-8.1	-9.6	-11.5	-13.7	-17.9
CHEM 250-355X-359	2250	-10.0	-6.9	-4.2	-9.5	-10.3	-12.5	-15.4	-21.3
CHEM 250-355X-359	1460	-9.3	-3.5	-8.0	-9.1	-11.1	-13.4	-18.0	-25.7
CHEM 250-400X-403	3150	-10.7	-10.7	-5.0	-6.8	-9.3	-10.9	-13.1	-17.3
CHEM 250-400X-403	2250	-10.5	-8.0	-4.7	-8.1	-9.8	-11.6	-14.7	-19.8
CHEM 250-400X-403	1430	-10.2	-4.4	-6.7	-8.9	-10.6	-13.0	-17.5	-23.3
CHEM 315-355P-359	3150	-8.9	-8.9	-6.0	-9.4	-13.7	-10.5	-9.5	-19.8
CHEM 315-355P-359	2250	-8.6	-7.0	-5.8	-11.8	-12.6	-8.6	-13.3	-24.5
CHEM 315-355P-359	1480	-8.1	-5.3	-9.1	-12.9	-9.3	-9.1	-20.0	-28.9
CHEM 315-355X-359	3150	-10.7	-10.7	-11.6	-5.1	-11.6	-5.1	-16.1	-20.8
CHEM 315-355X-359	2250	-9.5	-11.0	-7.2	-6.6	-7.8	-7.3	-18.7	-21.2
CHEM 315-355X-359	1480	-10.3	-11.2	-4.8	-11.2	-4.6	-16.7	-20.6	-25.0
CHEM 315-400P-403	3150	-7.9	-7.9	-6.0	-9.4	-13.7	-11.6	-17.3	-22.0
CHEM 315-400P-403	2250	-7.5	-6.4	-5.8	-11.7	-12.5	-13.0	-19.7	-23.9
CHEM 315-400P-403	1470	-6.8	-5.0	-8.9	-12.6	-10.5	-16.9	-21.3	-26.6
CHEM 315-400X-403	3150	-11.2	-11.2	-8.3	-3.9	-12.7	-9.0	-15.9	-20.8
CHEM 315-400X-403	2250	-10.4	-9.7	-4.8	-6.9	-11.1	-10.0	-18.3	-21.5
CHEM 315-400X-403	1480	-10.7	-7.7	-3.7	-12.4	-8.3	-16.2	-20.5	-24.0
CHEM 315-450P-453	2800	-4.3	-4.3	-7.8	-14.6	-16.8	-18.3	-21.8	-28.2
CHEM 315-450P-453	2000	-3.6	-5.3	-7.2	-15.4	-16.7	-18.8	-24.3	-29.6
CHEM 315-450P-453	1500	-2.3	-5.8	-12.2	-14.6	-16.1	-19.3	-25.6	-29.7
CHEM 315-450X-453	3150	-3.5	-3.5	-11.7	-16.2	-17.4	-23.5	-27.7	-34.1
CHEM 315-450X-453	2250	-2.1	-6.4	-10.2	-15.0	-18.7	-24.0	-29.3	-34.4
CHEM 315-450X-453	1600	-1.0	-9.2	-13.7	-14.8	-20.8	-25.0	-31.4	-34.5
CHEM 315-500X-504	2800	-4.4	-4.4	-6.8	-17.5	-18.9	-19.7	-23.0	-29.9
CHEM 315-500X-504	2000	-4.2	-4.5	-6.7	-18.9	-18.9	-20.6	-26.3	-31.4
CHEM 315-500X-504	1450	-2.4	-4.8	-15.2	-17.0	-17.7	-20.7	-27.7	-30.3
CHEM 400-450P-453	2800	-4.3	-4.3	-7.8	-14.6	-16.8	-18.3	-21.8	-28.2
CHEM 400-450P-453	2000	-3.6	-5.3	-7.2	-15.4	-16.7	-18.8	-24.3	-29.6
CHEM 400-450P-453	1500	-2.3	-5.8	-12.2	-14.6	-16.1	-19.3	-25.6	-29.7
CHEM 400-450X-453	3150	-7.4	-7.4	-9.2	-6.1	-6.7	-14.0	-19.6	-24.7
CHEM 400-450X-453	2250	-7.0	-8.2	-7.6	-5.0	-9.4	-16.6	-21.6	-26.7
CHEM 400-450X-453	1500	-6.5	-8.3	-5.0	-6.1	-13.6	-19.0	-24.2	-29.2
CHEM 400-500P-504	2500	-4.0	-4.0	-9.6	-16.0	-16.2	-15.9	-19.1	-25.6
CHEM 400-500P-504	1800	-3.1	-5.7	-8.7	-15.7	-14.9	-15.9	-21.3	-26.9
CHEM 400-500P-504	1280	-1.8	-7.4	-13.7	-14.1	-13.7	-16.7	-23.2	-27.3

Nb: Sound power frequency spectrum calculated with this L_{wrel} are not licensed by AMCA.

Relative Sound Power Frequency Spectrum (L_{wrel}) [dB]

Model Size	Speed rpm	63 Hz	125 Hz	250 Hz	500 Hz	1.0K Hz	2.0K Hz	4.0K Hz	8.0K Hz
CHEM 400-500X-504	2800	-3.8	-3.8	-10.3	-16.2	-18.3	-16.4	-23.0	-27.7
CHEM 400-500X-504	2000	-2.7	-5.4	-10.1	-16.8	-16.1	-17.6	-24.9	-27.8
CHEM 400-500X-504	1280	-1.3	-8.7	-14.3	-15.7	-14.2	-21.5	-25.5	-28.1
CHEM 400-560X-570	2500	-4.0	-4.0	-8.5	-18.4	-21.0	-19.7	-27.0	-32.6
CHEM 400-560X-570	1800	-3.4	-4.8	-8.3	-20.2	-19.3	-21.8	-29.5	-33.6
CHEM 400-560X-570	1200	-1.7	-6.6	-16.5	-18.5	-17.6	-25.1	-30.5	-33.8
CHEM 450-500P-504	2500	-5.1	-5.1	-8.1	-10.8	-13.1	-17.2	-19.0	-25.1
CHEM 450-500P-504	1800	-4.4	-5.8	-7.6	-11.1	-14.4	-17.2	-21.0	-25.6
CHEM 450-500P-504	1200	-3.4	-6.6	-9.2	-11.6	-15.6	-17.5	-23.6	-24.2
CHEM 450-560P-570	2250	-5.6	-5.6	-8.7	-12.7	-16.4	-17.1	-19.9	-23.7
CHEM 450-560P-570	1600	-4.8	-6.7	-8.0	-14.1	-16.0	-17.5	-20.7	-26.2
CHEM 450-560P-570	1200	-4.1	-7.2	-10.8	-14.7	-15.4	-18.1	-21.7	-28.6
CHEM 450-560X-570	2500	-6.1	-6.1	-7.4	-8.8	-11.6	-13.2	-18.0	-23.1
CHEM 450-560X-570	1800	-5.7	-5.9	-7.6	-9.0	-12.2	-14.3	-20.4	-24.2
CHEM 450-560X-570	1000	-4.5	-6.2	-7.8	-10.8	-12.4	-18.3	-22.5	-25.5
CHEM 450-630X-631	2000	-6.0	-6.0	-6.9	-6.8	-16.9	-22.8	-24.3	-27.9
CHEM 450-630X-631	1400	-5.2	-5.8	-5.5	-10.3	-20.3	-22.8	-25.0	-29.5
CHEM 450-630X-631	920	-4.4	-5.3	-5.9	-16.6	-21.5	-23.0	-26.9	-31.4
CHEM 500-630X-631	2000	-5.8	-5.8	-7.6	-9.2	-12.1	-13.8	-19.7	-23.9
CHEM 500-630X-631	1400	-5.1	-6.0	-7.5	-10.0	-12.0	-15.8	-21.4	-24.7
CHEM 500-630X-631	900	-4.5	-6.1	-7.5	-10.7	-12.8	-18.9	-22.7	-25.7
CHEM 500-710X-722	1800	-5.8	-5.8	-6.6	-7.3	-18.3	-23.0	-24.5	-28.5
CHEM 500-710X-722	1250	-5.0	-5.8	-5.3	-12.1	-20.9	-22.8	-25.5	-30.0
CHEM 500-710X-722	820	-4.3	-4.5	-6.8	-17.7	-21.4	-23.1	-27.3	-31.8
CHEM 560-710X-722	1800	-5.7	-5.7	-7.7	-9.1	-12.3	-14.4	-20.5	-24.3
CHEM 560-710X-722	1250	-4.9	-6.1	-7.5	-10.4	-12.0	-16.7	-21.8	-25.0
CHEM 560-710X-722	800	-4.3	-5.8	-8.1	-10.4	-13.3	-19.3	-22.8	-25.8
CHEM 560-800X-824	1600	-5.6	-5.6	-6.1	-8.7	-19.5	-23.0	-24.8	-29.0
CHEM 560-800X-824	1120	-4.8	-5.7	-5.2	-13.9	-21.3	-22.9	-26.1	-30.6
CHEM 560-800X-824	730	-4.1	-4.0	-8.1	-18.4	-21.2	-23.2	-27.6	-32.1
CHEM 630-800X-824	1600	-5.5	-5.5	-7.6	-9.9	-12.3	-15.1	-21.1	-24.6
CHEM 630-800X-824	1120	-4.7	-6.2	-7.6	-10.6	-12.1	-17.5	-22.2	-25.3
CHEM 630-800X-824	710	-4.3	-5.7	-8.2	-10.2	-13.9	-19.6	-22.9	-25.9
CHEM 630-900X-912	1400	-5.4	-5.4	-5.7	-10.5	-20.5	-23.0	-25.2	-29.7
CHEM 630-900X-912	1000	-4.6	-5.5	-5.5	-15.5	-21.5	-22.9	-26.6	-31.1
CHEM 630-900X-912	650	-4.0	-3.6	-9.7	-18.9	-21.1	-23.6	-28.1	-32.5
CHEM 710-900X-912	1400	-5.4	-5.4	-7.8	-10.3	-12.3	-16.1	-21.7	-25.0
CHEM 710-900X-912	1000	-4.5	-6.2	-7.8	-10.8	-12.4	-18.3	-22.5	-25.5
CHEM 710-900X-912	630	-4.2	-5.6	-8.4	-10.0	-14.7	-19.9	-23.0	-26.0
CHEM 710-1000X-1000	1250	-5.3	-5.3	-5.5	-12.4	-21.1	-23.1	-25.8	-30.3
CHEM 710-1000X-1000	900	-4.5	-5.2	-5.9	-16.9	-21.6	-23.1	-27.1	-31.6
CHEM 710-1000X-1000	590	-3.9	-3.3	-11.2	-19.2	-21.0	-23.9	-28.5	-32.9
CHEM 800-1000X-1000	1250	-5.2	-5.2	-7.9	-10.7	-12.4	-17.1	-22.2	-25.4
CHEM 800-1000X-1000	900	-4.5	-6.1	-7.5	-10.7	-12.8	-18.9	-22.7	-25.7
CHEM 800-1000X-1000	570	-4.1	-5.5	-8.5	-10.0	-15.3	-20.0	-23.1	-26.2

Nb: Sound power frequency spectrum calculated with this L_{wrel} are not licensed by AMCA.

Relative Sound Power Frequency Spectrum (L_{wrel}) [dB]

Model Size	Speed rpm	63 Hz	125 Hz	250 Hz	500 Hz	1.0K Hz	2.0K Hz	4.0K Hz	8.0K Hz
CHEM 800-1120X-1120	1120	-5.1	-5.1	-5.5	-14.2	-21.6	-23.2	-26.3	-30.9
CHEM 800-1120X-1120	800	-4.3	-4.4	-7.1	-17.8	-21.4	-23.1	-27.4	-31.9
CHEM 800-1120X-1120	530	-3.7	-3.3	-12.7	-19.4	-20.9	-24.3	-28.9	-33.3
CHEM 900-1120X-1120	1120	-5.1	-5.1	-8.1	-11.1	-12.6	-18.0	-22.6	-25.7
CHEM 900-1120X-1120	800	-4.3	-5.8	-8.1	-10.4	-13.3	-19.3	-22.8	-25.8
CHEM 900-1120X-1120	510	-4.0	-5.5	-8.5	-10.1	-16.0	-20.2	-23.3	-26.3
CHEM 900-1250X-1250	1000	-4.9	-4.9	-5.8	-15.8	-21.8	-23.3	-26.9	-31.4
CHEM 900-1250X-1250	710	-4.1	-3.9	-8.4	-18.5	-21.1	-23.3	-27.7	-32.2
CHEM 900-1250X-1250	470	-3.2	-3.6	-14.2	-19.4	-20.8	-24.7	-29.2	-33.7
CHEM 1000-1250X-1250	1000	-5.0	-5.0	-8.3	-11.3	-12.9	-18.9	-23.0	-26.1
CHEM 1000-1250X-1250	710	-4.3	-5.7	-8.2	-10.2	-13.9	-19.6	-22.9	-25.9
CHEM 1000-1250X-1250	460	-3.9	-5.3	-8.5	-10.5	-16.5	-20.4	-23.4	-26.5
CHEM 1000-1400X-1400	900	-4.5	-5.2	-5.9	-16.9	-21.6	-23.1	-27.1	-31.6
CHEM 1000-1400X-1400	630	-4.0	-3.5	-10.2	-19.0	-21.0	-23.7	-28.2	-32.7
CHEM 1000-1400X-1400	420	-2.4	-4.4	-15.3	-19.3	-20.9	-25.1	-29.6	-34.1
CHEM 1120-1400X-1400	900	-4.5	-6.1	-7.5	-10.7	-12.8	-18.9	-22.7	-25.7
CHEM 1120-1400X-1400	630	-4.2	-5.6	-8.4	-10.0	-14.7	-19.9	-23.0	-26.0
CHEM 1120-1400X-1400	410	-3.6	-5.7	-8.2	-10.8	-16.9	-20.4	-23.5	-26.6
CHEM 1120-1600X-1600	800	-4.3	-4.4	-7.1	-17.8	-21.4	-23.1	-27.4	-31.9
CHEM 1120-1600X-1600	560	-3.8	-3.3	-11.9	-19.4	-21.0	-24.1	-28.7	-33.1
CHEM 1120-1600X-1600	370	-1.8	-5.6	-16.0	-18.9	-20.9	-25.3	-29.8	-34.3
CHEM 1250-1600X-1600	800	-4.3	-5.8	-8.1	-10.4	-13.3	-19.3	-22.8	-25.8
CHEM 1250-1600X-1600	560	-4.1	-5.5	-8.5	-10.0	-15.4	-20.1	-23.2	-26.2
CHEM 1250-1600X-1600	360	-3.4	-5.9	-7.9	-11.5	-17.2	-20.5	-23.5	-26.8
CHEM 1250-1800X-1800	710	-4.1	-3.9	-8.4	-18.5	-21.1	-23.3	-27.7	-32.2
CHEM 1250-1800X-1800	500	-3.5	-3.4	-13.5	-19.4	-20.9	-24.5	-29.0	-33.5
CHEM 1250-1800X-1800	330	-1.2	-7.1	-16.5	-18.7	-21.2	-25.7	-30.1	-34.7

Nb: Sound power frequency spectrum calculated with this L_{wrel} are not licensed by AMCA.

Sales Network

Deutschland

Wolter GmbH.
Maschinen-und Apparatebau KG.
DE-76316 Malsch
T +49 (0) 72 04 / 92 01 0
F +49 (0) 72 04 / 92 01 11
info@wolter.eu

Europe

Denmark:

L.ØLAND VENTILATION A/S
DK-2605 Brøndby
T +45 (0) 70 / 20 19 11
salg@airforce.dk

Netherlands:

DE WIT Ventilatoren BV
NL-3821 CG Amersfoort
T +31 (0) 33 / 76 00 240
info@dewitventilatoren.nl

Sweden:

Nordisk Ventilator AB
SE-142 50 Skogås
T +46 (0) 8 / 72 70 250
se@nordiskventilator.se

Switzerland:

Anson AG Zürich
CH-8055 Zürich
T +41 (0) 44 / 46 11 111
F +41 (0) 44 / 46 13 111
info@anson.ch

OZ Tech SA
CH-1122 Romanel-sur-Morges
T +41 (0) 76 / 41 11 572
info@oztech.ch

United Kingdom:

Wolter (UK) Ltd.
GB-Leicestershire LE65 1AL
T +44 (0) 15 30 / 41 24 73
info@wolteruk.com

Middle East

UAE, Saudi Arabia, Qatar, Lebanon:

Please contact Wolter head office

Wolter GmbH.
Maschinen-und Apparatebau KG.
DE-76316 Malsch
T +49 (0) 72 04 / 92 01 0
F +49 (0) 72 04 / 92 01 11
info@wolter.eu

Asia

China:

Guangdong Wolter Chemco Ventilation Ltd.
Boluo, Huizhou, Guangdong

Dongguan Wolter Chemco Ventilation Ltd.
Shipai, Dongguan, Guangdong
T +86 (0) 769 / 8655 7298
F +86 (0) 769 / 8655 7278
info@wolter.com.hk

Taizhou Wolter Ventilation Co. Ltd.
Hengjie, Luqiao District,
Taizhou, Zhejiang
T +86 (0) 576 / 26 22 666 (26 52 888)
F +86 (0) 576 / 26 56 830

China - Hong Kong, Macau:

Wolter Asia Ltd
Kowloon, Hong Kong
T +852 (0) 2456 0198
F +852 (0) 2456 0290
info@wolter.com.hk

China - Taiwan:

Waxlink International Co., Ltd.
8F-2 No.218 Roosevelt Rd.,
Sec,6, Taipei, Taiwan
T +886 (0) 2 / 8932 1196
F +886 (0) 2 / 8932 1197
waxlink@mail.waxlinktw.com

India:

Wolter Ventilators India Pvt. Ltd.
867 D, Block-A, Sushant Lok, Phase-I,
Gurgaon - 122009 (Haryana)
T +91 (0) 124 2577797, 4261001-3
sales@wolterindia.in

Korea:

Kaceco-Wolter
14-1, Dang-dong, Gunpo-shi,
Gyeonggi-do
T +(82) 0 31 / 4773 104
F +(82) 0 31 / 4773 132
wolter@kaceco.com
info@kaceco.com

Malaysia:

Vibrantech (M) Sdn Bhd.
47200 Petaling Jaya Selangor
T +603 (0) 7847 3500
F +603 (0) 7847 3380
sales@vibrantech-sb.com

Singapore:

Wolter Pte. Ltd.
SG-569738 Singapore
T +65 (0) 63 / 52 95 48
F +65 (0) 63 / 52 95 47
info@wolterfans.com.sg

Thailand:

Wolter Ventilation Co., Ltd.
TH-74130 Samutsakorn
T +66 (0) 2 / 81 38 484
F +66 (0) 2 / 81 10 808
info@wolterventilation.com

Australia

The Sydney Fan Company.
NSW 2147, Sydney, Australia
T +61 (0) 2 / 9624 4000
F +61 (0) 2 / 9624 4100
sales@thesydneyfancompany.com

Wolter GmbH
Maschinen-und Apparatebau KG
Am Wasen 11
DE-76316 Malsch / Germany
T +49 (0) 72 04 / 92 01 0
F +49 (0) 72 04 / 92 01 11
www.wolter.eu
info@wolter.eu

Reference: **R04.B**, October / 2026, Printed in October, 2026

Air in Motion

Wolter Asia Ltd.
Unit 10, 6/F, Blk B, Merit Industrial Centre,
No.94 To Kwa Wan Road, Kowloon, Hong Kong
Tel. +(852) 2456 0198; Fax +(852) 2456 0290

Guangdong Wolter Chemco Ventilation Ltd.
Jigongkeng Administrative Zone, Futian,
Changning, Boluo,Huizhou, Guangdong,
P.R.China
www.wolter.com.hk; info@wolter.com.hk

wolter