6DDWRDC

Wind-Driven Rain Resistant Stationary Louver

Miami-Dade Approved

Miami-Dade County, Florida Notice Of Acceptance Number: 20-1123.06 (Expires 8/25/2026)

RELIABLE by RUSKIN

APPLICATION

The 6DDWRDC is a 6" deep extruded aluminum louver with closely spaced vertical blades that prevent the penetration of wind-driven rain. This louver is designed with exceptional protection against wind-driven rain under severe conditions. It is approved for use in open structures without provisions to manage weather infiltration (dry rooms) and meets requirements for AMCA 540/550, Miami Dade and Florida Building Code.

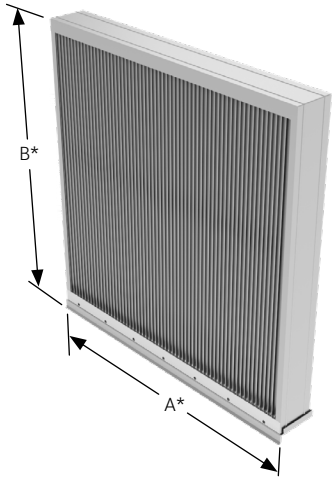

STANDARD CONSTRUCTION

Louver Frame	6" (152) deep, 6063T6 extruded aluminum with .095" (2.4) nominal wall thickness.
Louver Blades	6063T6 extruded aluminum .062" (1.6) nominal wall thickness. Blades are positioned vertically.
Bird Screen	1/2" x .063" (13 x 1.6) square mesh aluminum bird screen in removable frame. Screen adds approximately 1/2" (13) to louver depth.
Finish	Mill.
Minimum Size	12"w x 12"h (305 x 305).
Approximate Shipping Weight	14 lbs. per sq. ft. (68.4 kg/m^2)
Maximum Shipping Section Size	48"w x 120"h (1219 x 3048).
Maximum Overall Assembly Size	Unlimited width x 120"h (3048) with or without damper. Overall assembly consists of individual sections combined in the field (combination of sections in the field not by Reliable).
Installation	Reliable's 6DDWRDC utilizes a continuous angle installation method and must be installed per the appropriate Installation Detail. Reference the appropriate separate Installation Instruction Sheets.

Consult Reliable for additional information.

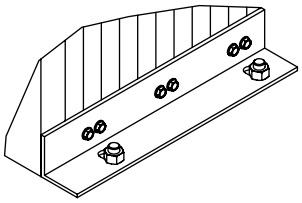

Installation Angle Detail

FEATURES

- The 6DDWRDC passes the Miami-Dade TAS-100A Wind Driven Rain Test without a damper and sloped duct
- The 6DDWRDC Louver is approved for use in open structures without provisions to manage weather infiltration (dry rooms)
- Exceptional windload integrity of ±150 PSF (±7.18 KPa)
- 38% Free Area
- Published free area and pressure drop performance ratings based on testing in accordance with AMCA Publication 500-L
- AMCA540 and AMCA 550 Listed
- Miami-Dade NOA Approval 20-1123.06 (Expires 8/25/2026)

amca WORLDWIDE CERTIFIED RATINGS — WATER PENETRATION, AIR PERFORMANCE, WIND DRIVEN RAIN — AIR MOVEMENT AND CONTROL ASSOCIATION INTERNATIONAL, INC. — www.amca.org

amca INTERNATIONAL LISTED — HIGH VELOCITY RAIN RESISTANT WITH BLADES FULLY OPEN AND IMPACT RESISTANT LOUVER *Enhanced Protection Level E* — See www.AMCA.org for all certified or listed products — This label does not signify AMCA airflow performance certification.

Please reference our website www.reliable.com for up to date LEED® information.

VARIATIONS

- Filter racks
- A variety of bird and insect screens
- Selection of finishes: prime coat, 50% PVDF (modified fluoropolymer), epoxy, Pearledize, 70% PVDF clear and color anodize. (Some variation in anodize color consistency is possible.)

Consult Reliable for other special requirements.

Note:

- Dimensions in inches, parenthesis ( ) indicate millimeters.
- Units can be furnished actual size or with size deducts.

ALL STATED SPECIFICATIONS ARE SUBJECT TO CHANGE WITHOUT NOTICE OR OBLIGATION.

© Reliable August 2020

FREE AREA GUIDE

Free Area Guide shows free area in ft² and m² for various sizes of 6DDWRDC.

Height – Inches and Meters	Width – Inches and Meters																		
	12 0.30	**18** 0.45	**24** 0.60	**30** 0.75	**36** 0.90	**42** 1.05	**48** 1.20	**54** 1.35	**60** 1.50	**66** 1.65	**72** 1.80	**78** 1.95	**84** 2.10	**90** 2.25	**96** 2.40	**102** 2.55	**108** 2.70	**114** 2.85	**120** 3.00
12 0.30	**0.08** 0.01	**0.14** 0.01	**0.20** 0.02	**0.26** 0.02	**0.32** 0.03	**0.38** 0.04	**0.44** 0.04	**0.50** 0.05	**0.56** 0.05	**0.62** 0.06	**0.68** 0.06	**0.74** 0.07	**0.80** 0.07	**0.86** 0.08	**0.92** 0.09	**0.98** 0.09	**1.04** 0.10	**1.10** 0.10	**1.16** 0.11
18 0.45	**0.25** 0.02	**0.44** 0.04	**0.62** 0.06	**0.81** 0.07	**0.99** 0.09	**1.17** 0.11	**1.36** 0.13	**1.54** 0.14	**1.73** 0.16	**1.91** 0.18	**2.09** 0.19	**2.28** 0.21	**2.46** 0.23	**2.65** 0.25	**2.83** 0.26	**3.01** 0.28	**3.20** 0.30	**3.38** 0.31	**3.57** 0.33
24 0.60	**0.42** 0.04	**0.73** 0.07	**1.04** 0.10	**1.35** 0.13	**1.66** 0.15	**1.97** 0.18	**2.28** 0.21	**2.58** 0.24	**2.89** 0.27	**3.20** 0.30	**3.51** 0.33	**3.82** 0.36	**4.13** 0.38	**4.43** 0.41	**4.74** 0.44	**5.05** 0.47	**5.36** 0.50	**5.67** 0.53	**5.98** 0.56
30 0.75	**0.60** 0.06	**1.03** 0.10	**1.46** 0.14	**1.89** 0.18	**2.33** 0.22	**2.76** 0.26	**3.19** 0.30	**3.63** 0.34	**4.06** 0.38	**4.49** 0.42	**4.92** 0.46	**5.36** 0.50	**5.79** 0.54	**6.22** 0.58	**6.66** 0.62	**7.09** 0.67	**7.52** 0.70	**7.95** 0.71	**8.39** 0.78
36 0.90	**0.77** 0.07	**1.32** 0.12	**1.88** 0.17	**2.44** 0.23	**3.00** 0.28	**3.55** 0.33	**4.11** 0.38	**4.67** 0.43	**5.23** 0.49	**5.78** 0.54	**6.34** 0.59	**6.90** 0.64	**7.45** 0.69	**8.01** 0.75	**8.57** 0.80	**9.13** 0.85	**9.68** 0.90	**10.24** 0.95	**10.80** 1.00
42 1.05	**0.94** 0.09	**1.62** 0.15	**2.30** 0.21	**2.98** 0.28	**3.66** 0.34	**4.35** 0.40	**5.03** 0.47	**5.71** 0.53	**6.39** 0.59	**7.07** 0.66	**7.76** 0.72	**8.44** 0.78	**9.12** 0.85	**9.80** 0.91	**10.48** 0.97	**11.16** 1.04	**11.85** 1.10	**12.53** 1.17	**13.21** 1.23
48 1.20	**1.11** 0.10	**1.91** 0.18	**2.72** 0.25	**3.53** 0.33	**4.33** 0.40	**5.14** 0.48	**5.95** 0.55	**6.75** 0.63	**7.56** 0.70	**8.36** 0.78	**9.17** 0.85	**9.98** 0.93	**10.78** 1.00	**11.59** 1.08	**12.40** 1.15	**13.20** 1.23	**14.01** 1.30	**14.81** 1.38	**15.62** 1.45
54 1.35	**1.28** 0.12	**2.21** 0.21	**3.14** 0.29	**4.07** 0.38	**5.00** 0.47	**5.93** 0.55	**6.86** 0.64	**7.79** 0.72	**8.72** 0.81	**9.66** 0.90	**10.59** 0.98	**11.52** 1.07	**12.45** 1.16	**13.38** 1.24	**14.31** 1.33	**15.24** 1.42	**16.17** 1.50	**17.10** 1.59	**18.03** 1.68
60 1.50	**1.45** 0.13	**2.51** 0.23	**3.56** 0.33	**4.62** 0.43	**5.67** 0.53	**6.73** 0.63	**7.78** 0.72	**8.84** 0.82	**9.89** 0.92	**10.95** 1.02	**12.00** 1.12	**13.06** 1.21	**14.11** 1.31	**15.17** 1.41	**16.22** 1.51	**17.28** 1.61	**18.33** 1.70	**19.39** 1.80	**20.44** 1.90
66 1.65	**1.62** 0.15	**2.80** 0.26	**3.98** 0.37	**5.16** 0.48	**6.34** 0.59	**7.52** 0.70	**8.70** 0.81	**9.88** 0.92	**11.06** 1.03	**12.24** 1.14	**13.42** 1.25	**14.60** 1.36	**15.78** 1.47	**16.96** 1.58	**18.14** 1.69	**19.31** 1.80	**20.49** 1.91	**21.67** 2.02	**22.85** 2.13
72 1.80	**1.79** 0.17	**3.10** 0.29	**4.40** 0.41	**5.70** 0.53	**7.01** 0.65	**8.31** 0.77	**9.62** 0.89	**10.92** 1.02	**12.22** 1.14	**13.53** 1.26	**14.83** 1.38	**16.14** 1.50	**17.44** 1.62	**18.74** 1.74	**20.05** 1.86	**21.35** 1.99	**22.86** 2.11	**23.96** 2.23	**25.26** 2.35
78 1.95	**1.96** 0.18	**3.39** 0.32	**4.82** 0.45	**6.25** 0.58	**7.68** 0.71	**9.11** 0.85	**10.53** 0.98	**11.96** 1.11	**13.39** 1.25	**14.82** 1.38	**16.25** 1.51	**17.68** 1.64	**19.10** 1.78	**20.53** 1.91	**21.96** 2.04	**23.39** 2.18	**24.82** 2.31	**26.25** 2.44	**27.68** 2.57
84 2.10	**2.14** 0.20	**3.69** 0.34	**5.24** 0.49	**6.79** 0.63	**8.35** 0.78	**9.90** 0.92	**11.45** 1.07	**13.00** 1.21	**14.56** 1.35	**16.11** 1.50	**17.66** 1.64	**19.22** 1.79	**20.77** 1.93	**22.32** 2.08	**23.87** 2.22	**25.43** 2.36	**26.98** 3.51	**28.53** 2.85	**30.09** 2.80
90 2.25	**2.31** 0.21	**3.98** 0.37	**5.66** 0.53	**7.34** 0.68	**9.02** 0.84	**10.69** 0.99	**12.37** 1.15	**14.05** 1.31	**15.72** 1.46	**17.40** 1.62	**19.08** 1.77	**20.76** 1.93	**22.43** 2.09	**24.11** 2.24	**25.79** 2.40	**27.47** 2.55	**29.14** 2.71	**30.82** 2.87	**32.50** 3.02
96 2.40	**2.48** 0.23	**4.28** 0.40	**6.08** 0.57	**7.88** 0.73	**9.68** 0.90	**11.49** 1.07	**13.29** 1.24	**15.09** 1.40	**16.89** 1.57	**18.69** 1.74	**20.49** 1.91	**22.30** 2.07	**24.10** 2.24	**25.90** 2.41	**27.70** 2.58	**29.50** 2.74	**31.30** 2.91	**33.11** 3.08	**34.91** 3.25
102 2.55	**2.65** 0.25	**4.57** 0.43	**6.50** 0.60	**8.43** 0.78	**10.35** 0.96	**12.28** 1.14	**14.21** 1.32	**16.13** 1.50	**18.06** 1.68	**19.98** 1.86	**21.91** 2.04	**23.84** 2.22	**25.76** 2.40	**27.69** 2.57	**29.61** 2.75	**31.54** 2.93	**33.47** 3.11	**35.39** 3.29	**37.32** 3.47
108 2.70	**2.82** 0.26	**4.87** 0.45	**6.92** 0.64	**8.97** 0.83	**11.02** 1.03	**13.07** 1.22	**15.12** 1.41	**17.17** 1.60	**19.22** 1.79	**21.27** 1.98	**23.33** 2.17	**25.38** 2.36	**27.43** 2.55	**29.48** 2.74	**31.53** 2.93	**33.58** 3.12	**35.63** 3.31	**37.66** 3.50	**39.73** 3.69
114 2.85	**2.99** 0.28	**5.17** 0.48	**7.34** 0.68	**9.52** 0.88	**11.69** 1.09	**13.87** 1.29	**16.04** 1.49	**18.22** 1.69	**20.39** 1.90	**22.57** 2.10	**24.74** 2.30	**26.92** 2.50	**29.09** 2.71	**31.27** 2.91	**33.44** 3.11	**35.62** 3.31	**37.79** 3.51	**39.97** 3.72	**42.14** 3.92
120 3.00	**3.16** 0.29	**5.46** 0.51	**7.76** 0.72	**10.06** 0.94	**12.36** 1.15	**14.66** 1.36	**16.96** 1.58	**19.26** 1.79	**21.56** 2.00	**23.86** 2.22	**26.16** 2.43	**28.46** 2.65	**30.75** 2.86	**33.05** 3.07	**35.35** 3.29	**37.65** 3.50	**39.95** 3.72	**42.25** 3.93	**44.55** 4.14

ALL STATED SPECIFICATIONS ARE SUBJECT TO CHANGE WITHOUT NOTICE OR OBLIGATION.

© Reliable August 2020

PRESSURE DROP

Pressure Drop testing performed on 48″ x 48″ (1219 x 1219) unit.
Tested in accordance with ANSI/AMCA 500-L, Figure 5.5

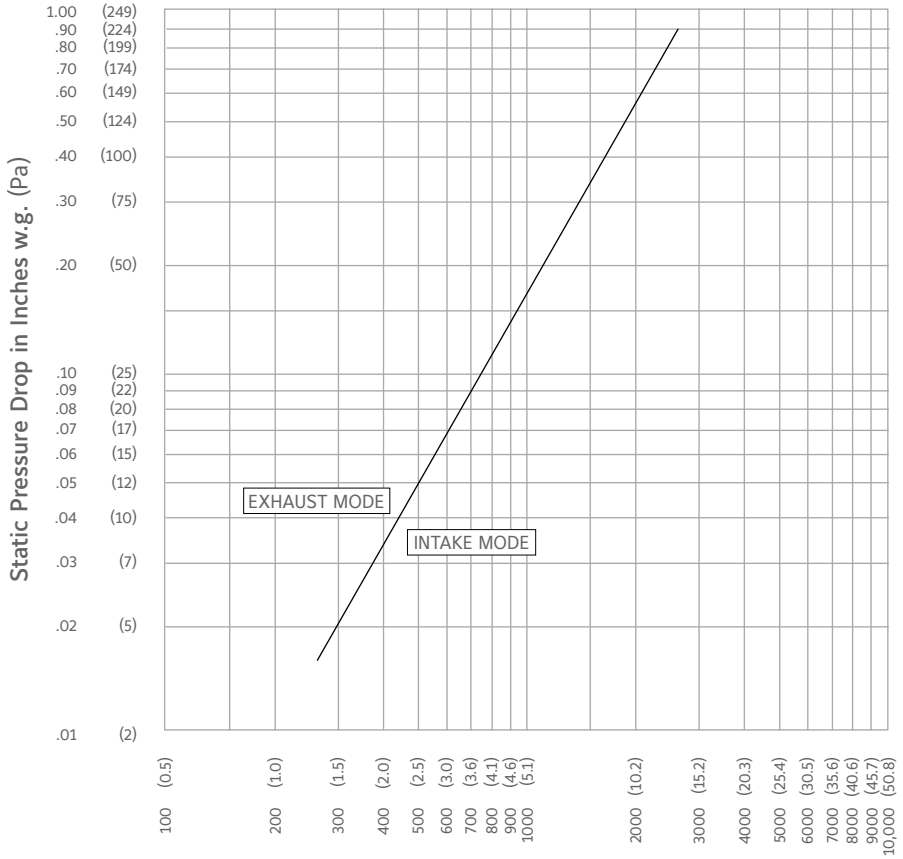

Ratings do not include the effect of a bird screen.

PERFORMANCE DATA

amca INTERNATIONAL LISTED
HIGH VELOCITY RAIN RESISTANT WITH BLADES FULLY OPEN AND IMPACT RESISTANT LOUVER
Enhanced Protection Level E
See www.AMCA.org for all certified or listed products
This label does not signify AMCA airflow performance certification.

Ruskin certifies that the 6DDWRDC shown herein is approved to bear the AMCA Listing Label. The ratings shown are based on tests and procedures performed in accordance with AMCA Publications and comply with the requirements of the AMCA Listing Label Program.

The AMCA Listing Label applies to Wind Borne Debris Impact Resistant Louvers.

The AMCA Listing Label applies to High Velocity Rain Resistant Louver Louvers.

amca WORLDWIDE CERTIFIED RATINGS
WATER PENETRATION
AIR PERFORMANCE
WIND DRIVEN RAIN
AIR MOVEMENT AND CONTROL ASSOCIATION INTERNATIONAL, INC.®
www.amca.org

Ruskin Company certifies that the louver shown herein is licensed to bear the AMCA Seal. The ratings shown are based on tests and procedures performed in accordance with AMCA Publication 511 and comply with the requirements of the AMCA Certified Ratings Program. The AMCA Certified Ratings Seal applies to air performance ratings, water penetration ratings and wind driven rain ratings only.

Water Penetration
Test size 48″ wide X 48″ high (1219 X 1219)
Beginning point of water penetration at .01 oz./sq. ft. is above 1250 fpm (6.4 m/s).

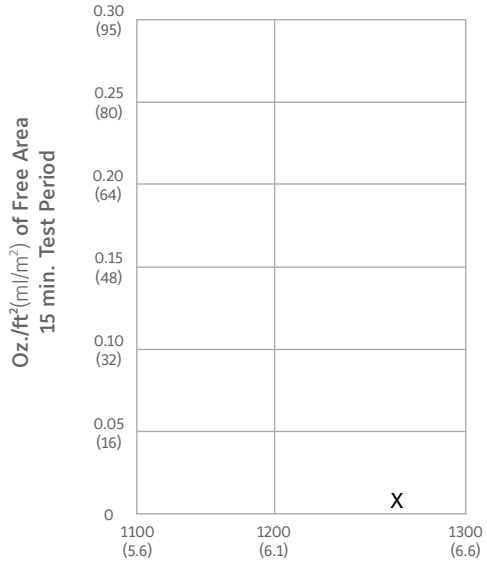

ALL STATED SPECIFICATIONS ARE SUBJECT TO CHANGE WITHOUT NOTICE OR OBLIGATION.
© Reliable August 2020

WIND-DRIVEN RAIN PERFORMANCE – AMCA 500-L WIND-DRIVEN RAIN TEST

Test size is 1m x 1m (39″ x 39″) core area, 1.08m x 1.10m (42 1/2″ x 43 5/16″) nominal. Free Area of test louver is 4.69 ft^2 (.44m^2).

Wind Velocity mph (kph)	Rain Fall Rate In./hr. (mm/hr.)	Core Velocity[1] fpm (m/s)	Airflow cfm (m^3/min)	Free Area Velocity[2] fpm (m/sec.)	Effectiveness Ratio	Class[3, 4]	Discharge Loss Class[5] Intake
29 (46.4)	3 (76)	986 (5.0)	10,615 (300)	2263 (11.5)	99.9%	A	3
50 (80.5)	8 (203)	988 (5.0)	10,641 (301)	2269 (11.5)	99.9%	A	3

NOTES:

1. Core area is the open area of the louver face (face area less louver frames). Core Velocity is the airflow velocity through the Core Area of the louver (1m x 1m). 5 m/s is the maximum core velocity utilized in this test.
2. Free Area of test size is calculated per AMCA standard 500-L.
3. Wind Driven Rain Penetration Classes:

Class	Effectiveness
A	1 to .99
B	0.989 to 0.95
C	0.949 to 0.80
D	Below 0.8

4. The 6DDWRDC provides class A performance at all velocities up to and including 5 m/s core velocity.
5. Discharge Loss Coefficient is calculated by dividing a louvers' actual airflow rate vs. a theoretical airflow for the opening. It provides an indication of the louvers' airflow characteristics.

Class	Discharge Loss Coefficient
1	0.4 and above
2	0.3 to 0.399
3	0.2 to 0.299
4	0.199 and below

(The higher the coefficient, the less resistance to airflow.)

The AMCA Wind Driven Rain Test is performed in a laboratory environment and incorporates controlled wind, water and system airflow effects. In actual field installations, storms may create conditions not considered by the AMCA test. Penthouse and similar applications where wind can pass through multiple louvers in an enclosure is another condition that is not simulated by AMCA tests. These applications can create elevated water penetration rates through any louver. Because of these uncontrolled situations, it is recommended that provisions to manage water penetration through louvers be included in the building design.

CONSTRUCTION INFORMATION

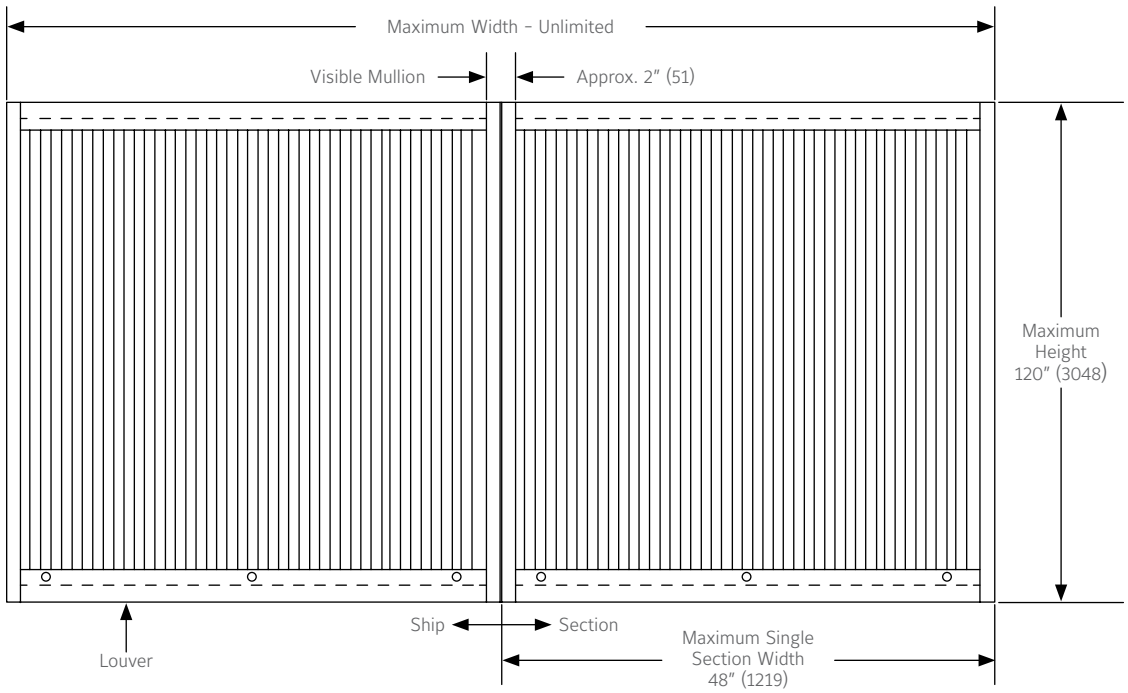

General Notes:

1. Reference separate Installation Instruction sheets (with and without optional damper) for installation details. The installation methods indicated must be complied with for MIAMI-DADE Approval. It is the responsibility of the installing contractor to properly install the louvers per the appropriate detail.
2. On special orders, Reliable may provide submittal and/or shop drawings. Reference these drawings for additional installation information.
3. Louvers wider than the maximum single section width will be shipped in multiple sections and will require field assembly. Field assembly is not by Reliable.
4. Installation channels are shipped loose.

ALL STATED SPECIFICATIONS ARE SUBJECT TO CHANGE WITHOUT NOTICE OR OBLIGATION.
© Reliable August 2020

CONSTRUCTION INFORMATION

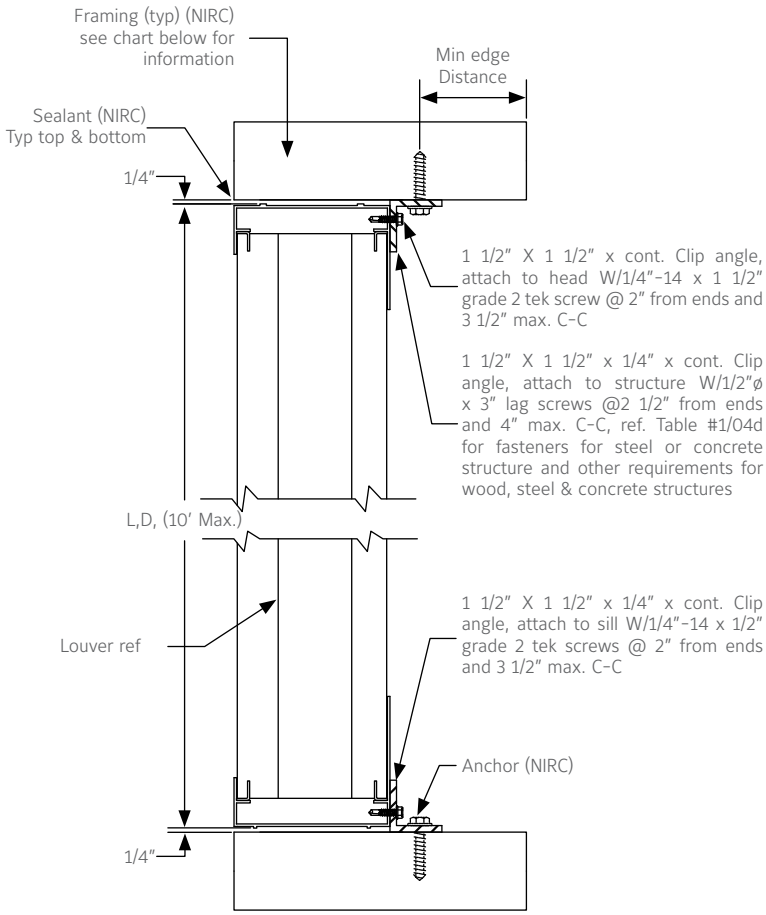

1. HEAD & SILL DETAIL

N.T.S ALTERNATE STRUCTURE - CONCRETE, STEEL FRAME

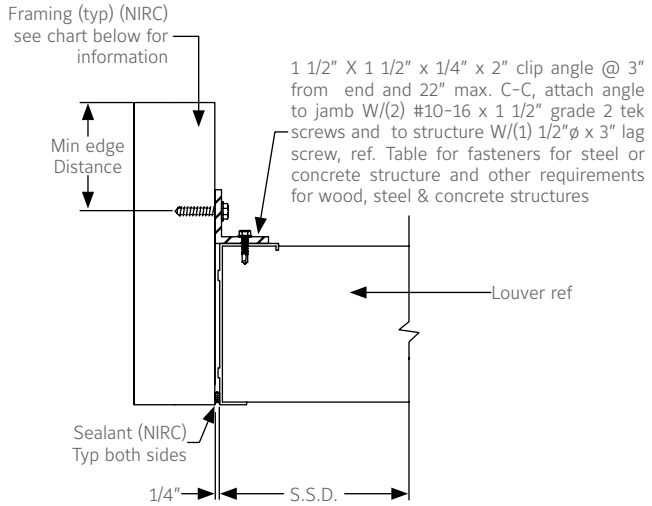

2. JAMB DETAIL

N.T.S ALTERNATE STRUCTURE - CONCRETE, STEEL FRAME

NOTE:

1. The installation shown herein must be followed strictly to ensure compliance with Miami-Dade and Florida Approvals.
2. Aluminum clip angles and #10 screws shown above are provided by Reliable. Anchors for connection to structure are not provided by Reliable.
3. Reliable is not responsible for determining the suitability of the structure, or for gaining approval for non-compliant installation.
4. Shims may be required to achieve consistent clearance between louver and opening on all sides. Shims are not provided by Reliable.
5. Backer rod and sealant are not provided by Reliable.
6. NIRC = Not in Reliable's Contract.

ALL STATED SPECIFICATIONS ARE SUBJECT TO CHANGE WITHOUT NOTICE OR OBLIGATION.

© Reliable August 2020

CONSTRUCTION INFORMATION

Approved Attachments						
Structure	**Connection Type**	**Angle Slot Width**	**Spacing**	**Minimum Embedment**	**Minimum Edge Dist.**	**Send Dist.**
(12 GA min.) Steel framing	1/4" Ø A307 Bolt or 1/4" - 14 Grade 2 SDS	5/16"	3 1/2" Max. C-C	N/A	1/2"	2 1/2"
(4" Min.) Concrete (4000 psi min.)	3/8" Ø HILTI KB TZ Anchor	7/16"	6" Max. C-C	2"	3"	3"
Grout Filled CMU	3/8" Ø HILTI KB III Anchor	7/16"	8" Max. C-C	2 1/2"	4"	4" Min.
(2 - 2 X 10) Wood Framing (Min. S.g.=0.55)	1/2" Ø X 3" A307 LAG Screw	9/16"	4" Max. C-C	3"	2 1/2"	2 1/2"

Note: All fasteners must be installed per the manufacturer's MIAMI-DADE county approved instructions.

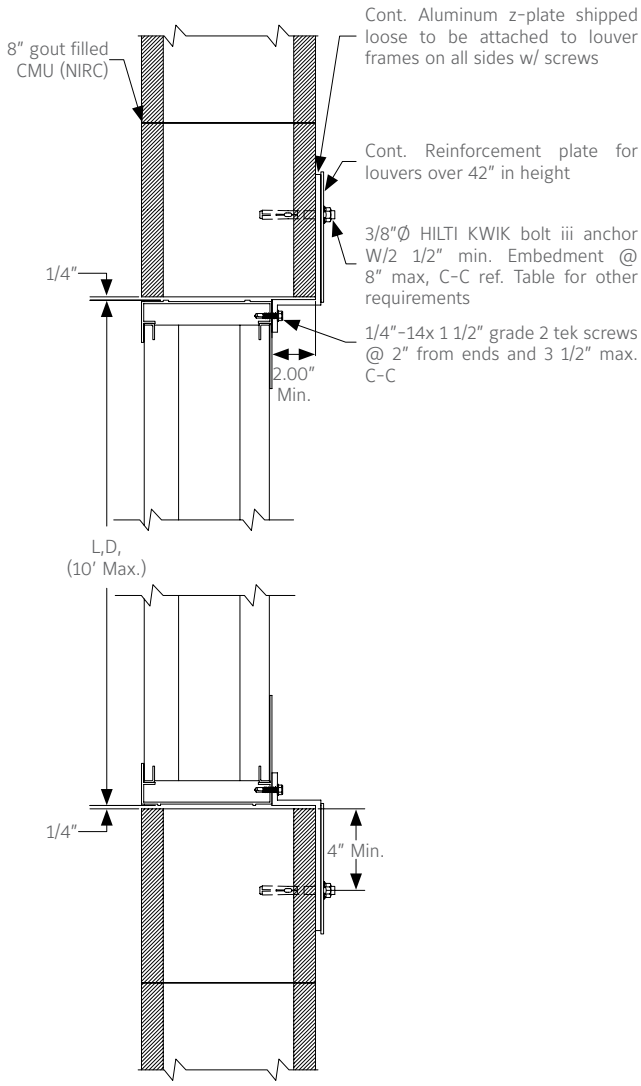

3. HEAD & SILL DETAIL: GROUT FILLED CMU

N.T.S FOR Z- PLATE REF. PART DETAIL 17/4

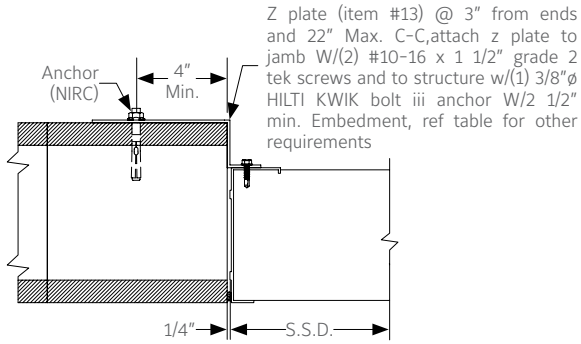

4. JAMB DETAIL: GROUT FILLED CMU

N.T.S FOR Z- PLATE REF. PART DETAIL 18/4

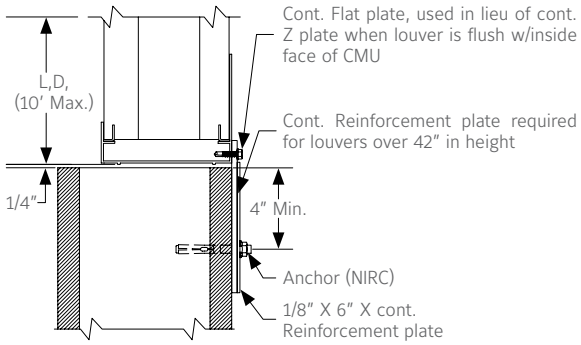

5. HEAD & SILL DETAIL: GROUT FILLED CMU

N.T.S

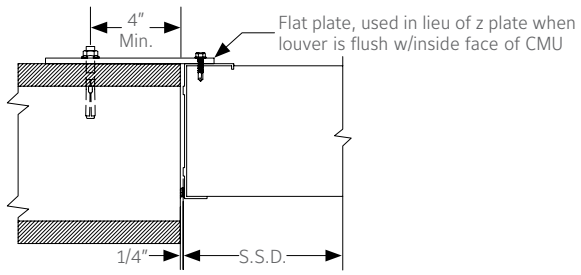

6. JAMB DETAIL: GOUT FILLED CMU

N.T.S

ALL STATED SPECIFICATIONS ARE SUBJECT TO CHANGE WITHOUT NOTICE OR OBLIGATION.

© Reliable August 2020

SUGGESTED SPECIFICATION

Furnish and install louvers as hereinafter specified where shown on plans or as described in schedules. Louvers shall possess stationary vertical blades designed to prevent the penetration of wind driven rain. Louver blades shall be contained within a 6″ (152) frame. Extended sill shall be provided to capture and drain water to exterior of building. Louver components (heads, jambs, sill and blades) shall be factory assembled by the louver manufacturer. Louver sizes too large for shipping shall be built up by the contractor from factory assembled louver sections to provide overall sizes required. Louver design shall incorporate visible mullions on units larger than 48″ x 120″ (1219 x 3048).

Louvers shall be Reliable Model 6DDWRDC extruded 6063T6 aluminum alloy construction as follows:

Material

Frame:	.095″ (2.4) wall thickness, caulking surfaces provided.
Blades:	.062″ (1.6) nominal wall thickness, Blades are mounted vertically.
Extended Sill:	.063″ (2.1) wall thickness with upturned side panels to prevent water leakage.
Screen:	1/2″ x .040″ (13 x 1.6) aluminum bird screen in removable frame.
Finish:	Select finish specification from Reliable Finishes Brochure.

Structural Design

Integral structural supports shall be designed and furnished by the louver manufacturer to carry a wind load of not less than ±150 psf (7.18 kPa).

LINKS TO IMPORTANT DOCUMENTS

Document Title
Finishes and Color Guide
Limited Warranty Document

RELIABLE by RUSKIN

1300 Enterprise Road, P.O. Box 580, Geneva, Alabama 36340
Tel: 334-684-3621
Tel: 800-624-3914
Fax: 800-508-1469

ALL STATED SPECIFICATIONS ARE SUBJECT TO CHANGE WITHOUT NOTICE OR OBLIGATION.

© Reliable August 2020