6RRSVDC

Wind-Driven Rain Resistant Stationary Louver

Miami Dade Approved NOA# 23-1116.22

APPLICATION

The 6RRSVDC is a 6" extruded aluminum louver with closely spaced vertical blades that prevent the penetration of wind-driven rain. This louver is Miami-Dade approved and is designed with exceptional protection against wind-driven rain under severe conditions.

STANDARD CONSTRUCTION

Louver Frame	6"(152) deep, 6063T6 extruded aluminum with .095" (2.4) nominal wall thickness.
Louver Blades	6063T6 extruded aluminum .080" (2.0) nominal wall thickness. Blades are mounted vertically.
Bird Screen	1/2" x .063" (13 x 1.6) square mesh aluminum bird screen in removable frame. Screen adds approximately 1/2" (13) to louver depth.
Finish	Mill.
Minimum Size	12"w x 12"h (305 x 305).
Approximate Shipping Weight	12 lbs. per sq. ft. (58.6 kg/m²)
Maximum Shipping Section Size	48"w x 96"h (1219 x 2438).
Maximum Overall Assembly Size	Unlimited width x 96"h (2438) with or without damper. Overall assembly consists of individual sections combined in the field (combination of sections in the field not by Reliable Products).
Installation	The 6RRSVDC must be installed per the appropriate Installation Detail. Reference the appropriate separate Installation Instruction Sheets.

Consult Reliable for additional information.

FEATURES

- AMCA 540 and AMCA 550 Listed for windborne debris and high velocity rain
- Large missile impact resistant per Miami- Dade TAS-201 test protocol
- Maximum windload with and without damper +160 PSF (7.66 KPa), -140 PSF (-6.70KPa)
- 38% Free Area
- Published free area and pressure drop
- TAS100(A) Compliant
- Performance ratings based on testing in accordance with AMCA Publication 500-L

VARIATIONS

- Filter racks
- A variety of bird and insect screens
- Optional finishes available at additional cost.
  Please see Finishes and Color Guide for more details.
  Contact louversales@ruskin.com with questions
- On 6RRSVDC/5RAFBCD6 Combination Units, the 5RAFBCD6 damper and sleeve are shipped separately and must be combined with the 6RRSVDC in the field (combination of louver/ damper not by Reliable)

Consult Reliable for other special requirements.

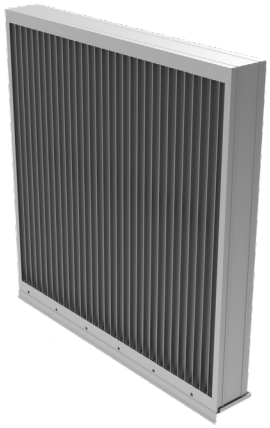

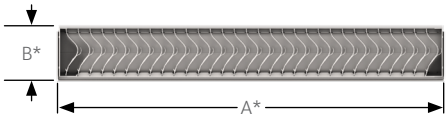

HIGH VELOCITY RAIN RESISTANT AND IMPACT RESISTANT LOUVER
Enhanced Protection
See www.AMCA.org for all certified or listed products
This label does not signify AMCA airflow performance certification.

Ruskin certifies that the 6RRSVDC shown herein is approved to bear the AMCA Listing Label. The ratings shown are based on tests and procedures performed in accordance with AMCA Publications and comply with the requirements of the AMCA Listing Label Program.

The AMCA Listing Label applies to Wind Borne Debris Impact Resistant Louvers.

The AMCA Listing Label applies to High Velocity Rain Resistant Louver Louvers.

Please reference our website www.reliable.com for up to date LEED® information.

Note:
- Dimensions in inches, parenthesis ( ) indicate millimeters.
- Units can be furnished actual size or with size deducts.

ALL STATED SPECIFICATIONS ARE SUBJECT TO CHANGE WITHOUT NOTICE OR OBLIGATION.
© Reliable March 2025

FREE AREA GUIDE

Free Area Guide shows free area in ft² and m² for various sizes of 6RRSVDC.

Height – Inches and Meters	Width – Inches and Meters						
	12 0.30	**18** 0.45	**24** 0.60	**30** 0.75	**36** 0.90	**42** 1.05	**48** 1.20
12 0.30	**0.08** 0.01	**0.14** 0.01	**0.20** 0.02	**0.26** 0.02	**0.33** 0.03	**0.39** 0.04	**0.45** 0.04
18 0.45	**0.26** 0.02	**0.45** 0.04	**0.63** 0.06	**0.82** 0.08	**1.00** 0.09	**1.19** 0.11	**1.38** 0.13
24 0.60	**0.44** 0.04	**0.75** 0.07	**1.06** 0.10	**1.37** 0.13	**1.68** 0.16	**1.99** 0.19	**2.30** 0.21
30 0.75	**0.61** 0.06	**1.05** 0.09	**1.49** 0.12	**1.92** 0.15	**2.36** 0.18	**2.80** 0.21	**3.23** 0.24
36 0.90	**0.79** 0.07	**1.35** 0.13	**1.91** 0.18	**2.48** 0.23	**3.04** 0.28	**3.60** 0.33	**4.16** 0.39
42 1.05	**0.96** 0.09	**1.65** 0.15	**2.34** 0.22	**3.03** 0.28	**3.72** 0.35	**4.41** 0.41	**5.09** 0.47
48 1.20	**1.14** 0.11	**1.95** 0.18	**2.77** 0.26	**3.58** 0.33	**4.40** 0.41	**5.21** 0.48	**6.02** 0.56
54 1.35	**1.32** 0.12	**2.25** 0.21	**3.19** 0.30	**4.13** 0.38	**5.07** 0.47	**6.01** 0.56	**6.95** 0.65
60 1.50	**1.49** 0.14	**2.56** 0.24	**3.62** 0.34	**4.69** 0.44	**5.75** 0.53	**6.82** 0.63	**7.88** 0.73
66 1.65	**1.67** 0.16	**2.86** 0.27	**4.05** 0.38	**5.24** 0.49	**6.43** 0.60	**7.62** 0.71	**8.81** 0.82
72 1.80	**1.84** 0.17	**3.16** 0.29	**4.48** 0.42	**5.79** 0.54	**7.11** 0.66	**8.43** 0.78	**9.74** 0.91
78 1.95	**2.02** 0.19	**3.46** 0.32	**4.90** 0.46	**6.35** 0.59	**7.79** 0.72	**9.23** 0.86	**10.67** 0.99
84 2.10	**2.19** 0.20	**3.76** 0.35	**5.33** 0.50	**6.90** 0.64	**8.47** 0.79	**10.03** 0.93	**11.60** 1.08
90 2.25	**2.37** 0.22	**4.06** 0.38	**5.76** 0.54	**7.45** 0.69	**9.14** 0.85	**10.84** 1.01	**12.53** 1.17
96 2.40	**2.55** 0.24	**4.37** 0.41	**6.18** 0.58	**8.00** 0.74	**9.82** 0.91	**11.64** 1.08	**13.46** 1.25

ALL STATED SPECIFICATIONS ARE SUBJECT TO CHANGE WITHOUT NOTICE OR OBLIGATION.

© Reliable March 2025

PRESSURE DROP

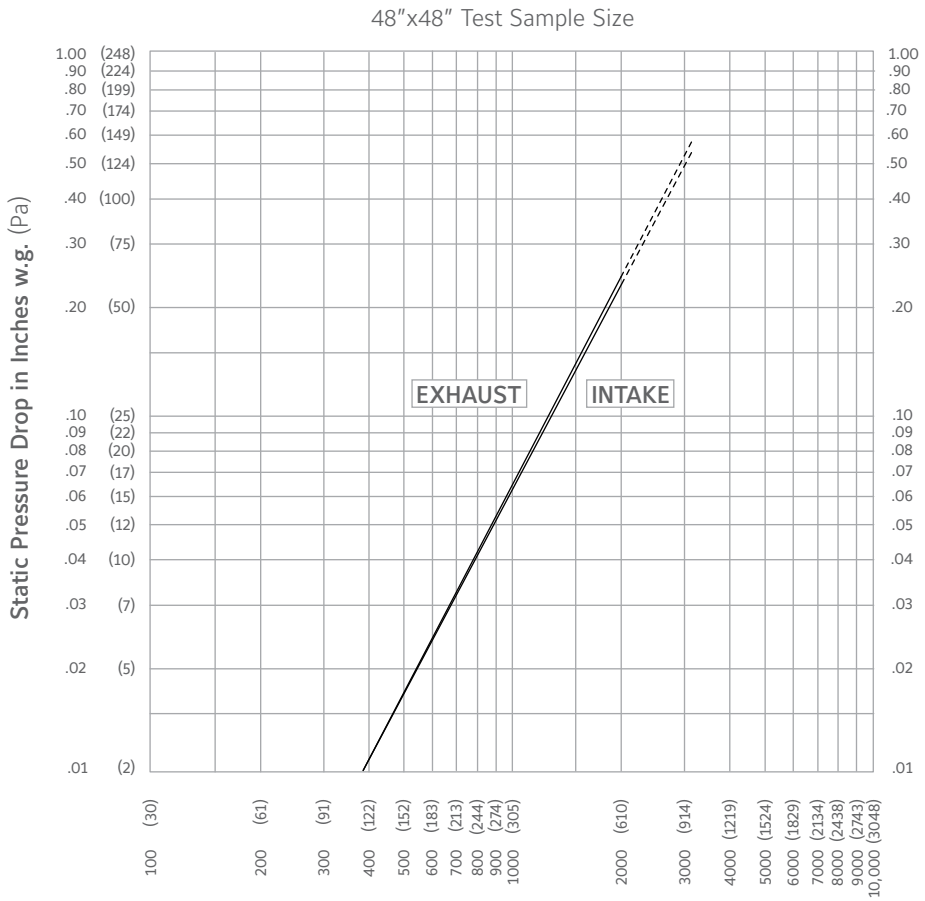

Ratings do not include the effect of a bird screen.

ALL STATED SPECIFICATIONS ARE SUBJECT TO CHANGE WITHOUT NOTICE OR OBLIGATION.
© Reliable March 2025

WIND-DRIVEN RAIN PERFORMANCE AMCA 500-L WIND-DRIVEN RAIN TEST

Test size is 1m x 1m (39" x 39") core area, 1.05m x 1.08m (41 1/4" x 42 5/16") nominal. Free Area of test louver is 4.04 ft^2 (.38m^2).

Wind Velocity mph (kph)	Rain Fall Rate In./hr. (mm/hr.)	Core Velocity$_1$ fpm (m/s)	Airflow cfm (m^3/min)	Free Area Velocity$_2$ fpm (m/sec.)	Effectiveness Ratio	Class$_{3, 4}$	Discharge Loss Class$_5$ Intake
29 (46.4)	3 (76)	992 (5)	10,685 (303)	2645 (13.4)	100%	A	2
50 (80.5)	8 (203)	962 (5)	10,418 (295)	2579 (13.1)	100%	A	2

NOTES:

1. Core area is the open area of the louver face (face area less louver frames). Core Velocity is the airflow velocity through the Core Area of the louver (1m x 1m). 5m/s is the maximum core velocity utilized in this test.
2. Free Area of test size is calculated per AMCA standard 500-L.
3. Wind Driven Rain Penetration Classes:

Class	Effectiveness
A	1 to .99
B	0.989 to 0.95
C	0.949 to 0.80
D	Below 0.8

4. The 6RRSVDC provides Class A performance at all velocities up to and including 5 m/s core velocity.

Ruskin Products certifies that the louver shown herein is licensed to bear the AMCA Seal. The ratings shown are based on tests and procedures performed in accordance with AMCA Publication 511 and comply with the requirements of the AMCA Certified Ratings Program. The AMCA Certified Ratings Seal applies to air performance ratings, water penetration ratings and wind driven rain ratings only.

CONSTRUCTION INFORMATION

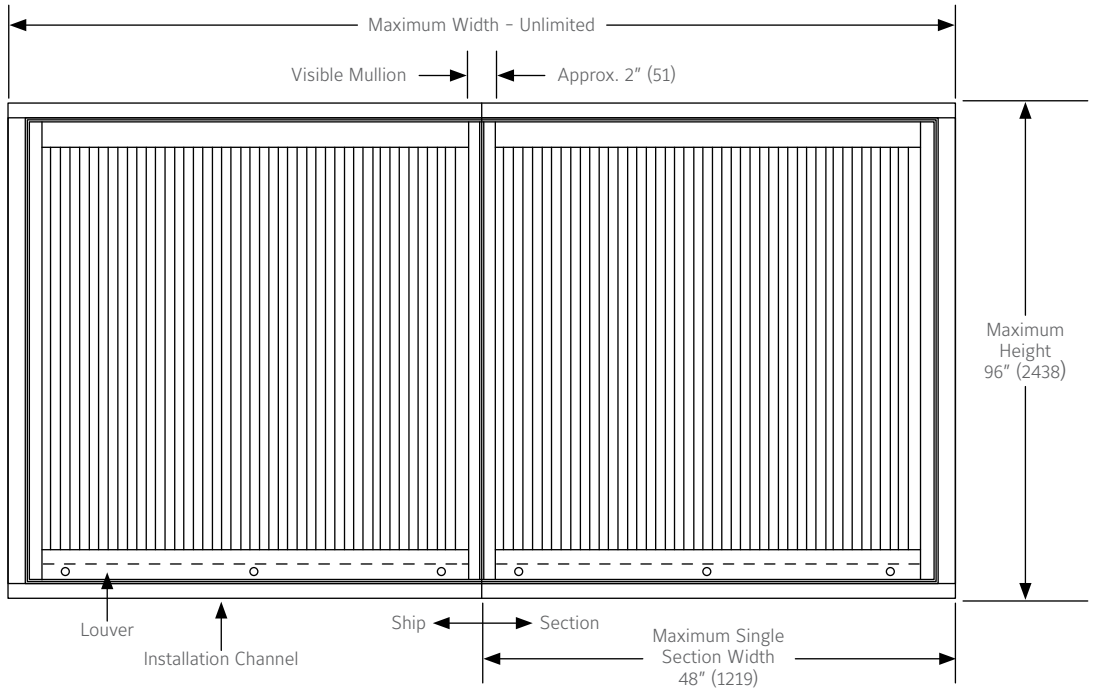

General Notes:

1. Reference separate Installation Instruction sheets (with and without optional damper) for installation details. The installation methods indicated must be complied with for Miami-Dade Approval. It is the responsibility of the installing contractor to properly install the louvers per the appropriate detail.
2. On special orders, Reliable Products may provide submittal and/or shop drawings. Reference these drawings for additional installation information.
3. Louvers wider than the maximum single section width will be shipped in multiple sections and will require field assembly. Field assembly is not by Reliable Products.
4. Installation channels are shipped loose.

CONSTRUCTION INFORMATION

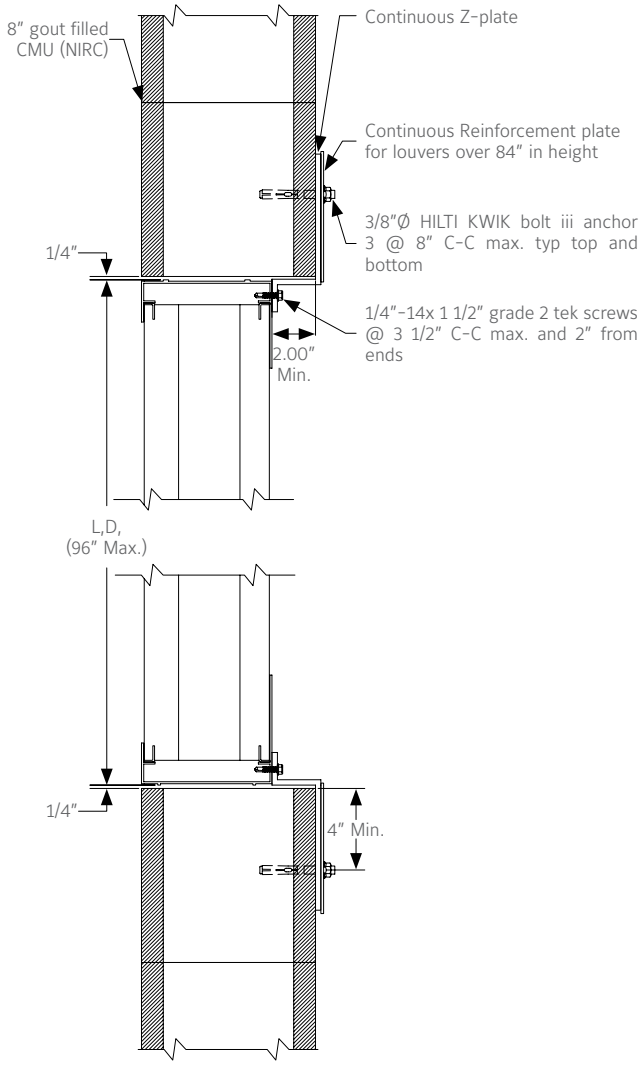

4. HEAD & SILL DETAIL: GROUT FILLED CMU (FRONT FLUSH)
N.T.S

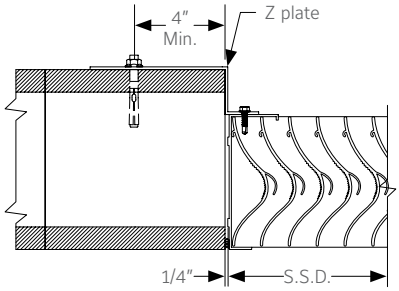

5. JAMB DETAIL: GROUT FILLED CMU (FRONT FLUSH)
N.T.S

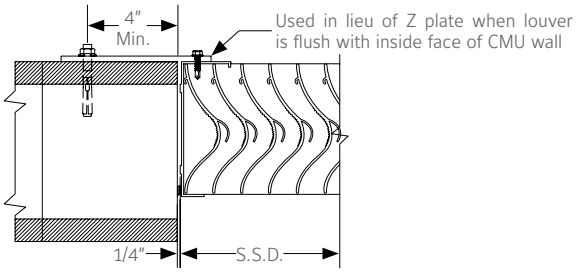

6. JAMB DETAIL: GOUT FILLED CMU (FRONT FLUSH)
N.T.S

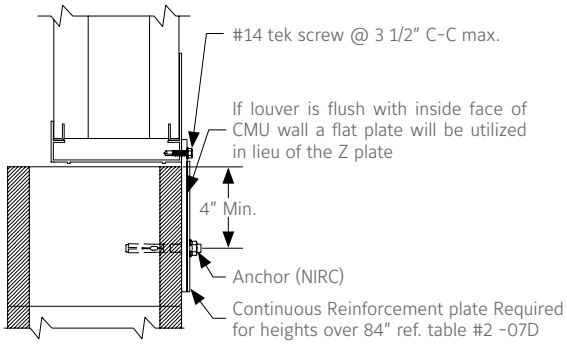

7. SILL DETAIL GROUT FILLED CMU (REAR FLUSH) (HEAD SIMILAR)
N.T.S

ALL STATED SPECIFICATIONS ARE SUBJECT TO CHANGE WITHOUT NOTICE OR OBLIGATION.
© Reliable March 2025

SUGGESTED SPECIFICATION

Furnish and install louvers as hereinafter specified where shown on plans or as described in schedules. Louvers shall possess stationary vertical blades designed to prevent the penetration of wind driven rain. Louver blades shall be contained within a 6" (152) frame. Extended sill shall be provided to capture and drain water to exterior of building. Louver components (heads, jambs, sill and blades) shall be factory assembled by the louver manufacturer. Louver sizes too large for shipping shall be built up by the contractor from factory assembled louver sections to provide overall sizes required. Louver design shall incorporate visible mullions on units larger than 48" x 96" (1219 x 2438).

MATERIAL

Frame:	.095" (2.4) wall thickness, caulking surfaces provided
Blades:	.063" (1.6) nominal wall thickness. Blades are mounted vertically.
Extended Sill:	.063" (1.6) wall thickness with upturned side panels to prevent water leakage.
Screen:	5/8" x 40" (16 x 1) aluminum bird screen in removable frame.
Finish:	Select finish specification from Reliable specification from Ruskin Finishes Brochure.

STRUCTURAL DESIGN

Integral structural supports shall be designed and furnished by the louver manufacturer to carry a wind load of not less than +160 PSF (7.66 KPa), -140 PSF (-6.70 KPa).

LINKS TO IMPORTANT DOCUMENTS

Document Title
Finishes and Color Guide
Limited Warranty Document

RELIABLE by RUSKIN

1300 Enterprise Road, P.O. Box 580, Geneva, Alabama 36340
Tel: 334-684-3621
Tel: 800-624-3914
Fax: 800-508-1469

ALL STATED SPECIFICATIONS ARE SUBJECT TO CHANGE WITHOUT NOTICE OR OBLIGATION.

© Reliable March 2025