ADVANCING VENTILATION

PREMIUM CHOICE
PCD Series

Powerful. Efficient. Smart.

DIRECT DRIVE EC/ DC CABINET FAN MODELS

FOR LIGHT COMMERCIAL AND RESIDENTIAL APPLICATIONS



CAT-PCDLC-V1
OCTOBER 2026

AUTOFLO™

AutoFlo is an innovative technology that automatically increases fan speed in response to rise in static pressure, helping to sustain the set airflow (CFM) as system resistance increases.

S&P ADVANCING VENTILATION®



PCD150, 300



PCD600



PCD1000

PCD LIGHT COMMERCIAL FANS

- Ceiling Mount Models
  - PCD150
  - PCD300
  - PCD600
  - PCD1000
  - PCD1500
- Inline Models
  - PCD300IL
  - PCD600IL
  - PCD1000IL
  - PCD1500IL



PCD300IL



PCD600IL



PCD1000IL

S&P USA VENTILATION SYSTEMS LLC

CAT-PCDLC-V1
OCTOBER 2026



CABINET CEILING MOUNT FANS:

- Performance range from approx. **100 to 1,600 CFM** for residential, multifamily and light-commercial applications.
- **AutoFlo technology** automatically increases fan-motor speed in response to rise in static pressure, helping to sustain the set airflow (CFM) as system resistance changes.
- Selectable **single-speed or two-speed operation** provides flexibility for different airflow requirements.
- In single-speed operation, airflow can be adjusted using the built-in speed-adjustment knob, allowing a wide range of airflow performance.
- In two-speed operation, the speed-adjustment knob sets the low-speed airflow for continuous ventilation.
- High-speed airflow is selected from the available preset CFM settings using the toggle switches.
- **PCD600, PCD1000, PCD1500:** Built-in humidity and motion sensors for automatic activation to high-speed operation.
- **PCD150, PCD300:** Built-in humidity sensor and motion sensing grille available as optional accessory, for automatic activation to high-speed operation.
- Adjustable time delay keeps the fan operating at high speed for the selected period before returning to low-speed operation.
- Strong, efficient centrifugal blower delivers reliable airflow against high static pressure.
- Energy-efficient EC motor with integrated overload protection for safety and longer motor life.
- Robust steel cabinet provides strength and durability for demanding applications.
- Built-in backdraft damper, removable grille, and accessible internal components simplify inspection and maintenance.
- ETL Listed to UL 507 for Electric Safety.
- **PCD150, PCD300:** Listed for HVI Airflow and Sound, AMCA Airflow
- **PCD600, PCD1000, PCD1500:** AMCA Airflow and Sound

PCD150 - 100CFM, 150CFM AND PCD300 - 100CFM TO 300CFM - AMCA FAN PERFORMANCE

AIRFLOW PERFORMANCE (CEILING EXHAUST)											
SPEED SETTING/ NOMINAL SPEED		STATIC PRESSURE IN INCHES W.G.									
		0	0.1	0.2	0.25	0.375	0.4	0.5	0.75	0.8	1
300 CFM/ 2200 RPM	CFM	331	322	310	305	301	299	292	277	274	257
	HP	0.082	0.087	0.095	0.098	0.102	0.104	0.109	0.125	0.129	0.138
200 CFM/ 2000 RPM	CFM	244	238	227	225	221	221	216	213	207	204
	HP	0.033	0.038	0.047	0.05	0.055	0.056	0.063	0.082	0.085	0.103
150 CFM/ 1800 RPM	CFM	156	154	159	159	159	159	157	154	153	146
	HP	0.014	0.02	0.028	0.032	0.037	0.039	0.044	0.062	0.064	0.082
100 CFM/ 1600 RPM	CFM	116	111	110	110	109	109	109	106	105	105
	HP	0.008	0.012	0.019	0.023	0.027	0.027	0.032	0.048	0.05	0.064

Performance certified is for models PCD150, PCD300 exhaust. Performance certified is for installation type B - Free inlet, Ducted outlet. Rating Method "E" (Direct Drive, As Run Speed).
Performance ratings include the effects of an inlet grille and backdraft damper. Speed (rpm) shown is nominal.
Performance is based on actual speed of test.

S&P USA VENTILATION SYSTEMS LLC certifies that the PCD150, PCD300 models shown herein are licensed to bear the AMCA Seal. The ratings shown are based on tests and procedures performed in accordance with AMCA Publication 211 and comply with the requirements of the AMCA Certified Ratings Program.

HVI FAN PERFORMANCE

DUCTING	DISCHARGE	SPEED	SP (IN W.G.)	RATED AIRFLOW (CFM)	RATED SOUND (SONES)	INPUT POWER (WATTS)	RATED EFFICACY (CFM/W)	MEETS EFFICIENCY REQUIREMENTS FOR CO, DC, MD, NJ , NV, NY,
6"	Horizontal	100 CFM	0.25	98				Yes
		100 CFM	0.1	100	0.5	10	10	
		150 CFM	0.25	149				
		150 CFM	0.1	150	2	16	9.3	
		200 CFM	0.25	192				
		200 CFM	0.1	200	4	30	6.6	
		300 CFM	0.25	290				
		300 CFM	0.1	300	7	68	4.4	

PERFORMANCE DATA

MODEL	SPEED SETTING	NOMINAL SPEED	PARAMETER	STATIC PRESSURE IN. WG												
				0	0.125	0.25	0.375	0.5	0.625	0.75	0.875	1	1.125	1.25	1.375	1.5
PCD600	400	1575	AIRFLOW (CFM)	520	500	485	470	460	450	440	430	415	405			
			POWER (WATTS)	57	62	72	83	95	107	119	131	144	157			
			SOUND (SONES)	4.9	4.9	5	5	5.4	5.8	6.3	6.9	7.7	8.5			
	500	1650	AIRFLOW (CFM)	600	580	560	540	525	510	490	480	470	430			
			POWER (WATTS)	77	78	87	107	116	127	140	155	169	167			
			SOUND (SONES)	5.3	6	6.7	7.2	7.2	7.3	7.5	8.1	8.6	9.1			
	600	1750	AIRFLOW (CFM)	680	655	635	615	600	580	565	550	535	445			
			POWER (WATTS)	115	118	128	138	148	157	168	180	192	172			
			SOUND (SONES)	5.9	6	6.1	6.2	6.3	6.4	6.5	6.8	7.4	8.1			
PCD1000	500	650	AIRFLOW (CFM)	585	550	510	470	425	370	330	295	255	215			
			POWER (WATTS)	34	41	47	53	59	64	71	75	78	81			
			SOUND (SONES)	4.5	4.8	5.1	5.3	5.8	6.2	6.7	7.2	7.7	8.2			
	700	680	AIRFLOW (CFM)	795	770	740	705	675	645	615	575	540	505	470		
			POWER (WATTS)	76	86	94	102	110	118	125	132	140	147	154		
			SOUND (SONES)	4.8	4.8	4.9	4.9	5	5.1	5.3	5.6	6.1	6.5	7		
	1000	900	AIRFLOW (CFM)	1175	1155	1135	1110	1090	1070	1055	1030	1020	1000	990	960	915
			POWER (WATTS)	251	264	277	290	303	316	329	342	356	370	384	392	400
			SOUND (SONES)	9.6	9.3	9	8.8	8.7	8.8	8.8	8.9	9	9.1	9.2	9.4	9.5

Performance certified is for models PCD600, PCD1000 exhaust. Performance certified is for installation type B - Free inlet, Ducted outlet. Rating Method "E" (Direct Drive, As Run Speed). Performance ratings include the effects of an inlet grille and backdraft damper. Speed (rpm) shown is nominal. Performance is based on actual speed of test. The sound ratings shown are loudness values in spherical fan sones at 5 ft (1.5m) in a spherical free field calculated per Annex B of AMCA 311. Values shown are for installation type B: free inlet spherical fan sone levels.

S&P USA VENTILATION SYSTEMS LLC certifies that the PCD600 and PCD1000 models shown herein are licensed to bear the AMCA Seal. The ratings shown are based on tests and procedures performed in accordance with AMCA Publication 211 and AMCA Publication 311 and comply with the requirements of the AMCA Certified Ratings Program.

PERFORMANCE DATA															
MODEL	SPEED SETTING	NOMINAL SPEED (RPM)	PARAMETER	STATIC PRESSURE IN.WG												
				0	0.125	0.25	0.375	0.5	0.625	0.75	0.875	1	1.125	1.25	1.375	1.5
PCD1500	700	750	AIRFLOW (CFM)	900	840	780	720	655	590	530	470	410				
			POWER (WATTS)	74	79	86	92	100	109	116	123	129				
			SOUND (SONES)	4.3	4.2	4	4.2	4.5	5	5.5	6	6.5				
	1000	900	AIRFLOW (CFM)	1340	1300	1260	1220	1180	1145	1110	1065	1025	980			
			POWER (WATTS)	237	246	254	261	270	282	295	309	321	331			
			SOUND (SONES)	7.4	7.3	7.3	7.2	7.2	7.3	7.4	7.5	7.6	7.8			
	1500	1050	AIRFLOW (CFM)	1600	1565	1525	1490	1455	1420	1390	1360	1330	1290	1255		
			POWER (WATTS)	422	432	441	451	461	474	490	506	521	535	549		
			SOUND (SONES)	9.7	9.7	9.7	9.6	9.5	9.3	9.3	9.5	9.6	9.8	10		

Performance certified is for models PCD1500 exhaust. Performance certified is for installation type B - Free inlet, Ducted outlet. Rating Method "E" (Direct Drive, As Run Speed). Performance ratings include the effects of an inlet grille and backdraft damper. Speed (rpm) shown is nominal. Performance is based on actual speed of test. The sound ratings shown are loudness values in spherical fan sones at 5 ft (1.5m) in a spherical free field

calculated per Annex B of AMCA 311. Values shown are for installation type B: free inlet spherical fan sone levels.

S&P USA VENTILATION SYSTEMS LLC certifies that the PCD1500 model shown herein is licensed to bear the AMCA Seal. The ratings shown are based on tests and procedures performed in accordance with AMCA Publication 211 and AMCA Publication 311 and comply with the requirements of the AMCA Certified Ratings Program.

DIMENSIONS - PCD150, PCD300

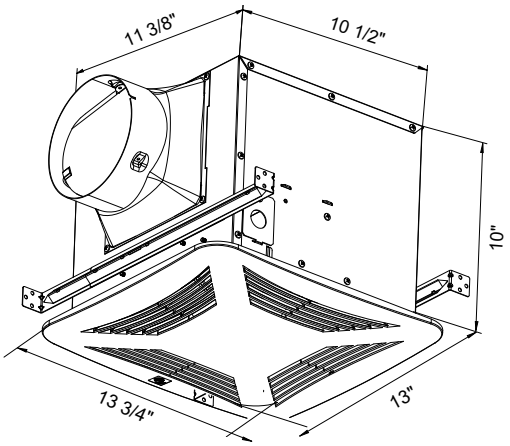



DIMENSIONS - PCD600

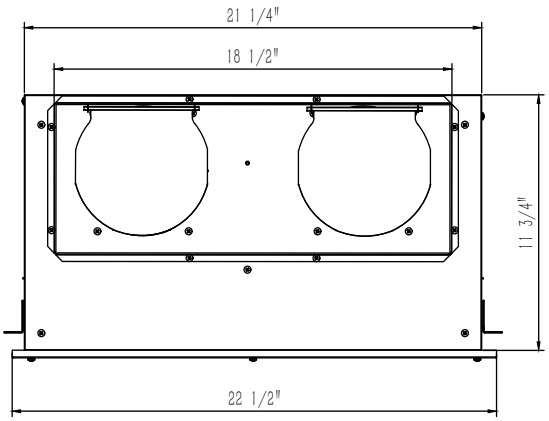

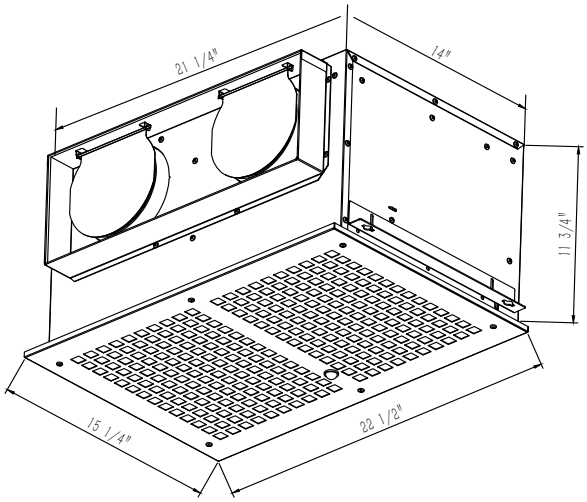

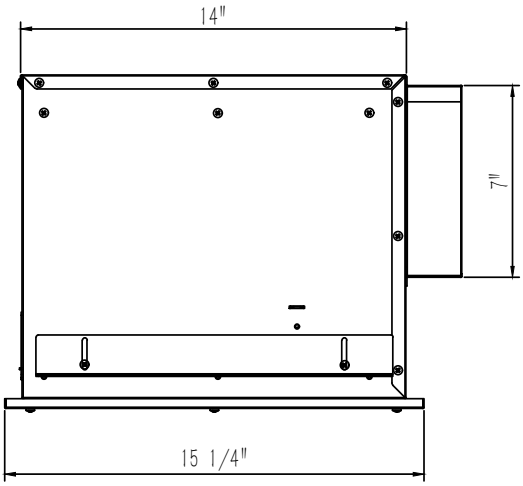



DIMENSIONS - PCD1000

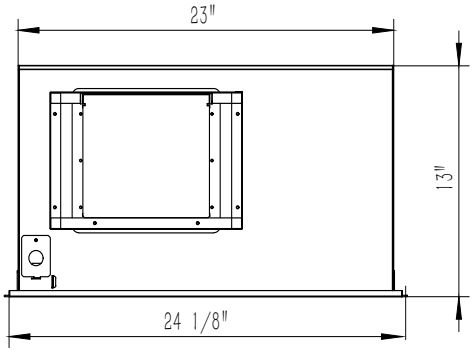

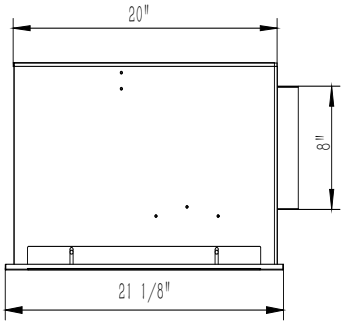

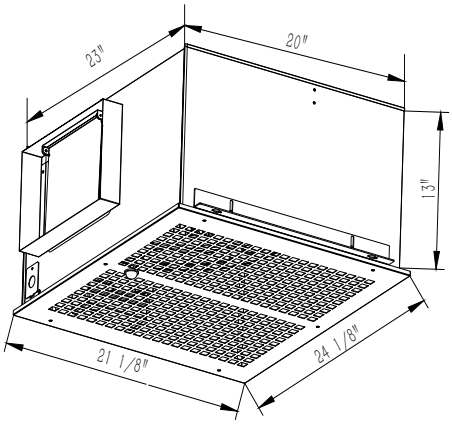

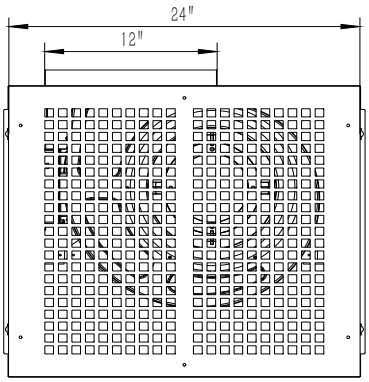

DIMENSIONS - PCD1500

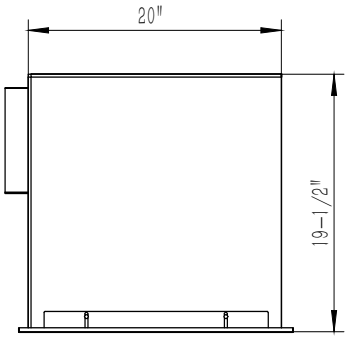

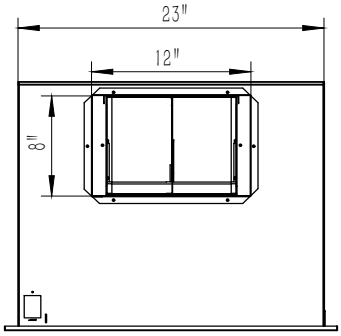

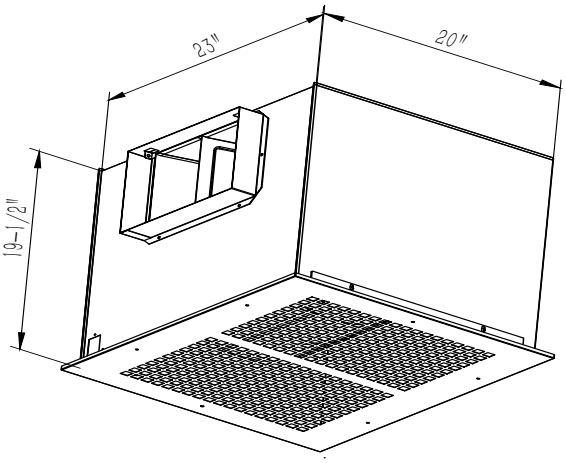

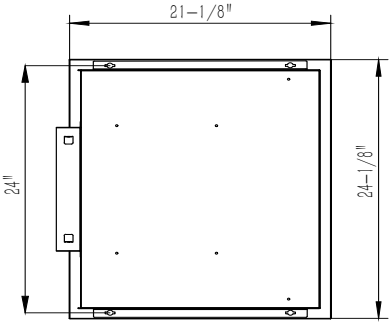

MODEL	CERTIFICATIONS	PERFORMANCE	
PCD150	HVI - AIR & SOUND, AMCA - AIR, E-STAR	LOW SPEED	Approx. min. 40CFM to 150CFM - Adjustable using knob
		HIGH SPEED	Approx. 100CFM, 150CFM - Toggle Settings
PCD300	HVI - AIR & SOUND, AMCA - AIR	LOW SPEED	Approx. min. 40CFM to 300CFM - Adjustable using knob
		HIGH SPEED	Approx. 100CFM, 150CFM, 200CFM, 300CFM - Toggle Settings
PCD600	AMCA - AIR & SOUND	LOW SPEED	Approx. min. 200CFM to 600CFM - Adjustable using knob
		HIGH SPEED	Approx. 400CFM, 500CFM, 600CFM - Toggle Settings
PCD1000	AMCA - AIR & SOUND	LOW SPEED	Approx. min. 300CFM to 1100CFM - Adjustable using knob
		HIGH SPEED	Approx. 500CFM, 700CFM, 1000CFM - Toggle Settings
PCD1500	AMCA - AIR & SOUND	LOW SPEED	Approx. min. 400CFM to 1600CFM - Adjustable using knob
		HIGH SPEED	Approx. 700CFM, 1000CFM, 1500CFM - Toggle Settings

ELECTRIC DATA				DUCT CONNECTION
MODEL	ELECTRIC CHARACTERSTICS	MAX. POWER (WATTS)	MAX. CURRENT (AMPs)	
PCD150	115V/60HZ/1Ph	61	1A	6" ROUND
PCD300	115V/60HZ/1Ph	102	1.25A	6" ROUND
PCD600	115V/60HZ/1Ph	201	2.5A	7.25" X 18.625"
PCD1000	115V/60HZ/1Ph	411	3.5A	8.25" X 12.25"
PCD1500	115V/60HZ/1Ph	550	5A	8.25" X 12.25"

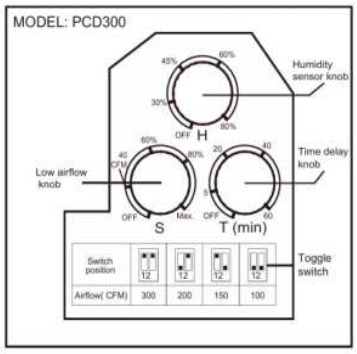

PCD300 - Built-in Control Board

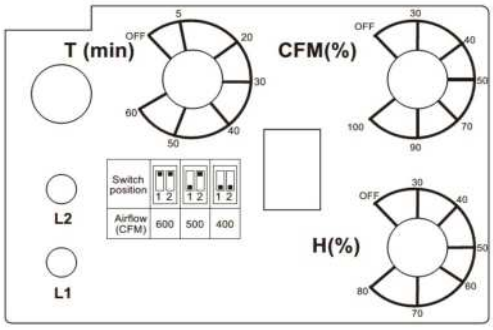

PCD600 - Built-in Control Board

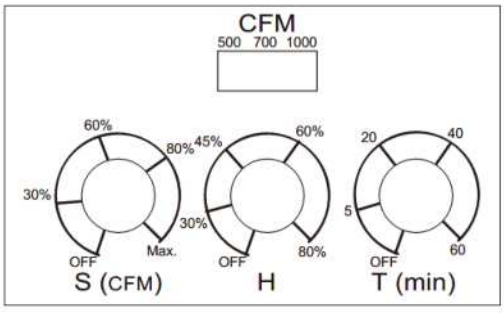

PCD1000 - Built-in Control Board

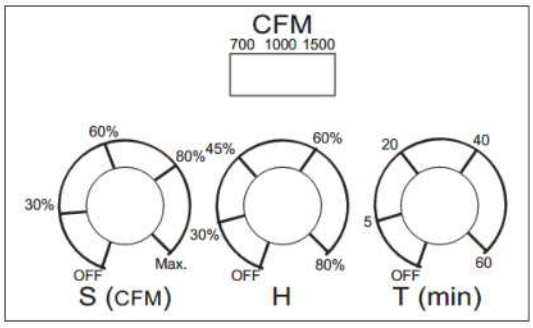

PCD1500 - Built-in Control Board

OPTIONAL ACCESSORIES	PCD150	PCD300	PCD600	PCD1000	PCD1500
LED LIGHTED GRILLE	PCLEDKP	PCLEDKP	NA	NA	NA
METAL GRILLE	PCMGP	PCMGP	BUILT-IN	BUILT-IN	BUILT-IN
MOTION SENSING GRILLE	PCMRGP	PCMRGP	BUILT-IN	BUILT-IN	BUILT-IN
MOTION SENSING LED LIGHTED GRILLE	PCDLEDMGP	PCDLEDMGP	NA	NA	NA
VIBRATION ISOLATION KIT	INCLUDED	INCLUDED	INCLUDED	INCLUDED	INCLUDED
ROOF CAP	RC-6	RC-6			
WALL CAP	641	641			
CEILING RADIATION DAMPER	PCRD	PCRD	NA	NA	NA
ASHRAE 62.2 BATH FAN VENTILATION CONTROLLER	FT622	FT622			
PROGRAMMABLE FAN TIMER 24H/ 7 DAYS	FT247	FT247	FT247	FT247	FT247
3-SWITCH	PC3S	PC3S			
RECTANGLE TO ROUND DUCT TRANSITION	NA	NA	PCD600IL-RTR10	PCD1000-RTR12	PCD1500-RTR14

SPECIAL FEATURE

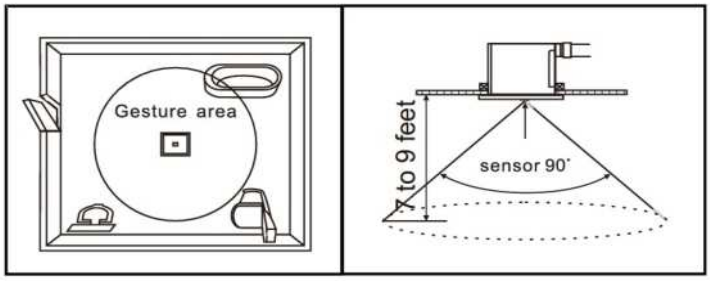

Motion sensing (Built-in PCD600, PCD1000, PCD1500):

(If enabled) Plug the motion sensing grille into the fan control module and when powered on, the fan will automatically start sensing motion.

When motion is detected, the fan speed increases to high speed. When the person exits the area, the fan remains working at high speed until the delay time has passed (user set). After the time delay, the fan speed is reduced to the set continuous ventilation rate.

Installation distance: 7 to 9 feet.
Sensing range is within the cone angle of 90°.

CABINET INLINE FANS:

- Performance range from approx. **100 to 1,500 CFM** for residential, multifamily, and light commercial exhaust and supply air applications.
- **AutoFLO™ technology** automatically increases fan-motor speed in response to rise in static pressure, helping to sustain the set airflow (cfm) as system resistance changes.
- Selectable **single-speed or two-speed operation** provides flexibility for varying ventilation requirements.
- In single-speed operation, airflow can be adjusted using the built-in speed adjustment knob, allowing a wide range of airflow performance.
- In two-speed operation, the speed adjustment knob sets the continuous low-speed airflow, while high-speed airflow is selected using the onboard toggle switches.
- All models include built-in filter slots for optional **MERV 13 filtration** in supply air applications.
- Adjustable time delay keeps the fan operating at high speed for the selected period before returning to low-speed operation.
- High-performance centrifugal blower delivers reliable airflow against high static pressure.
- Energy-efficient EC motor with built-in overload protection provides reliable operation and extended motor life.
- Heavy-duty galvanized steel cabinet provides strength and durability.
- Designed for quiet, continuous operation as an inline exhaust or supply air fan.
- Built-in backdraft damper and removable access panel provide convenient access for inspection, maintenance, and filter replacement.
- **ETL Listed to UL 507** for electrical safety.
- **PCD300IL:** Listed for AMCA & HVI for Airflow, E-Star Listed.
- **PCD600IL, PCD1000IL, PCD1500IL:** AMCA Airflow and Sound.

PCD300IL - AMCA FAN PERFORMANCE

AIRFLOW PERFORMANCE INLINE W/O FILTER											
SPEED SETTING/ NOMINAL SPEED		STATIC PRESSURE IN INCHES W.G.									
		0	0.1	0.2	0.25	0.375	0.4	0.5	0.75	0.8	1
300 CFM/ 2200 RPM	CFM	320	313	302	300	295	293	287	274	271	248
	HP	0.085	0.089	0.098	0.101	0.103	0.106	0.111	0.126	0.13	0.134
200 CFM/ 2000 RPM	CFM	231	225	217	215	213	212	209	201	200	198
	HP	0.034	0.038	0.047	0.05	0.054	0.056	0.062	0.082	0.086	0.101
150 CFM/ 1800 RPM	CFM	156	154	159	159	159	159	157	154	153	146
	HP	0.014	0.018	0.028	0.032	0.035	0.037	0.044	0.063	0.065	0.081
100 CFM/ 1600 RPM	CFM	116	111	110	110	109	109	109	106	105	105
									0.047	0.051	0.062

PCD300IL AS A SUPPLY AIR FAN

PCD300IL AIRFLOW PERFORMANCE INLINE W/ MERV 13 FILTER						
DUCT SIZE	DISCHARGE	SPEED SETTING	SP (IN W.G.)	RATED AIRFLOW (CFM)	INPUT POWER (WATTS)	MEETS EFFICIENCY REQUIREMENTS FOR CO, DC, MA, MD, NJ, NV, NY, OR, RI, VT, WA
6"	HORIZONTAL	100 CFM/ 1600 RPM	0.2	100	18	YES
			0.4	100	97	
			0.6	95	38	
			0.8	95	45	
		150 CFM/ 1800 RPM	0.2	150	30	
			0.4	150	45	
			0.6	140	53	
			0.8	135	60	
		200 CFM/ 2000 RPM	0.2	200	50	
			0.4	200	75	
			0.6	195	75	
			0.8	155	68	
		300 CFM/ 2200 RPM	0.2	270	92	
			0.4	245	97	
			0.6	205	83	
			0.8	160	75	



Performance certified is for model PCD300IL with and without MERV13 filter. Performance certified is for installation type D - Ducted inlet, Ducted outlet. Rating Method "E" (Direct Drive, As Run Speed). Performance ratings include the effects of backdraft damper. Speed (rpm) shown is nominal.
Performance is based on actual speed of test.

S&P USA VENTILATION SYSTEMS LLC certifies that the PCD300IL models shown herein are licensed to bear the AMCA Seal. The ratings shown are based on tests and procedures performed in accordance with AMCA Publication 211 and comply with the requirements of the AMCA Certified Ratings Program.

PERFORMANCE DATA														
MODEL	SPEED SETTING	NOMINAL SPEED	PARAMETER	STATIC PRESSURE IN. WG										
				0	0.125	0.25	0.375	0.5	0.625	0.75	0.875	1	1.125	1.25	1.375	1.5
PCD600IL	400	1575	AIRFLOW (CFM)	500	480	465	450	440	430	420	410	400	390			
			POWER (WATTS)	48	59	69	79	90	102	113	127	141	155			
			SOUND (SONES)	4.4	4.3	4.3	4.2	4.9	5.8	6.8	7.4	7.8	8.3			
	500	1650	AIRFLOW (CFM)	585	560	540	525	505	490	475	465	450	425			
			POWER (WATTS)	77	79	91	107	118	129	140	153	165	167			
			SOUND (SONES)	7.3	6.6	5.3	5.9	6.7	7.6	8	8.1	8.2	8.2			
	600	1750	AIRFLOW (CFM)	655	630	615	595	575	560	545	525	515	470			
			POWER (WATTS)	103	112	122	132	144	155	163	174	186	185			
			SOUND (SONES)	4.7	4.8	4.9	5	5.5	6.2	6.8	7.3	7.7	8.2			
PCD600IL-MERV13	500	650	AIRFLOW (CFM)	470	455	445	430	425	415	405	400	390				
			POWER (WATTS)	68	78	87	98	108	119	133	148	159				
			SOUND (SONES)	5.9	5.9	5.8	5.8	6.3	6.9	7.5	8.3	9.3				
	700	680	AIRFLOW (CFM)	540	520	505	490	480	470	460	440					
			POWER (WATTS)	95	105	115	126	136	148	160	170					
			SOUND (SONES)	5.2	5.7	6.2	6.7	7	7.2	7.4	7.7					
	1000	900	AIRFLOW (CFM)	605	590	570	560	545	530	515	480					
			POWER (WATTS)	132	141	151	160	169	181	193	192					
			SOUND (SONES)	5	5.2	5.4	5.7	7.1	8.9	10.7	11.1					

Performance certified is for models PCD600IL, PCD1000IL with and without MERV13 filter. Performance certified is for installation type D - Ducted inlet, Ducted outlet. Rating Method "E" (Direct Drive, As Run Speed). Performance ratings include the effects of backdraft damper. Speed (rpm) shown is nominal. Performance is based on actual speed of test. The sound ratings shown are loudness values in spherical fan sones at 5 ft (1.5m) in a spherical free field calculated per Annex B of AMCA 311. Values shown are for installation type D: ducted inlet spherical fan sone levels. Ratings do not include the effect of duct end correction.

S&P USA VENTILATION SYSTEMS LLC certifies that the PCD600IL and PCD1000IL models shown herein are licensed to bear the AMCA Seal. The ratings shown are based on tests and procedures performed in accordance with AMCA Publication 211 and AMCA Publication 311 and comply with the requirements of the AMCA Certified Ratings Program.

PERFORMANCE DATA															
MODEL	SPEED SETTING	NOMINAL SPEED	PARAMETER	STATIC PRESSURE IN. WG											
				0	0.125	0.25	0.375	0.5	0.625	0.75	0.875	1	1.125	1.25	1.375	1.5
PCD1000IL	500	1575	AIRFLOW (CFM)	570	530	490	450	400	355	290	285	250	215			
			POWER (WATTS)	38	43	50	55	64	65	74	77	81	83			
			SOUND (SONES)	3.5	3.7	3.9	4.1	4.2	4.4	4.5	4.7	5	5.2			
	700	1650	AIRFLOW (CFM)	770	740	710	685	655	625	590	555	520	485	445		
			POWER (WATTS)	85	93	101	108	114	121	128	136	143	150	153		
			SOUND (SONES)	4.3	4.5	4.6	4.8	5	5.4	5.7	5.9	6	6.1	6.2		
	1000	1750	AIRFLOW (CFM)	1135	1115	1095	1075	1060	1045	1030	1010	1000	985	970		
			POWER (WATTS)	281	292	303	314	326	339	351	365	377	389	401		
			SOUND (SONES)	6.5	6.4	6.4	6.3	6.3	6.4	6.4	6.4	6.5	6.6	6.7		
PCD1000IL-MERV13	500	650	AIRFLOW (CFM)	505	470	435	395	355	320	295	265	220				
			POWER (WATTS)	46	51	55	60	64	69	73	76	75				
			SOUND (SONES)	4.1	4.2	4.3	4.5	4.7	5	5.3	5.5	5.8				
	700	680	AIRFLOW (CFM)	695	670	640	615	590	560	530	500	470				
			POWER (WATTS)	103	109	116	122	128	133	139	146	152				
			SOUND (SONES)	4.3	4.4	4.4	4.5	4.6	4.8	5	5.2	5.4				
	1000	900	AIRFLOW (CFM)	1040	1025	1005	990	975	960	940	905	830				
			POWER (WATTS)	334	345	356	368	377	387	396	388	351				
			SOUND (SONES)	5.7	5.7	5.8	5.8	5.8	5.9	6	6	6.1				

Performance certified is for models PCD600IL, PCD1000IL with and without MERV13 filter. Performance certified is for installation type D - Ducted inlet, Ducted outlet. Rating Method "E" (Direct Drive, As Run Speed). Performance ratings include the effects of backdraft damper. Speed (rpm) shown is nominal.
Performance is based on actual speed of test. The sound ratings shown are loudness values in spherical fan sones at 5 ft (1.5m) in a spherical free field calculated per Annex B of AMCA 311. Values shown are for installation type D: ducted inlet spherical fan sone levels. Ratings do not include the effect of duct end correction.

S&P USA VENTILATION SYSTEMS LLC certifies that the PCD600IL and PCD1000IL models shown herein are licensed to bear the AMCA Seal. The ratings shown are based on tests and procedures performed in accordance with AMCA Publication 211 and AMCA Publication 311 and comply with the requirements of the AMCA Certified Ratings Program.

PERFORMANCE DATA															
MODEL	SPEED SETTING	NOMINAL SPEED (RPM)	PARAMETER	STATIC PRESSURE IN.WG												
				0	0.125	0.25	0.375	0.5	0.625	0.75	0.875	1	1.125	1.25	1.375	1.5
PCD1500IL	700	750	AIRFLOW (CFM)	875	810	755	695	619	545	485	430	380				
			POWER (WATTS)	62	68	76	84	91	102	110	117	125				
			SOUND (SONES)	3.7	3.5	3.3	3	3.7	3.9	4	4.2	4.5				
	1000	900	AIRFLOW (CFM)	1305	1260	1215	1170	1135	1100	1060	1020	955	905			
			POWER (WATTS)	198	208	218	227	239	251	262	274	291	306			
			SOUND (SONES)	7.4	7.3	7.2	7.2	7.2	7.3	7.4	7.5	7.7	7.8			
	1500	1050	AIRFLOW (CFM)	1530	1495	1460	1425	1390	1355	1330	1300	1270	1240	1200	1160	
			POWER (WATTS)	346	358	370	383	395	409	424	439	455	473	493	511	
			SOUND (SONES)	8.2	8.2	8.1	8.1	8.1	8.2	8.2	8.3	8.3	8.4	8.4	8.5	

Performance certified is for model PCD1500IL. Performance certified is for installation type D - Ducted inlet, Ducted outlet. Rating Method "E" (Direct Drive, As Run Speed). Performance ratings include the effects of backdraft damper. Speed (rpm) shown is nominal.
Performance is based on actual speed of test. The sound ratings shown are loudness values in spherical fan sones at 5 ft (1.5m) in a spherical free field calculated per Annex B of AMCA 311. Values shown are for installation type D: ducted inlet spherical fan sone levels. Ratings do not include the effect of duct end correction.

S&P USA VENTILATION SYSTEMS LLC certifies that the PCD1500IL model shown herein is licensed to bear the AMCA Seal. The ratings shown are based on tests and procedures performed in accordance with AMCA Publication 211 and AMCA Publication 311 and comply with the requirements of the AMCA Certified Ratings Program.

PERFORMANCE DATA															
MODEL	SPEED SETTING	NOMINAL SPEED (RPM)	PARAMETER	STATIC PRESSURE IN.WG												
				0	0.125	0.25	0.375	0.5	0.625	0.75	0.875	1	1.125	1.25	1.375	1.5
PCD1500IL-MERV13 FILTER	700	750	AIRFLOW (CFM)	885	825	765	690	615	555	510	455	380				
			POWER (WATTS)	74	81	89	96	104	112	118	124	130				
	1000	900	AIRFLOW (CFM)	1195	1160	1125	1090	1055	1010	970	925	885				
			POWER (WATTS)	230	240	251	262	273	285	297	308	320				
	1500	1050	AIRFLOW (CFM)	1420	1395	1370	1340	1310	1280	1250	1220	1190	1140			
			POWER (WATTS)	404	417	430	444	459	474	490	505	521	528			

Performance certified is for model PCD1500IL with MERV13 filter. Performance certified is for installation type D - Ducted inlet, Ducted outlet. Rating Method "E" (Direct Drive, As Run Speed). Performance ratings include the effects of backdraft damper. Speed (rpm) shown is nominal.
Performance is based on actual speed of test.

S&P USA VENTILATION SYSTEMS LLC certifies that the PCD1500 model shown herein is licensed to bear the AMCA Seal. The ratings shown are based on tests and procedures performed in accordance with AMCA Publication 211 and AMCA Publication 311 and comply with the requirements of the AMCA Certified Ratings Program.

DIMENSIONS - PCD300IL

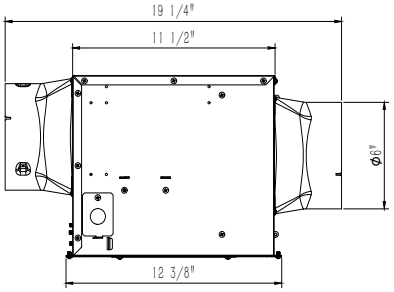

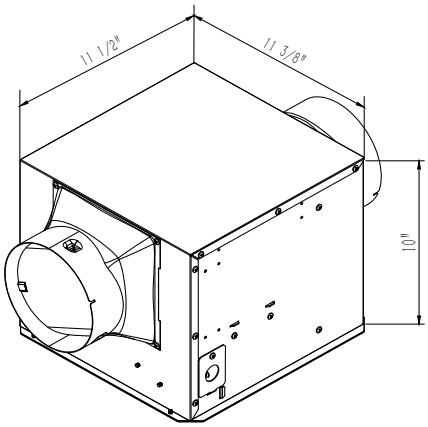



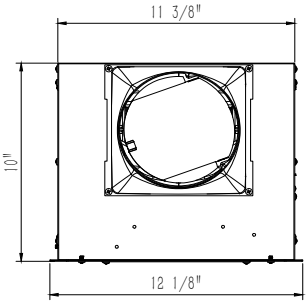

DIMENSIONS - PCD600IL

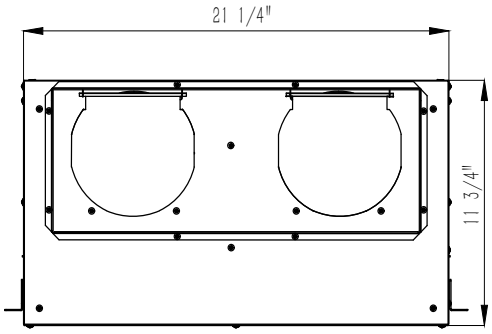

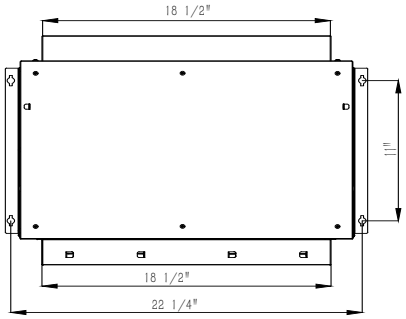

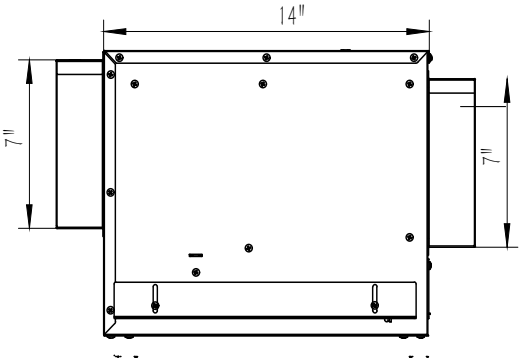

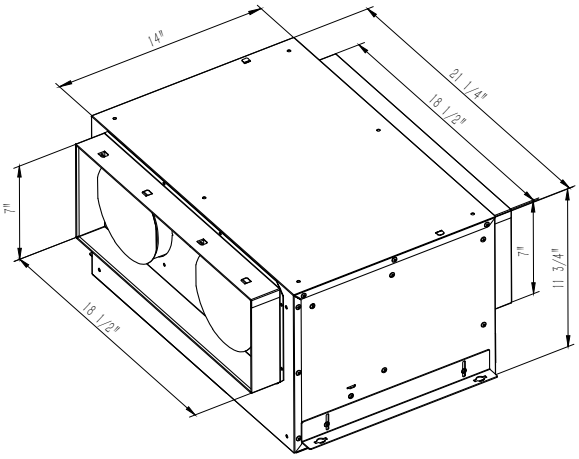

DIMENSIONS - PCD1000IL

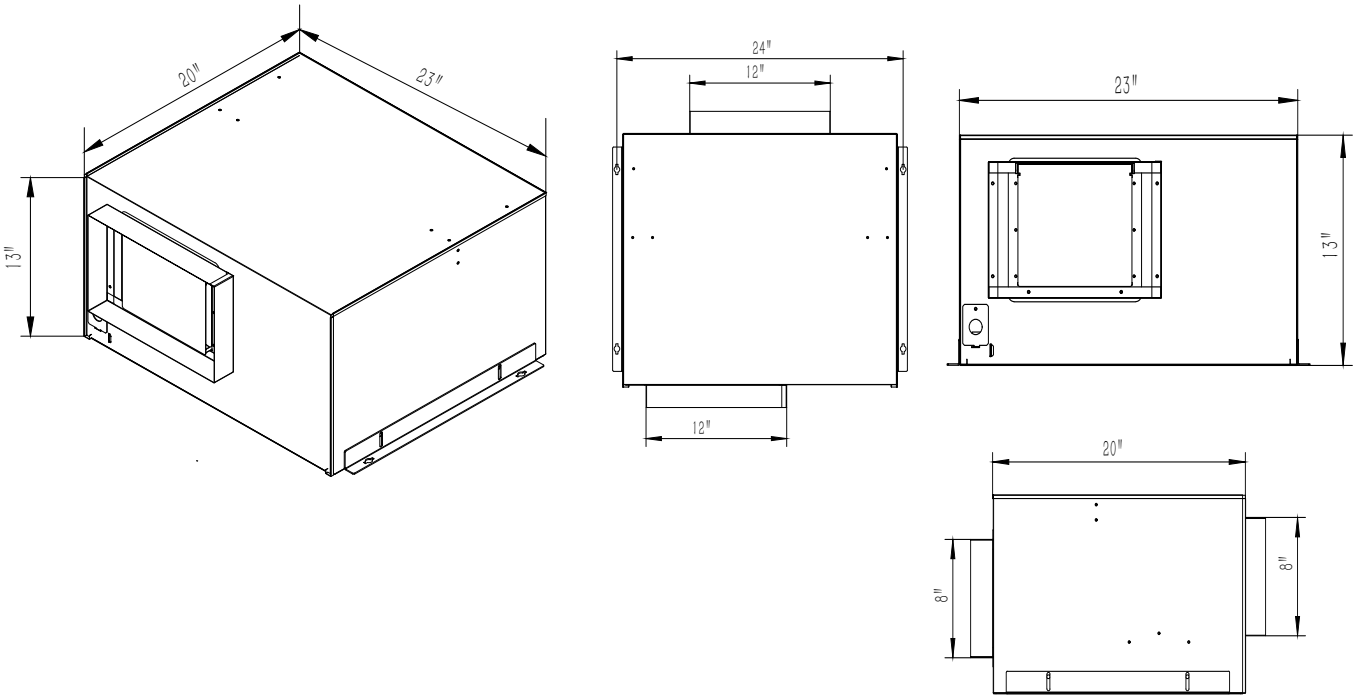

DIMENSIONS - PCD1500IL

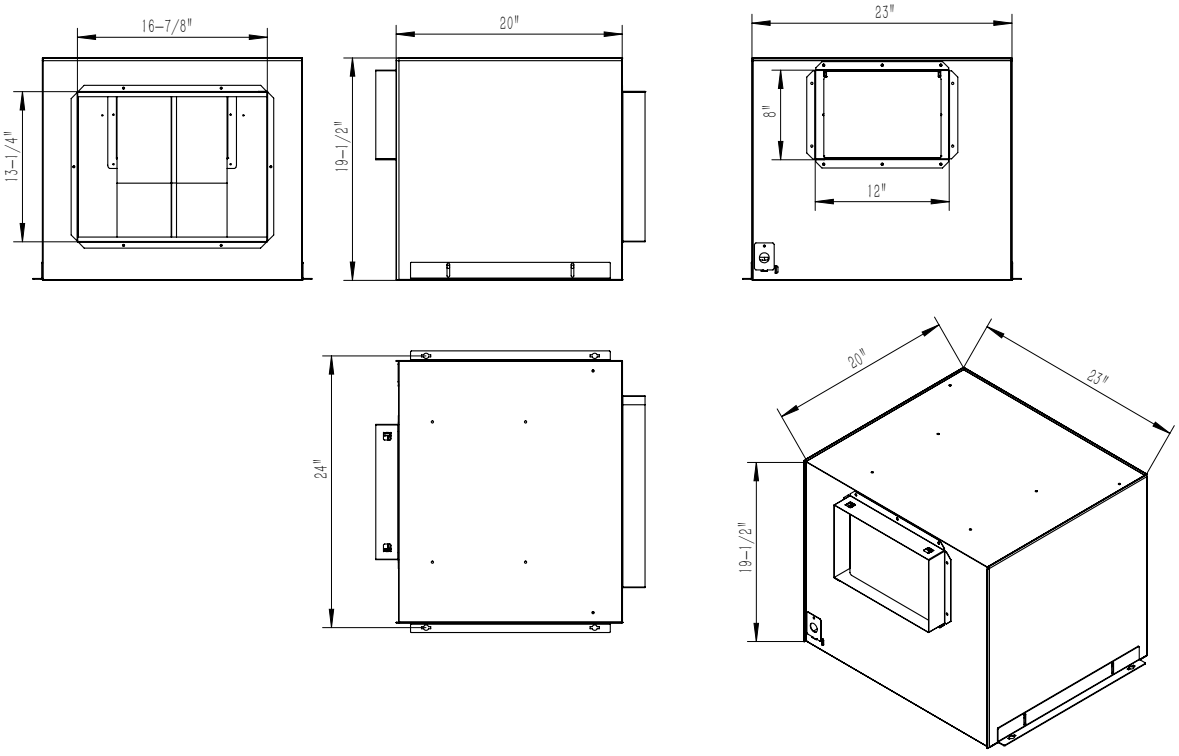

MODEL	CERTIFICATIONS	PERFORMANCE	
PCD300IL	HVI - AIR & SOUND, AMCA - AIR	LOW SPEED	Approx. min. 40CFM to 300CFM - Adjustable using knob
		HIGH SPEED	Approx. 100CFM, 150CFM, 200CFM, 300CFM - Toggle Settings
PCD600IL	AMCA - AIR & SOUND	LOW SPEED	Approx. min. 200CFM to 600CFM - Adjustable using knob
		HIGH SPEED	Approx. 400CFM, 500CFM, 600CFM - Toggle Settings
PCD1000IL	AMCA - AIR & SOUND	LOW SPEED	Approx. min. 300CFM to 1100CFM - Adjustable using knob
		HIGH SPEED	Approx. 500CFM, 700CFM, 1000CFM - Toggle Settings
PCD1500IL	AMCA - AIR & SOUND	LOW SPEED	Approx. min. 400CFM to 1500CFM - Adjustable using knob
		HIGH SPEED	Approx. 700CFM, 1000CFM, 1500CFM - Toggle Settings

MODEL	DUCT CONNECTION	FILTER PART ID	FILTER DIMENSIONS
PCD300IL	6" ROUND	PCDIL-M13F2, QTY 01	9-3/4" X 10-3/4" X 2"
PCD600IL	7.25" X 18.625"	PCDIL-M13F2, QTY 02	9-3/4" X 10-3/4" X 2"
PCD1000IL	8.25" X 12.25"	PCD1000IL-M13F, QTY 01	21-1/2" X 12-1/4" X 2"
PCD1500IL	8.25" X 12.25"	PCD1500IL-M13F, QTY 01	21-1/2" X 18-3/4" X 2"

ELECTRIC DATA			
MODEL	ELECTRIC CHARACTERSTICS	MAX. POWER (WATTS)	MAX. CURRENT (AMP)
PCD300IL	115V/60Hz/1Ph	102	1.25A
PCD600IL	115V/60Hz/1Ph	201	2.5A
PCD1000IL	115V/60Hz/1Ph	411	3.5A
PCD1500IL	115V/60Hz/1Ph	550	5A

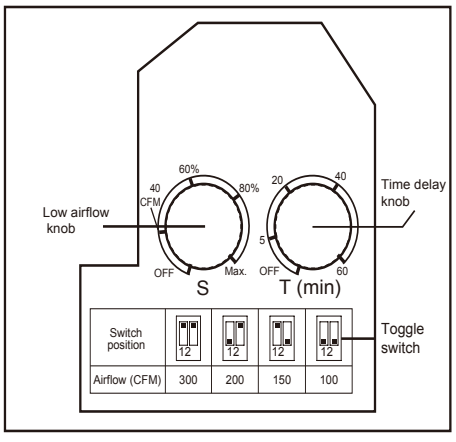

PCD300IL-Control Board (Built-in)

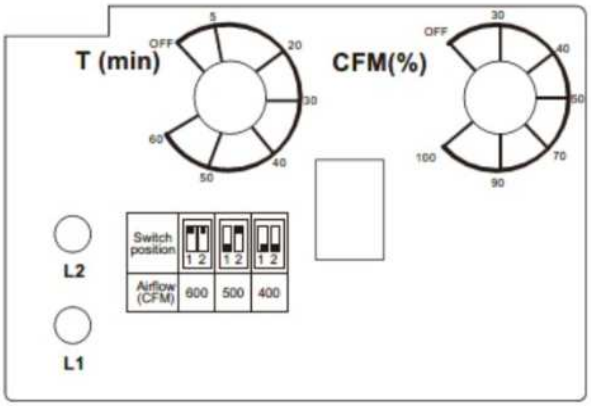

PCD600IL-Control Board (Built-in)

OPTIONAL ACCESSORIES	PCD300IL	PCD600IL	PCD1000IL	PCD1500IL
MOTORIZED DAMPER	MD6	MD10	MD12	MD14
VENTILATION CONTROLLER	ES24V-KIT	ES24V-KIT	ES24V-KIT	ES24V-KIT
PROGRAMMABLE FAN TIMER	FT247	FT247	FT247	FT247
3-SWITCH	PC3S	PC3S	PC3S	PC3S
FAN THERMOSTAT	2513.2E340			
VIBRATION ISOLATION KIT	INCLUDED	INCLUDED	INCLUDED	INCLUDED
MERV13 FILTER	PCDIL-M13F2, QTY 01	PCDIL-M13F2, QTY 02	PCD1000IL-M13F, QTY 01	PCD1500IL-M13F, QTY 01
RECTANGLE TO ROUND DUCT TRANSITION	NA	PCD600IL-RTR10	PCD1000-RTR12	PCD1500-RTR14

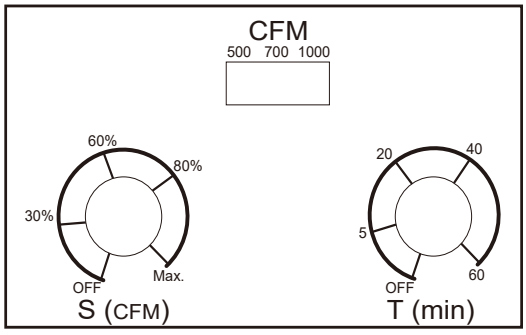

PCD1000 -
Control Board
(Built-in)

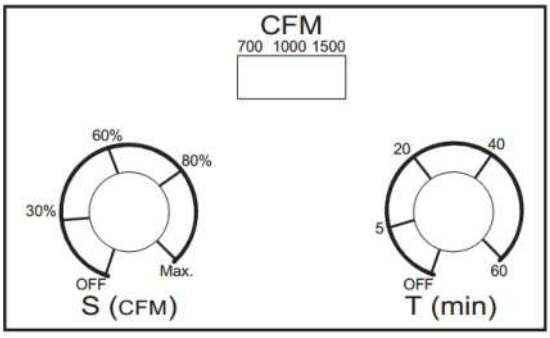

PCD1500 -
Control Board
(Built-in)

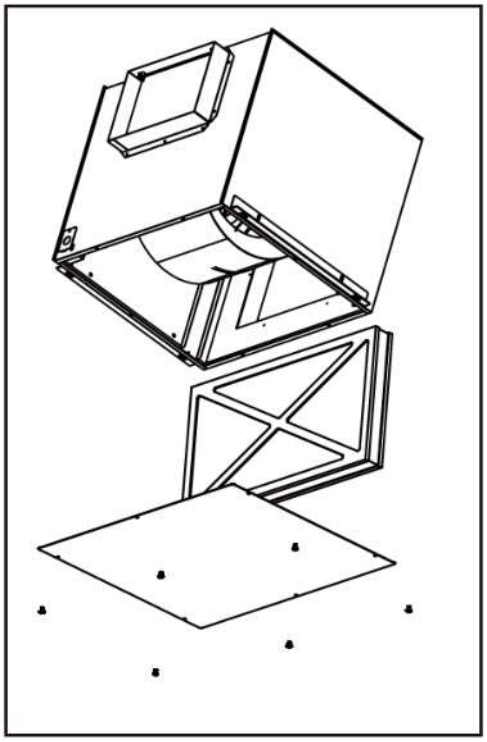

Inline Supply Air Installation with Optional Filter:
When installing the fan for inline supply air applications, an optional air filter can be added to provide filtration at the air intake.

CODE COMPLIANCE

ETL Listed for electric safety.

Designed to support compliance with ASHRAE 62.1 Ventilation for Acceptable Indoor Air Quality in commercial and institutional buildings.

High-efficiency EC motor technology supports energy-efficient building design and may contribute toward compliance with ASHRAE 90.1.

Suitable for use in applications governed by the International Mechanical Code (IMC).

Can be applied in projects pursuing compliance with California Title 24 ventilation and energy efficiency requirements, where applicable.

APPLICATIONS

The PCD Inline Series is engineered for continuous exhaust and supply air ventilation in residential, multifamily, and light commercial buildings. Its compact inline design, energy-efficient EC motor, and high static pressure performance make it ideal for concealed duct installations where quiet, reliable airflow is required.

Typical applications include:

-Multifamily Housing
-Office Buildings
-Schools & Educational Facilities
-Healthcare Facilities
-Restaurants & Cafés
-Hotels & Motels
-Fitness Centers & Locker
-Rooms Public Restrooms
-Break Rooms
-Warehouses & Storage Areas
-Utility Rooms
-Maintenance Rooms



ADVANCING VENTILATION®

S&P USA Ventilation Systems, LLC
6393 Powers Avenue
Jacksonville, FL 32217
800.961.7370
www.SolerPalau-USA.com

S&P Canada Ventilation Products, Inc
6710 Maritz Drive Unit #7
Mississauga, ON L5W 0A1 - Canada
416.744.1217
www.SolerPalauCanada.com

Soler&Palau Ventilation Group