KRUGER

KRUGER INDUCED JET FAN

IJB & IJC II Series

Compact Design High Coverage Area Low Sound

Why KRUGER?

KRUGER has been a leading innovator and manufacturer of residential, commercial and industrial fan application solutions across Asia since 1985. Today with a direct presence in over 18 regions throughout Asia; world class R&D and manufacturing facilities; KRUGER are able to offer their customers unparalleled service and support at a local level. Our customers place their trust in KRUGER.

TYPICAL TYPE OF CAR PARK

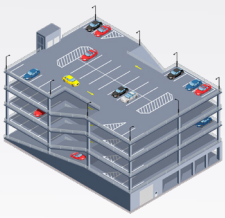

OPEN CAR PARK

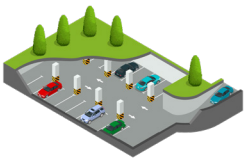

ENCLOSED CAR PARK

VENTILATION SYSTEM IN CAR PARK

Nowadays, automobiles have become an essential part of many people's daily lives. Nevertheless, hazardous gases, such as carbon monoxide (CO) emitted by automobiles inside a semi-enclosed or enclosed carpark will be hardly ventilated by natural air ventilation. In this case, mechanical ventilation with fans is required to extract these hazardous gases, provide adequate ventilation in car parks, and also aid in smoke control in the event of a fire in the carpark.

CONVENTIONAL DUCTED SYSTEM

In a conventional car park ducted ventilation system, all surrounding air is drawn in the same direction as the airflow via fans and ducting, including both the supply air and the exhaust air. In order to minimize pressure loss, air velocity needs to be as low as possible and ducts must be relatively wide. Therefore, the quantity of air in motion will always be considerably larger than the quantity of air passing through the fan.

There are some issues with conventional ventilation systems.

- There is the possibility to have areas with little or no ventilation, called "dead corners".
- Needs more space for ducts.
- Slower response than Jet fans in case of fire.

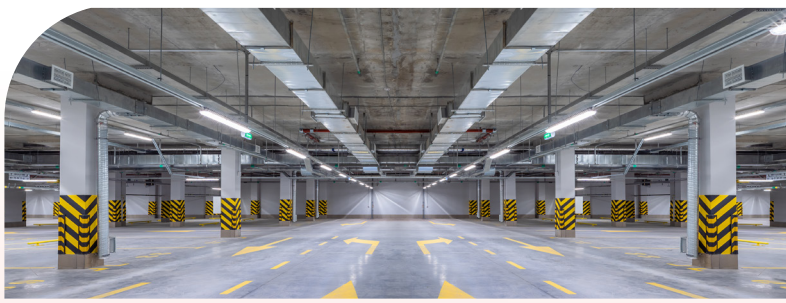

Conventional Ventilation Ducts

JET FAN SYSTEM

Ducting is not required.

Fewer conflicts in construction and a high ceiling is not required for ducting.

Lower Startup Costs.

Easy Maintenance, saves money on maintenance costs such as no need to clean ducts, damper, and so on.

Energy Saving, no energy loss due to ducts.

WHY NEED JET FAN SYSTEM IN CARPARK ?

Normal Condition The jet fan ensures sufficient ventilation to maintain the clean air and prevent the amassment of carbon monoxide during the daily use of the car park.
It operates at a low speed and controls the temperature and the carbon monoxide concentration in the car park.

Fire/Emergency Condition In the event of a fire, the smoke detection system will identify the situation and switch to the smoke extraction emergency mode to control the temperatures in a car park, create escape paths for occupants, and ensure visibility that smoothens firefighting operations.

There are 2 design conditions for fire evacuation;

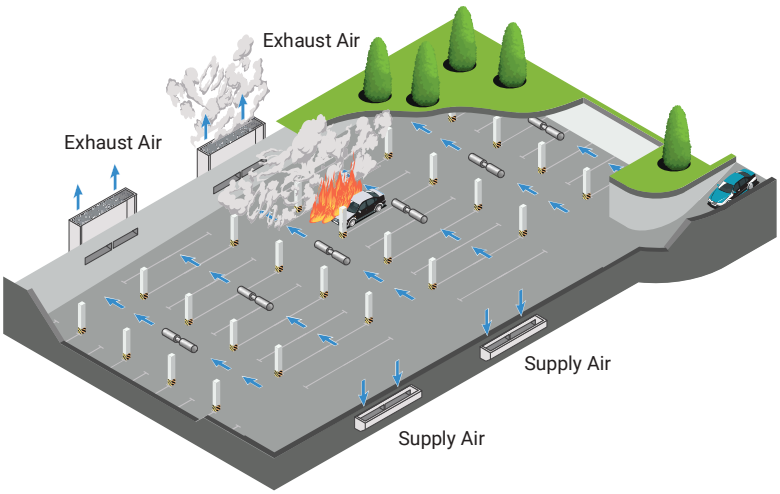

Smoke Clearance

The induced jet fan draws the air near the ground upwards with its high thrust to a higher level, effectively extracting the smoke layer and significantly reducing carpark temperature.

Smoke Control

This operation requires larger exhaust rates and stronger jet fans.

Smoke detectors locate the affected fire zone in the car park. The fan speed will increase to its maximum to limit the smoke spread directly to the exhaust unit in one direction to allow a smoke-free path for fire evacuation and extinguishing.

WHAT SOLUTION KRUGER CAN OFFER ?

Layout Design
With our experienced design team and simulation software, Kruger helps you to design the carpark jet fan system layout to ensure ideal ventilation conditions in the carpark.

Computational Fluid Dynamics (CFD) Simulation
Provide cost and space effective solution by closely simulate actual condition and requirement with CFD simulation.

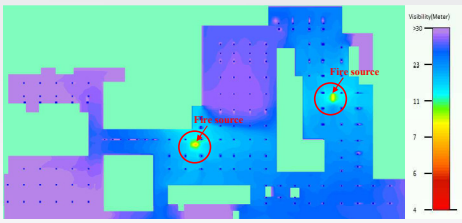

INDUCED JET FAN SOLUTIONS

The Kruger Axial (IJB Series) and Centrifugal (IJC II Series) Induced Jet Fans. It enhances air movement to minimize or eliminate areas of stagnant air for required areas such as basement car parking spaces, driving lanes, etc. IJC II Series provides inclination air movement for car parks with low ceiling designs and helps avoid beams and obstructions,

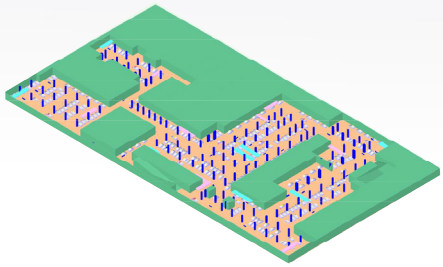

Both of them are ready to plunge into smoke extraction emergency mode in fire evacuation scenarios.

CAR PARK SYSTEM

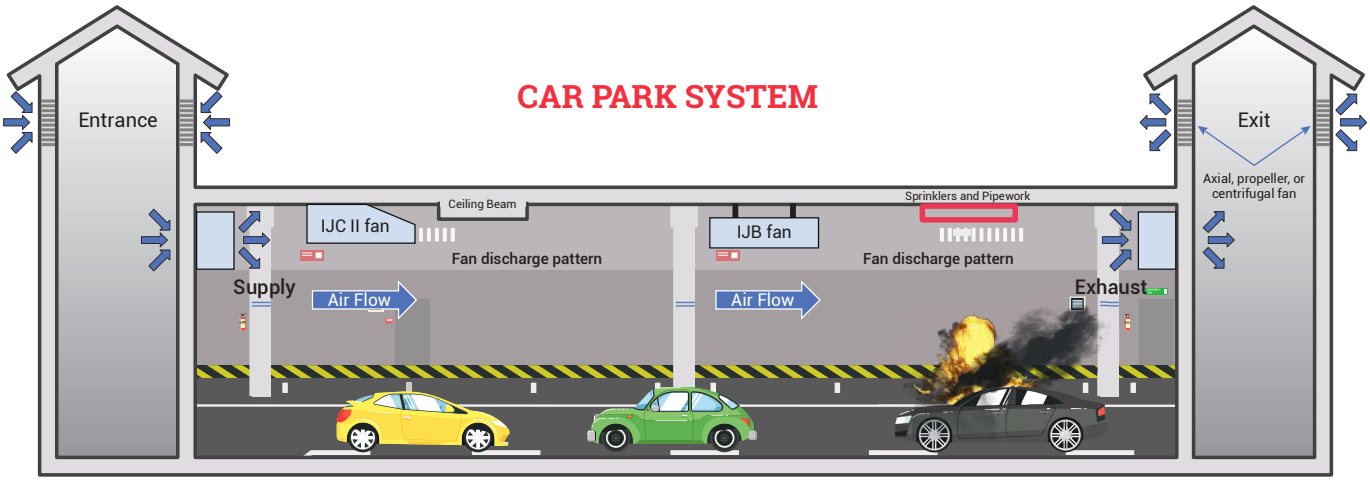

KRUGER INDUCED JET FAN

Application

Car Park — Underground Passage Way — Smoke Extraction

LARGE VOLUME FLOW RATE ➠ HIGH THRUST FORCE ➠ LONG THROW DISTANCE ➠ LOW SOUND LEVEL

Induced IJB Axial Jet Fan

PRODUCT FEATURES

- Standard fan diameter available in 315 to 450mm, larger fan diameter design is available upon request.
- High System Performance: Airflow up to 3.63 m³/s
- High thrust force up to 100N.
- Compact design, less clearance required suitable for car park ventilation and smoke extraction.
- Fan directly mounted on the ceiling, lower installation and running costs.
- Low noise operation, each model is equipped with a 2D silencer as standard.
- 60Hz motor is available upon request.

PRODUCT SPECIFICATIONS

① Motors

Totally enclosed Class 'F'/ 'H' motors with a min. IP54 protection are fitted as standard. Motors up to 2.2kW are supplied with DOL starting, motors 3.0kW and above are with star/delta starting.

② Construction

Double flanged casing is produced in mild steel or galvanized steel. Impeller is made of Aluminum.

③ Flow Direction

Uni-directional, reversible fan is available upon request.

④ Silencer

- Outer casing made of galvanized steel sheet and inner casing made of galvanized steel perforated sheet.
- Inlet bell-mouth provided for smooth airflow.
- Glass fiber as absorption filler material to achieve excellent acoustic performance.
- Each model is available with 2D silencer as standard. Non- standard length to meet special performance requirement can be supplied upon request.

⑤ Coating Finish

Zinc rich primer and polyester powder coating or galvanized finishing are available for all mild steel parts.

Induced IJC II Centrifugal Jet Fan

PRODUCT FEATURES

- High System Performance: Airflow up to 3.08 m³/s.
- High Thrust Force: between 50-100N.
- Compact design, less clearance required suitable for car park ventilation and smoke extraction.
- Easy maintenance, Lower installation and running costs.
- 60 Hz motor is available upon request.

PRODUCT SPECIFICATIONS

Motors

- General ventilation: All motors are IP55, Class F insulation, Totally Enclosed Non-Ventilated (TENV).
- Smoke exhaust system: All motors are IP55, Class H insulation, Totally Enclosed Non-Ventilated (TENV) High Temperature Rated Motor (200°C, 250°C, 300°C or 400°C - 2 hrs, TUV SUD PSB certified).

Fan

- Galvanized sheet steel casing supplied with two mounting brackets.
- Centrifugal backward curved wheel in mild steel with polyester painting.
- Supplied with inlet guard.
- Tested in accordance with BS EN 12101- 3:2015: Ff250, F300, Ff300 &F400 certified by TUV SUD PSB.

Operating Temperature

- General ventilation: -20°C to +55°C.
- Smoke exhaust system: 200°C, 250°C, 300°C or 400C for 2 hours.

Technical Data IJB Series

Model		Maximum Flow Rate (m3/h)	Outlet Velocity (m/s) *	Thrust Force (N)	Motor Input Power (kW)	Installed Power (kW)	Speed (RPM)	Hz	Voltage (V)	Phase	Lw(A) dB(A)**	Lp(A) dB(A)***
IJB 315	H	4579	17	25	0.75	0.55	2750	50	400	3	84	63
	L	2470	9	7	0.18	0.37	1480				68	48
IJB 355	H	6905	20	45	1.48	1.50	2900	50	400	3	82	62
	L	3629	10	12	0.27	0.37	1470				69	49
IJB 400	H	9702	22	69	2.24	2.20	2950	50	400	3	89	68
	L	4914	11	18	0.35	0.37	1450				68	48
IJB 450	H	13007	23	98	3.41	3.00	2940	50	400	3	84	64
	L	6887	12	28	0.51	0.55	1460				72	52

*** The AMCA Certified Ratings Seal applies to thrust at free delivery only. Speed (RPM) shown is nominal. Performance is based on actual speed of test. Performance ratings include the effects of appurtenances on the inlet and outlet.**

**** Values shown are for inlet Lwi(A) sound power levels for installation type A: free inlet, free outlet with partition. The A-weighted sound ratings shown have been calculated per AMCA International Standard 301.**

*** Inlet Lp(A) sound pressure levels at 3m are measured at free discharge in spherical free field condition, inlet Lp(A) (dB(A)) levels are not licensed by AMCA International.

- Power ratings shown are for Kruger motors.
- Performance ratings include the effects of 2D inlet silencer and 2D outlet silencer.
- Performance certified is for installation type A - Free inlet, Free outlet with partition.

Velocity Profile

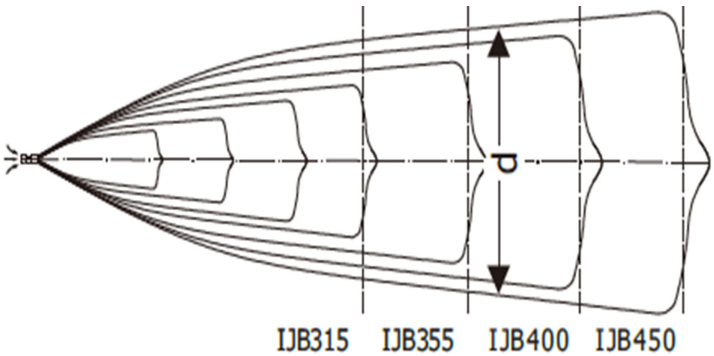

Distance from Fan Outlet (m)			2	4	6	8	10	12	14	16	18	20	22	24
IJB 315	H	CV	15.03	10.30	8.09	5.23	3.89	3.03	2.47	2.02	1.73	1.50	1.34	1.25
		FW	0.10	0.16	0.20	0.38	0.50	0.72	1.17	1.60	1.82	2.40	2.78	2.80
	L	CV	5.55	4.35	2.84	2.13	1.65	1.31	1.12	0.95	0.85	0.73	0.68	0.60
		FW	0.18	0.31	0.46	0.70	1.20	1.30	1.60	1.90	2.20	2.80	3.00	4.20
IJB 355	H	CV	12.21	9.59	6.20	4.66	3.59	2.89	2.47	2.08	1.80	1.59	1.46	1.35
		FW	0.18	0.22	0.40	0.58	0.90	1.40	1.80	2.10	2.50	2.60	3.20	3.30
	L	CV	6.42	5.04	3.26	2.46	1.92	1.54	1.27	1.10	0.97	0.84	0.78	0.68
		FW	0.20	0.30	0.48	0.70	1.00	1.30	1.60	1.80	2.20	3.20	3.70	3.70
IJB 400	H	CV	15.01	13.14	10.18	7.55	5.92	4.83	4.05	3.43	2.96	2.64	2.34	2.10
		FW	0.40	0.40	0.40	0.60	0.80	1.00	1.30	1.50	1.80	2.20	2.70	3.20
	L	CV	7.59	6.62	5.09	3.86	2.49	2.07	1.77	1.55	1.39	1.23	1.13	1.03
		FW	0.40	0.40	0.40	0.60	0.80	1.00	1.20	1.40	1.60	2.00	2.60	3.10
IJB 450	H	CV	21.50	15.83	13.59	10.60	8.03	6.17	5.04	4.19	3.50	3.13	2.81	2.47
		FW	0.20	0.30	0.30	0.40	0.50	0.80	1.00	1.20	1.60	1.80	2.00	2.50
	L	CV	11.40	8.43	7.49	5.83	4.40	3.50	2.84	2.35	1.92	1.72	1.54	1.35
		FW	0.20	0.30	0.30	0.40	0.40	0.70	0.90	1.20	1.60	1.90	2.10	2.40

Distance from Fan Outlet (m)			26	28	30	32	34	36	38	40	42	44	46	48
IJB 315	H	CV	1.11	1.03	0.95	0.92	0.86	0.78	0.73	0.67	-	-	-	-
		FW	3.10	3.20	3.70	3.80	5.10	6.30	6.30	6.30	-	-	-	-
	L	CV	-	-	-	-	-	-	-	-	-	-	-	-
		FW	-	-	-	-	-	-	-	-	-	-	-	-
IJB 355	H	CV	1.19	1.10	1.01	0.91	0.87	0.80	0.73	0.71	0.66	0.63	-	-
		FW	3.80	4.20	5.20	7.10	7.10	7.10	7.10	7.10	7.10	7.10	-	-
	L	CV	-	-	-	-	-	-	-	-	-	-	-	-
		FW	-	-	-	-	-	-	-	-	-	-	-	-
IJB 400	H	CV	1.90	1.76	1.62	1.50	1.42	1.36	1.27	1.24	1.18	1.11	1.03	0.95
		FW	3.40	3.90	4.40	5.20	5.20	5.90	6.60	7.00	8.00	8.00	8.00	8.00
	L	CV	1.03	0.94	0.87	0.79	0.76	0.74	0.69	0.64	0.61	-	-	-
		FW	4.10	4.90	5.40	6.60	6.90	8.00	8.00	8.00	8.00	-	-	-
IJB 450	H	CV	2.29	2.02	1.77	1.63	1.52	1.43	1.34	1.26	1.23	1.17	1.16	1.11
		FW	3.00	3.20	4.80	5.40	5.80	6.40	7.20	9.00	9.00	9.00	9.00	9.00
	L	CV	1.25	1.12	1.03	0.88	0.85	0.77	0.77	0.70	0.70	0.73	0.68	0.62
		FW	2.60	2.80	3.30	4.70	5.40	6.00	6.40	7.50	7.50	9.00	9.00	9.00

Note: H - High Speed L - Low Speed CV - Center Line Velocity (m/s) FW - Flow Width (m)

Dimension

IJB FAN

IJB

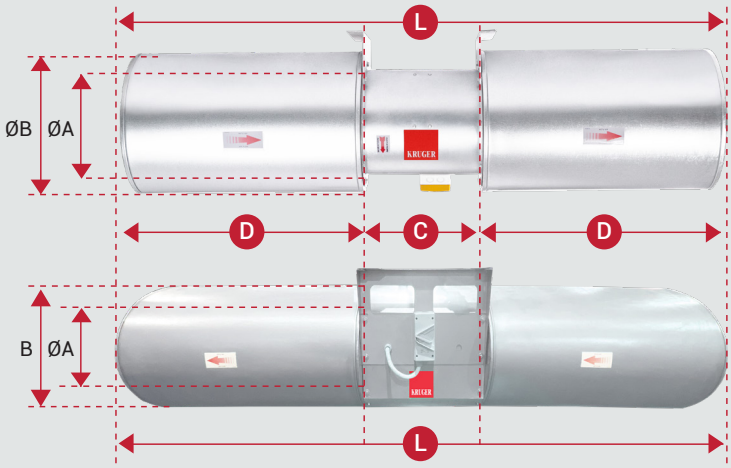

IJB-O

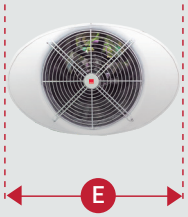

Dimension						
Model	ØA	ØB	C	D	L (2D, Max)	Weight (kg)
IJB 315	315	415	355	630	1635	64
IJB 355	355	455	400	710	1840	83
IJB 400	400	500	450	800	2060	105
IJB 450	450	550	500	900	2310	136

Dimension							
Model	ØA	B	C	D	E	L (2D, Max)	Weight (kg)
IJB 315-O	315	385	355	630	578	1635	69
IJB 355-O	355	425	400	710	638	1840	86
IJB 400-O	400	470	450	800	705	2060	110
IJB 450-O	450	520	500	900	780	2310	147

Mounting

Mounting Feet - IJB

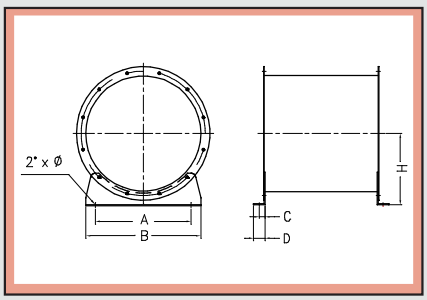

Hanger - IJB

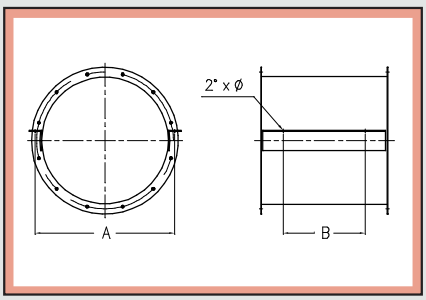

Dimension									
Model	Mounting Feet						Hanger		
	A	B	C	D	H	Wt/set(kg)	A	B	Wt/set(kg)
IJB 315	265	315	25	50	264	2.0	355	263	2.2
IJB 355	290	355	25	50	260	2.0	395	263	2.2
IJB 400	304	400	25	50	265	2.5	440	338	2.2
IJB 450	375	450	25	50	288	3.0	490	338	2.4

Mounting Feet & Hanger - IJB-O

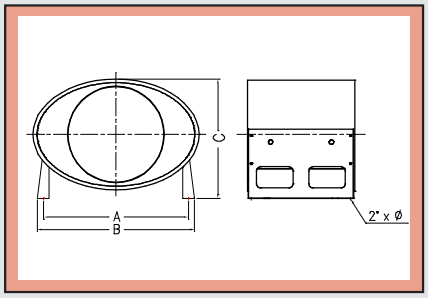

Dimension				
Model	Mounting Feet & Hanger			
	A	B	C	Wt/set(kg)
IJB 315-O	517	572	405	1.7
IJB 355-O	565	620	445	2.2
IJB 400-O	619	674	490	2.8
IJB 450-O	679	734	540	3.6

Technical Data IJC II Series

Model		Maximum Flow Rate (m3/h)*	Outlet Velocity (m/s)	Thrust Force (N)	Current at free discharge (A)	Motor Input Power (kW)	Installed Power (kW)	Speed (RPM)	Hz	Voltage (V)	Phase	Lw(A) dB(A)**	Lp(A) dB(A)***
IJC II 50	H	7312	23	53	3.31	1.86	1.50	1400	50	400	3	88	67
	L	4241	13	18	1.18	0.36	0.37	725				71	50
IJC II 75	H	9608	26	80	4.82	2.79	2.30	1450	50	400	3	92	71
	L	4842	13	20	1.34	0.42	0.37	720				72	50
IJC II 100	H	11171	28	101	5.86	3.51	3.00	1440	50	400	3	94	73
	L	5756	14	27	1.96	0.59	0.55	720				76	55

*** The AMCA Certified Ratings Seal applies to thrust at free delivery only. Speed (RPM) shown is nominal. Performance is based on actual speed of test. Performance ratings include the effects of appurtenances on the inlet and outlet.**

**** Values shown are for inlet Lwi(A) sound power levels for installation type A: free inlet, free outlet with partition. The A-weighted sound ratings shown have been calculated per AMCA International Standard 301.**

*** Inlet Lp(A) sound pressure levels at 3m are measured at free discharge in spherical free field condition, inlet Lp(A) (dB(A)) levels are not licensed by AMCA International.

- Power ratings shown are for Kruger motors.
- Performance certified is for installation type A - Free inlet, Free outlet with partition.

Velocity Profile

High Speed (m/s)

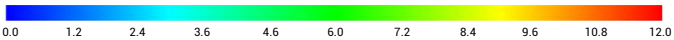

Low Speed (m/s)

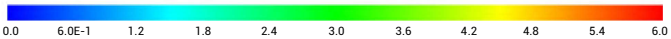

Distance from Fan Outlet (m)			3	6	9	12	15	18	21	24	27	30	33	36	39
IJC II 50	H	CV	13.84	11.02	7.57	5.50	4.17	3.44	2.99	2.50	2.21	1.99	1.86	1.67	1.47
		FW	0.18	0.30	0.42	0.80	1.60	1.80	2.20	2.80	3.00	3.50	4.00	5.00	5.70
	L	CV	7.97	6.49	4.36	3.24	2.57	2.11	1.79	1.55	1.35	1.19	1.04	0.96	0.87
		FW	0.16	0.26	1.00	1.20	1.40	1.70	1.90	2.20	2.60	3.40	4.80	5.20	5.40
IJC II 75	H	CV	15.54	12.36	8.44	6.32	5.11	4.15	3.53	2.99	2.72	2.35	2.13	1.95	1.75
		FW	0.14	0.40	0.90	1.20	1.30	1.50	1.60	2.40	2.50	2.80	3.30	3.90	5.20
	L	CV	7.76	5.93	4.18	3.15	2.54	2.10	1.76	1.54	1.43	1.25	1.10	1.03	0.94
		FW	0.18	0.40	0.90	1.30	1.40	2.00	2.20	2.70	2.80	3.20	3.40	4.40	5.20
IJC II 100	H	CV	16.92	13.69	9.05	6.68	5.32	4.34	3.62	3.12	2.77	2.42	2.22	2.04	1.89
		FW	0.16	0.20	0.70	1.20	1.70	2.20	2.60	3.10	3.90	4.40	4.80	5.50	6.60
	L	CV	8.72	7.20	4.94	3.45	2.78	2.39	2.06	1.85	1.58	1.42	1.31	1.16	1.02
		FW	0.16	0.18	0.60	1.20	1.40	1.90	2.60	2.70	2.80	3.20	3.80	4.40	6.80
Distance from Fan Outlet (m)			42	45	48	51	54	57	60	63	66	69	72	75	78
IJC II 50	H	CV	1.35	1.17	1.12	1.04	0.96	0.90	0.83	0.79	0.71	-	-	-	-
		FW	7.10	7.80	10.00	10.00	10.00	10.00	10.00	10.00	10.00	-	-	-	-
	L	CV	0.81	0.75	0.72	0.69	0.61	0.58	0.56	0.51	0.46	-	-	-	-
		FW	5.80	6.30	6.80	7.00	8.20	8.40	10.00	10.00	10.00	-	-	-	-
IJC II 75	H	CV	1.58	1.41	1.31	1.23	1.23	1.14	1.08	0.99	0.94	0.90	0.86	-	-
		FW	6.00	7.10	8.00	8.70	11.40	11.40	11.40	11.40	11.40	11.40	11.40	-	-
	L	CV	0.82	0.75	0.71	0.66	0.57	0.55	0.50	0.43	0.35	0.27	0.20	-	-
		FW	5.40	8.00	9.20	11.40	11.40	11.40	11.40	11.40	11.40	11.40	11.40	-	-
IJC II 100	H	CV	1.77	1.64	1.52	1.46	1.35	1.25	1.21	1.12	1.05	1.01	0.97	0.90	0.83
		FW	7.90	8.00	8.80	9.30	11.40	11.40	11.40	11.40	11.40	11.40	11.40	11.40	11.40
	L	CV	0.88	0.81	0.78	0.68	0.56	0.53	0.52	0.50	0.48	0.46	0.42	0.35	0.30
		FW	7.10	7.90	9.40	10.70	11.40	11.40	11.40	11.40	11.40	11.40	11.40	11.40	11.40

Note: H - High Speed L - Low Speed CV - Center Line Velocity (m/s) FW - Flow Width (m)

Dimension

Model	IJC II 50	IJC II 75	IJC II 100
A	898	1020	1100
B	858	980	1060
C	808	930	1010
D	120	120	120
H	310	355	355
L	1340	1600	1670
Weight (kg)	89	118	125

Control and Accessories

Variable Frequency Drive

- High Performance advanced vector control technology drives for AC induction motor and Permanent magnet synchronous motor.
- Energy saving by adjusting fan speed to meet load and built-in PID control function for Demand Controlled Ventilation.
- Easy & Reliable control by Analog signal 0-10V, 4-20mA, RS485 Modbus RTU and BACNet MS/TP communication (Option Card).
- Safe operation by using Safe Torque OFF Function (STO), switches off the drive output by turning off the drive signals to prevent unexpected startups of the motor when the main power supply of the drive is not switched off.
- Fire Overdrive function allowing to run until destruction ignoring faults and warnings.
- IP54 protection rating, independent duct design (IP20 also available).

Sensor and Detector

- Carbon Monoxide (CO) Sensor and Nitrogen Dioxide (NO_2) Sensor with electrochemical probe. Low sensitivity to interfering gases.
- Temperature Sensor and Low-Profile Plug-In Smoke Detector is available upon request.

Aided carpark ventilation product - Main Fans, Other jet fan series

Main Supply / Exhuast Fans

Axial Fans
TDA, TDC, MXC

Centrifugal Fans
BSB, FSA, BDB

Other Jet Fan Series

IJM

IJC

Certification

Kruger Ventilation Industries Asia Co.,Ltd certifies that the IJB and IJC II series shown herein are licensed to bear the AMCA seal. The ratings shown are based on tests and procedures performed in accordance with AMCA Publication 211 and AMCA Publication 311 and comply with the requirements of the AMCA Certified Ratings Program.

Class	Temperature (°C)	Minimum Fuctioning Period (minutes)
Ff250	250	120
F300	300	60
Ff300	300	120
F400	400	120

Certified by **TÜV SÜD** which is a leading international service organization focusing on consulting, testing, certification and training. IJB series was tested in accordance with EN 12101-3:2015.

KRUGER Ventilation Group

THAILAND (Regional HQ)
KRUGER VENTILATION INDUSTRIES ASIA CO. LTD.
30/159 Moo 1, Sinsakorn Industrial Estate,
Chetsadawithi Road, Khok Kham Mueng, Samuthsakorn 74000, Thailand
Tel: +662 1054298 Fax: +662 0248256-9
Website: www.krugerfan.com

THAILAND
KRUGER VENTILATION IND. (THAILAND) CO. LTD.
30/105 Moo 1, Sinsakorn Industrial Estate,
Chetsadawithi Road, Khok Kham Mueng, Samuthsakorn 74000, Thailand
Tel: +662 1050399 Fax: +662 1050370-2
Email: mktg@kruger.co.th

INDIA
KRUGER VENTILATION INDUSTRIES (INDIA) PVT. LTD.
Kruger Centre, Mumbai-Nasik Highway,
Kalamgaon, Shahapur, Thane 421601, Maharashtra, India
Tel: +91 9960558899/9975577211
Email: sales@krugerindia.com

INDIA (NORTH)
KRUGER VENTILATION INDUSTRIES (NORTH INDIA) PVT LTD
Village Rohad, Tehsil Bahadurgarh, Jhajjar, Haryana-124507
Tel. +91-9958991652/9958991660/8586966303
Fax +91-1276-278096
Email: sales.kni@krugerindia.com , service@krugerindia.com

KOREA
NEOMATE CO. LTD.
2-1010, Ace High Tech City B/D, 775 Gyeongin-ro,
Yeongdeungpo-gu, Seoul, Korea. Postal Code 07299
Tel: +82-2-2679-2052 Fax: +82-2-2679-2174
Email: y7890@neomate.co.kr

MYANMAR
KRUGER VENTILATION (MYANMAR) CO. LTD.
Room No. F21, Thiri Yadanar Whole Sale Market, (Htawunbe)
Toe Chae Ward, North Okkalapa Township, Yangon.
Tel: +959 763141081/2/3
Email: htoon@krugermm.com

SINGAPORE
KRUGER ENGINEERING PTE. LTD.
2 Venture Drive #20-23, Vision Exchange,
Singapore 608526.
Tel: +65 68631191 Fax: +65 68631151
Email: mktg@krugerfan.com

AUSTRALIA
S&P KRUGER AUSTRALIA PTY. LTD.
2 Cunningham St, Moorebank N.S.W. 2170
Tel: +61 2-98227747
Fax: +61 2-98227757
Email: info@sandpkruger.com.au

INDONESIA
P.T. KRUGER VENTILATION INDONESIA.
JL. Teuku Umar No.20,
Karawaci - Tangerang 15115, Indonesia
Tel: +62 21-5512288/5513557 Fax: +62 21-5513502
Email: mktg@krugerindo.co.id

CHINA (GUANGZHOU)
GUANGZHOU KRUGER VENTILATION CO. LTD.
No. 9 Huahui Road, Huashan, Huadu,
Guangzhou, P.R. China 510880
Tel: +86 20-66356635 Fax: +86 20-86786001/86786500
Email: gzkruger@krugergz.com

CHINA (TIANJIN)
TIANJIN KRUGER VENTILATION CO. LTD.
Jingjin Science and Technology Park
Wuqing District, Tianjin, China
Tel: +86 22-22143480/3481 Fax: +86 22-22143482
Email: krugertj@krugertj.com

CHINA (SHANGHAI)
Shanghai Kruger Ventilation Co.,Ltd.
No.500 Yuanguo Road, Anting,Jiading District,
Shanghai 201814, P.R. China
Tel: +86 21-69573266 Fax: +86 21-69573296
Email: shkruger@krugerchina.com

CHINA (WUHAN)
WUHAN KRUGER VENTILATION CO. LTD.
No. 805, Huian Ave, Dongxihu District, Wuhan, Hubei, P.R. China 430040
Tel: +86 27- 83248840/83060522/83097505
Fax: +86 27- 83261886
Email: whkruger@krugerwh.com

HONG KONG
KRUGER VENTILATION (HONG KONG) LIMITED.
Flat C, 9/F, Yeung Yiu Chung (No.8) Industrial Building,
20 Wang Hoi Road, Kowloon Bay, Kowloon, Hong Kong
Tel: +852 22469182 Fax: +852 22469187
Email: info@kruger.com.hk

TAIPEI
KRUGER VENTILATION (TAIWAN) CO. LTD.
No. 157, Ping-an Rd, Hengfeng Village,
Dayuan Shiang Taoyuan County 337, Taiwan
Tel: +886 3-3859119 Fax: +886 3-3859118
Email: sales@krugertwn.com.tw

MALAYSIA
KRUVENT INDUSTRIES (M) SDN. BHD.
Lot 850, Jalan Subang 7, Taman Perindustrian Subang,
47500, Subang Jaya, Selangor D.E.
Tel: +603 80743399 Fax: +603 80743388
Email: mktg@kruger.com.my

PHILIPPINES
KRUGER M & E INDUSTRIES CORPORATION
B3 Welborne Industrial Park
Bancal Carmona Cavite 4116, Philippines
Tel: +63-2-7 6223260 * +63-46 4129652
HP. +63 925 8018444
Email: mktg@krugerph.net

VIETNAM
KRUGER VENTILATION INDUSTRIES (VIETNAM) CO. LTD.
Lot A7. 2-4, C2 Road, Thanh Thanh Cong IZ,
Trang Bang Dist. Tay Ninh Province, Vietnam
Tel: +84-276 3585200/01/02 Fax: +84-276 3585199
Email: mktg@krugervn.com

Edition1
Printed in February 2023

Kruger Ventilation Industries Asia Co., Ltd.

30/159 Moo 1, Sinsakorn Industrial Estate
Chetsadawithi Road, Khok Kham Mueng,
Samuthsakorn 74000, Thailand
Tel: +662 1054298 Fax: +662 0248256-9
Website: www.krugerfan.com
CAT052.E0 February 2023

A member of

Soler&Palau Ventilation Group