AXIAL FLOW FAN DIRECT DRIVEN

KRUGER



Series TDA

Construction
Double flanged casing is produced in mild steed or galvanised steel, available in short and long cased. The impeller having manually adjustable pitch blades in made of PPG, PAG or Aluminium.

Finish
Painting or galvanised after manufacture are normal finishes on all parts.

Operating Temperature
-20℃ to +55℃

Motors
Totally enclosed Class 'F' motor, to a min. IP54 protection are fitted as standard. Standard motor up to 2.2kW are usually supplied on DOL starting, motor 3.0kW and above are star/ delta starting.

Airflow Direction
Air flowing from impeller to motor (B) is fitted as standard. Air fowing from motor to impeller (A) can be supplied on request.

Kruger Ventilation (Taiwan) Co., Ltd. certifies that the **TDA 315/12AA/5-5 (145)** shown herein is licensed to bear the AMCA Seal. The ratings shown are based on tests and procedures performed in accordance with AMCA publication 211 and comply with the requirements of the AMCA Certified Ratings Program.

MODEL: TDA-315/12AA/5-5/__(145)

Blade angle

* All Dimension in mm

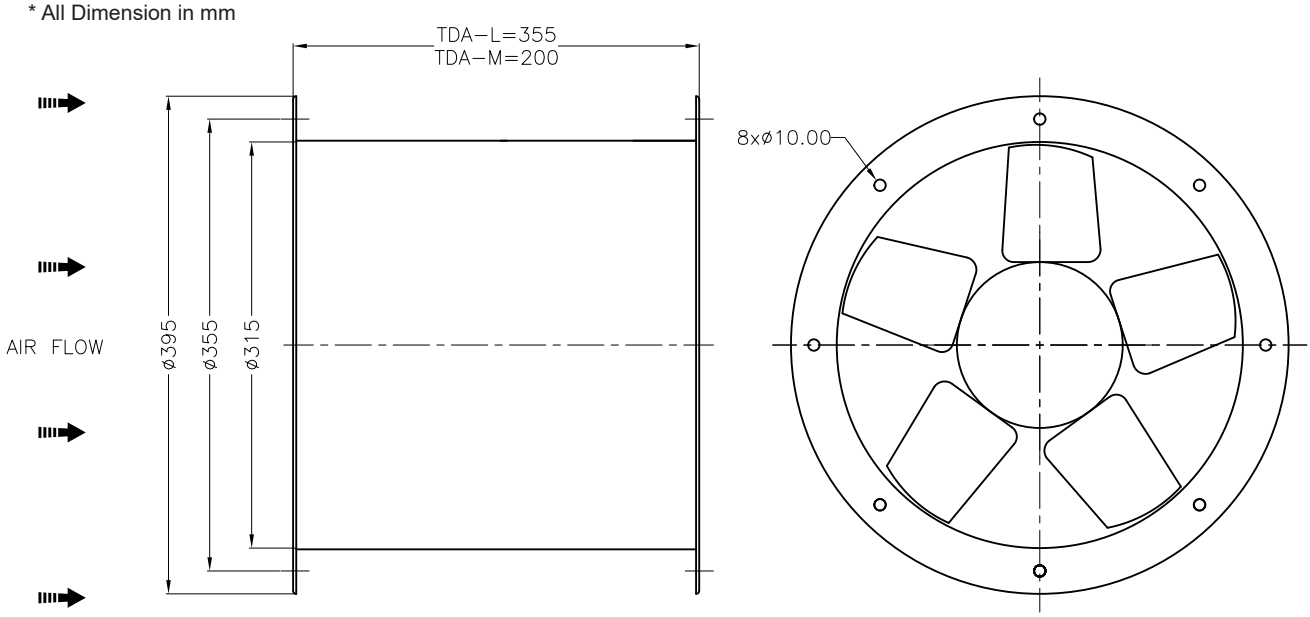

LEA315.E3.KTW March 2026
Edition 1
Printed in March 2026

TDA 315/12AA/5-5 (145)
2850 rpm - 50 Hz

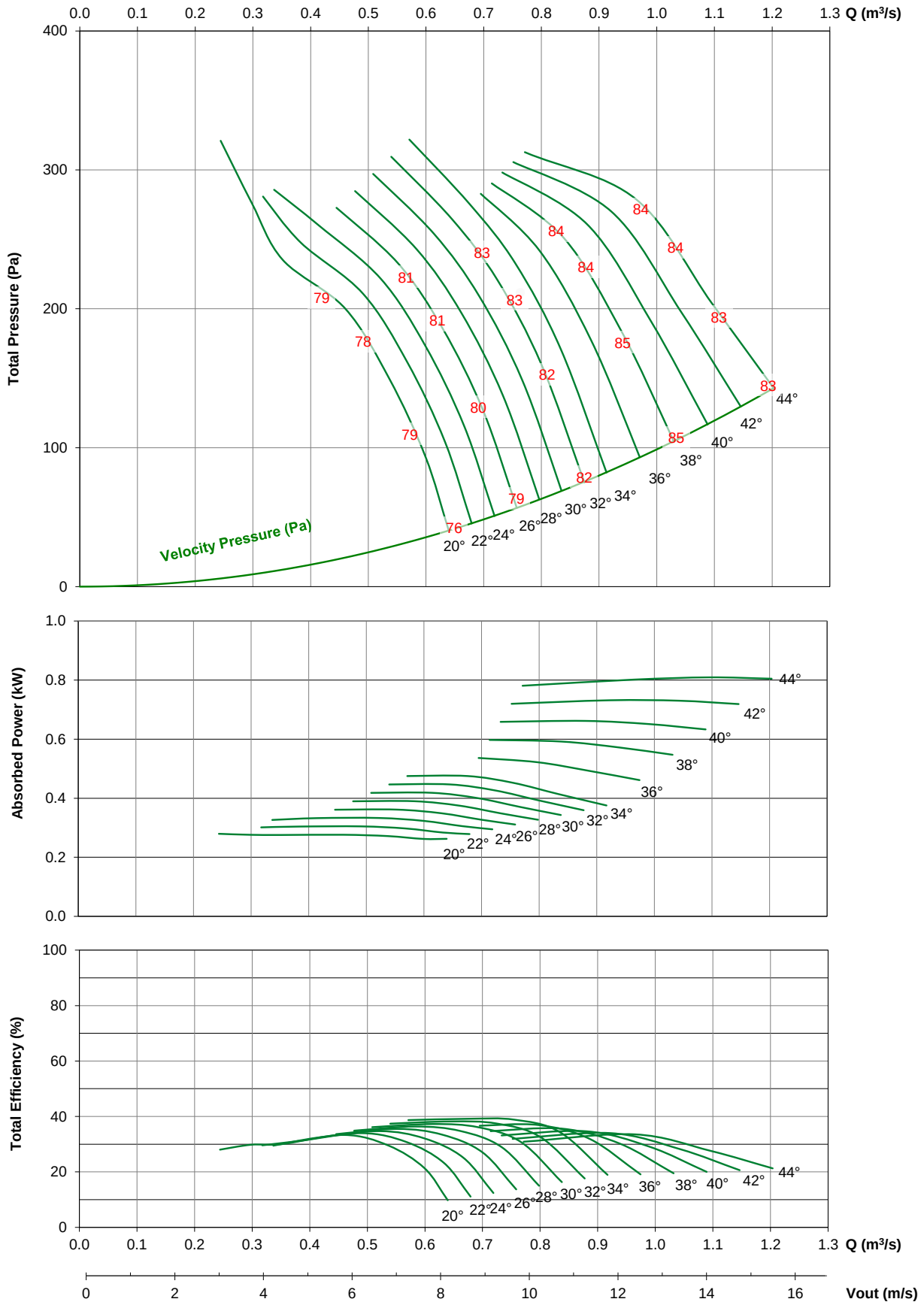

- Performance certified is for installation type D - ducted inlet, ducted outlet. Performance ratings do not include the effects of appurtenances (accessories).
- The A-weighted sound ratings shown have been calculated per AMCA International Standard 301. Values shown are for inlet Lwi(A) sound power levels for installation type D - ducted inlet, ducted outlet. Ratings include the effects of duct end correction.
- The AMCA Certified Ratings Seal applies to air performance only.

TDA 315/12AA/5-5 (145)
1450 rpm - 50 Hz

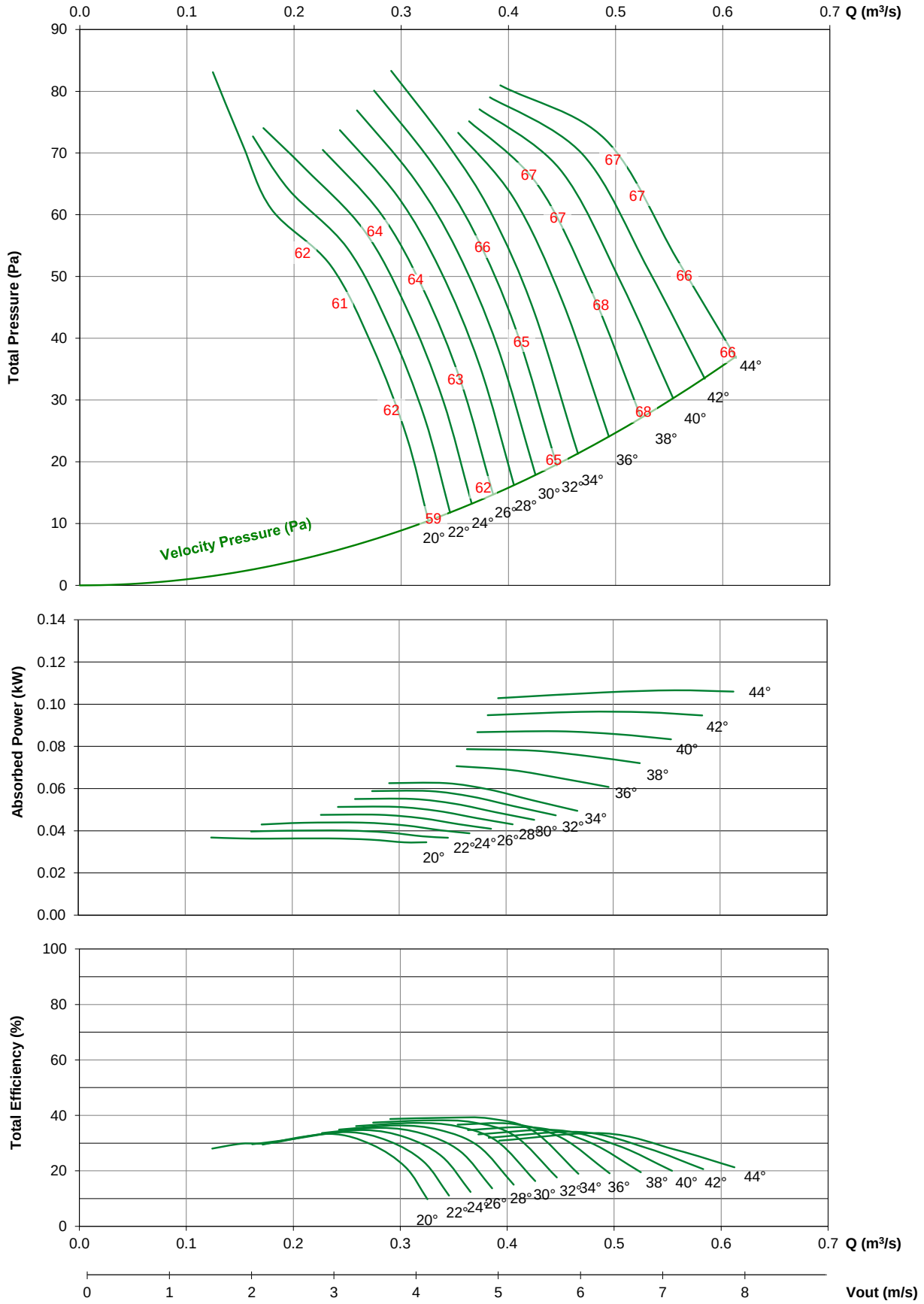

- Performance certified is for installation type D - ducted inlet, ducted outlet. Performance ratings do not include the effects of appurtenances (accessories).
- The A-weighted sound ratings shown have been calculated per AMCA International Standard 301. Values shown are for inlet Lwi(A) sound power levels for installation type D - ducted inlet, ducted outlet. Ratings include the effects of duct end correction.
- The AMCA Certified Ratings Seal applies to air performance only.

TDA 315/12AA/5-5 (145)
3450 rpm - 60 Hz

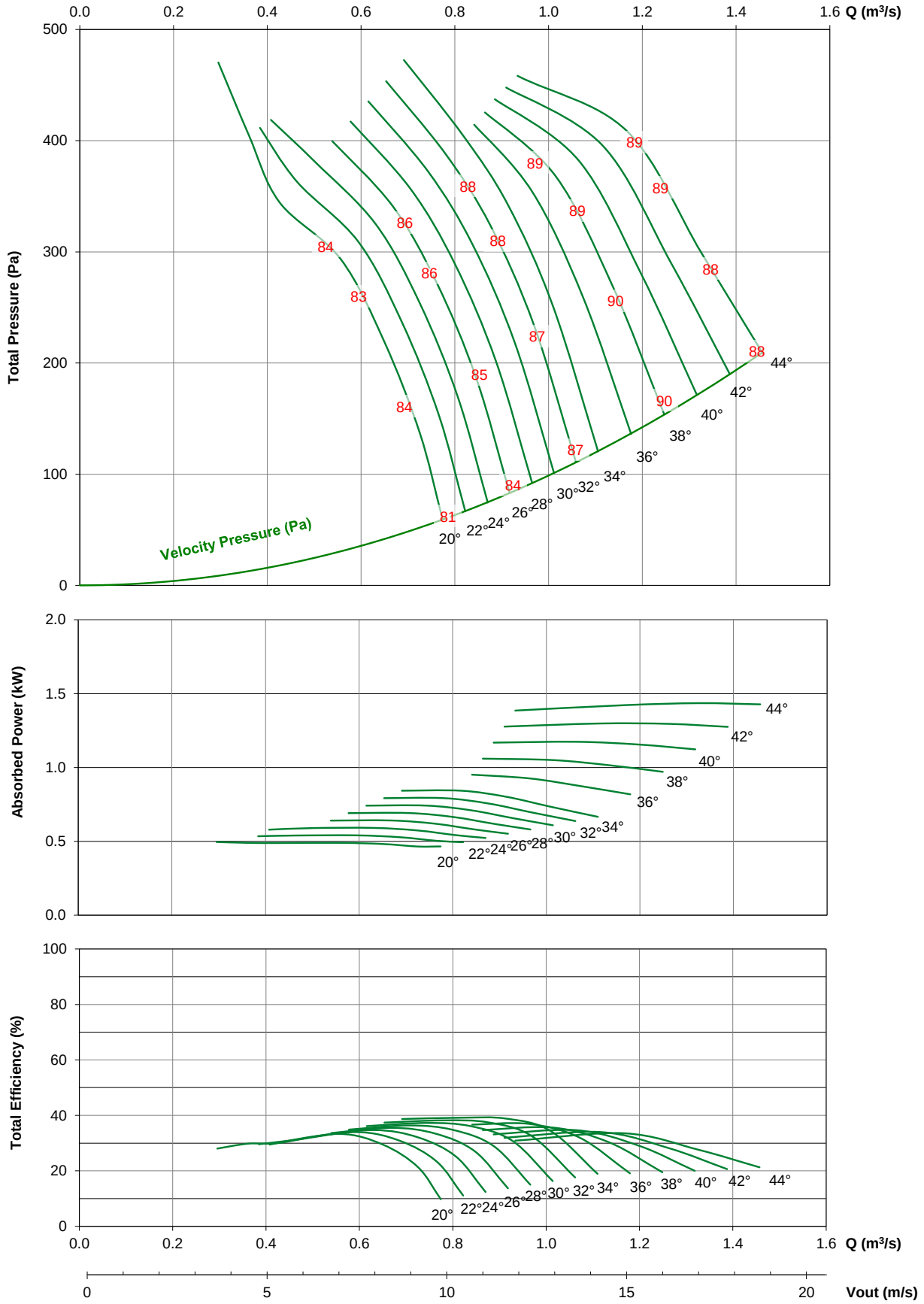

- Performance certified is for installation type D - ducted inlet, ducted outlet. Performance ratings do not include the effects of appurtenances (accessories).
- The A-weighted sound ratings shown have been calculated per AMCA International Standard 301. Values shown are for inlet Lwi(A) sound power levels for installation type D - ducted inlet, ducted outlet. Ratings include the effects of duct end correction.
- The AMCA Certified Ratings Seal applies to air performance only.

TDA 315/12AA/5-5 (145)
1750 rpm - 60 Hz

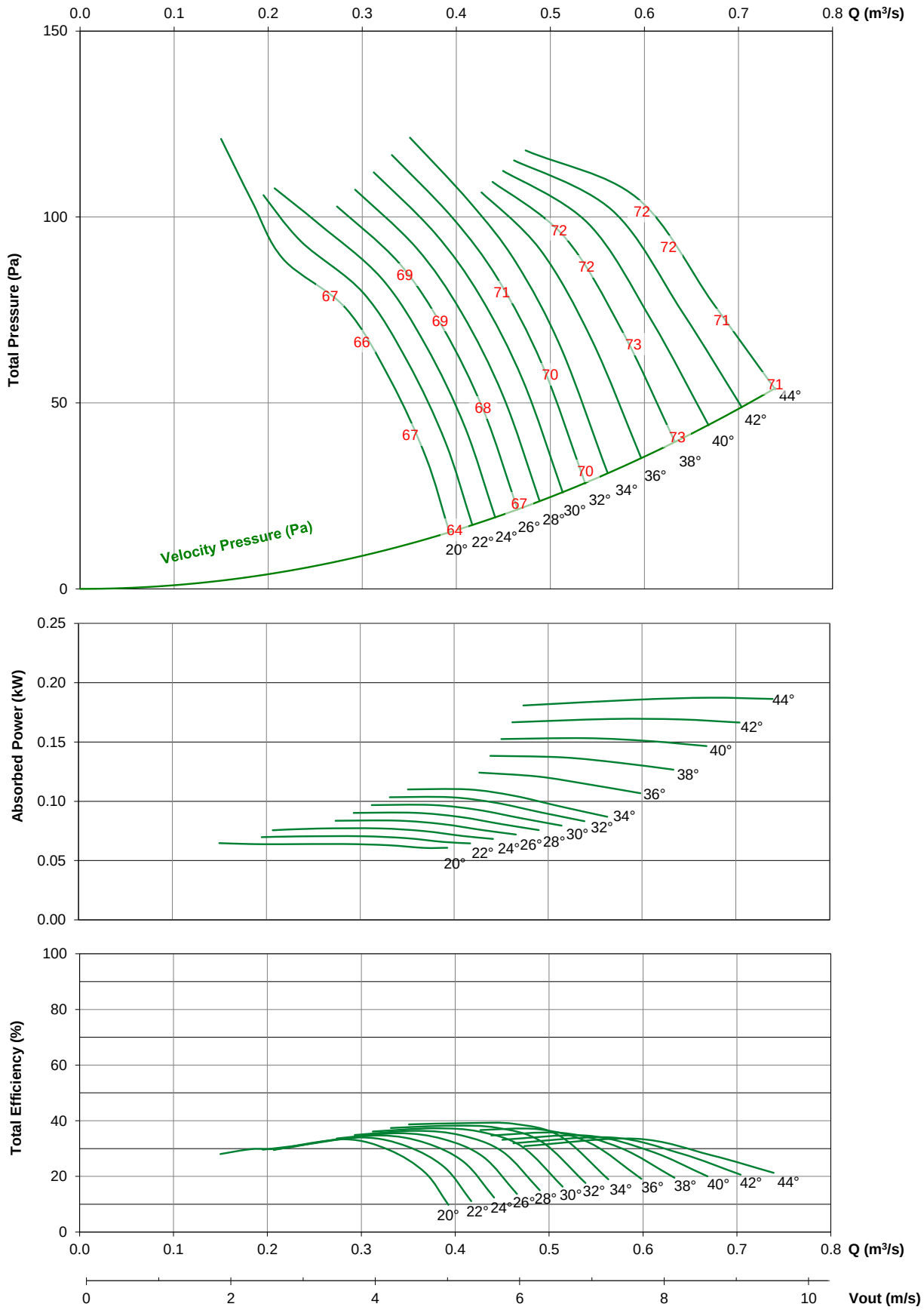

- Performance certified is for installation type D - ducted inlet, ducted outlet. Performance ratings do not include the effects of appurtenances (accessories).
- The A-weighted sound ratings shown have been calculated per AMCA International Standard 301. Values shown are for inlet Lwi(A) sound power levels for installation type D - ducted inlet, ducted outlet. Ratings include the effects of duct end correction.
- The AMCA Certified Ratings Seal applies to air performance only.