KRUGER

VANE AXIAL FAN

DIRECT DRIVEN

VANE AXIAL FAN DIRECT DRIVEN



Series TDA-V

Features
For commercial and industrial applications where large volumes of air are required at moderate to high pressure, special designed integral straightening vanes, reduced turbulence, provide high performance and low sound level.

Construction
Double flanged casing is produced in mild steel or galvanised Steel, the impeller having manually adjustable pitch aerofoil blades is made of PPG, PAG or Aluminium.

Finish
Available in standard finishes of galvanisation or painting.

Operating Temperature
-20°C to +55°C

Motors
Totally enclosed Class 'F' motor, to a min. IP54 protection are fitted as standard. Standard motor up to 2.2kW are usually supplied on DOL starting, motor 3.0kW and above are star/delta starting.

Airflow Direction
Air flowing from impeller to motor is fitted as standard.

Kruger Ventilation (Taiwan) Co., Ltd. certifies that the TDA 315 -V shown herein is licensed to bear the AMCA Seal. The ratings shown are based on tests and procedures performed in accordance with AMCA publication 211 and comply with the requirements of the AMCA Certified Ratings Program.

MODEL: TDA 315-V / 12AA / 5-5 /__/_ - __/__

- Motor no. of pole – 2 or 4
- Motor Power kW
- Airflow direction – B
- Blade angle - 20°, 22°, 24°, 26°, 28°, 30°, 32°, 34°, 36°, 38°, 40°, 42°, 44°

* All Dimension in mm

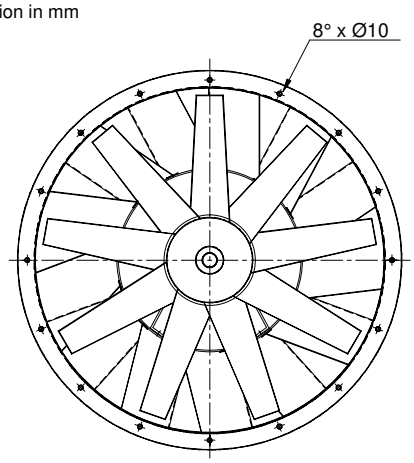

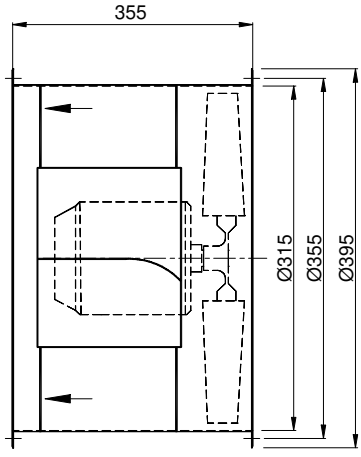

TDA 315-V / 12AA/ 5-5/ _ _ / _
1450rpm - 50Hz

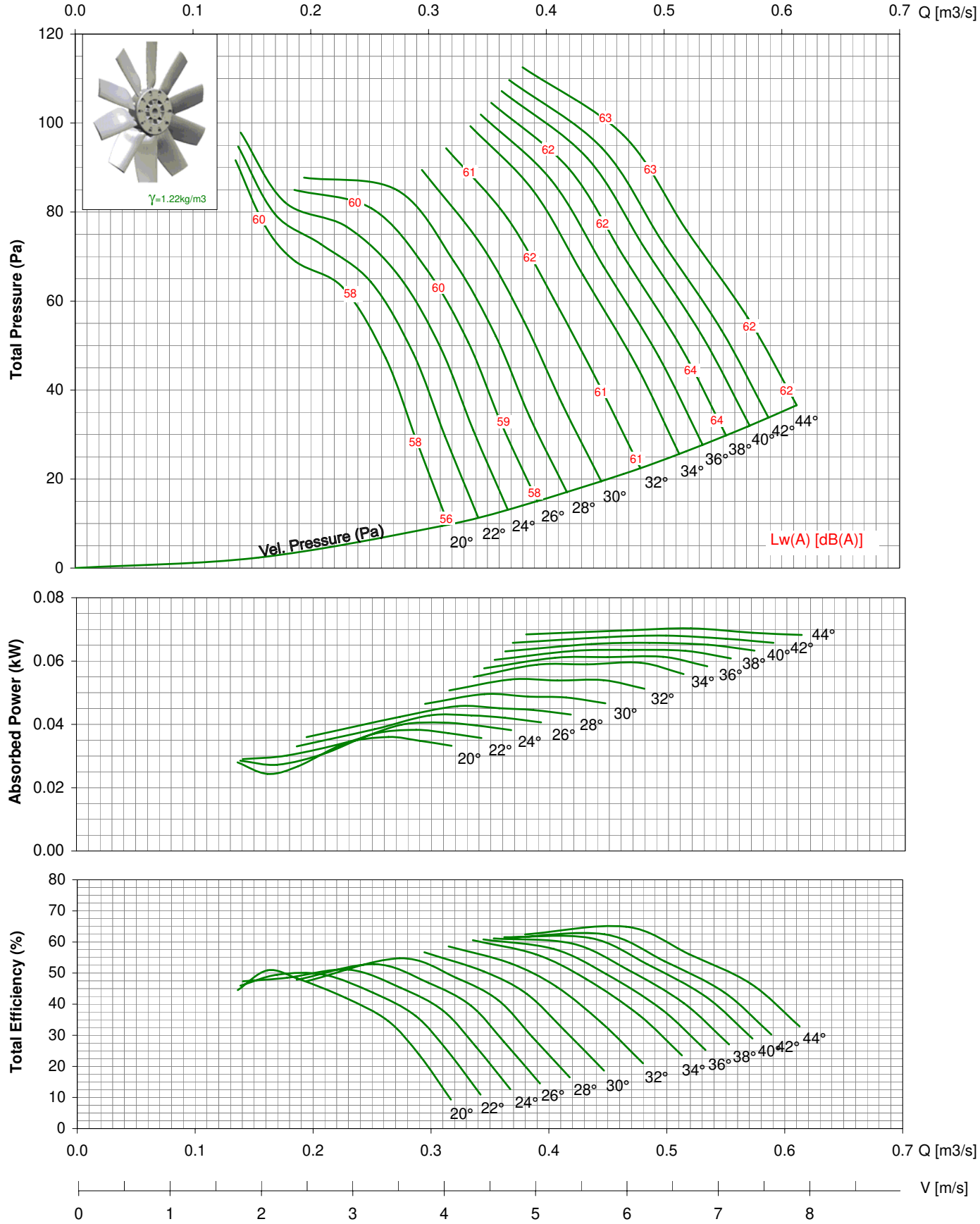

- Performance certified is for installation type D - ducted inlet, ducted outlet. Performance ratings do not include the effects of appurtenances (accessories).
- Power ratings (kW) does not include transmission losses.
- The A-weighted sound ratings shown have been calculated per AMCA Standard 301. Values shown are for inlet Lwi(A) sound power level for installation type D - ducted inlet, ducted outlet, rating include the effect of duct end correction.
- The AMCA Certified Ratings applies to air performance only. dBA levels are not licensed by AMCA international.

TDA 315-V / 12AA/ 5-5/ _ _ / _
2850rpm - 50Hz

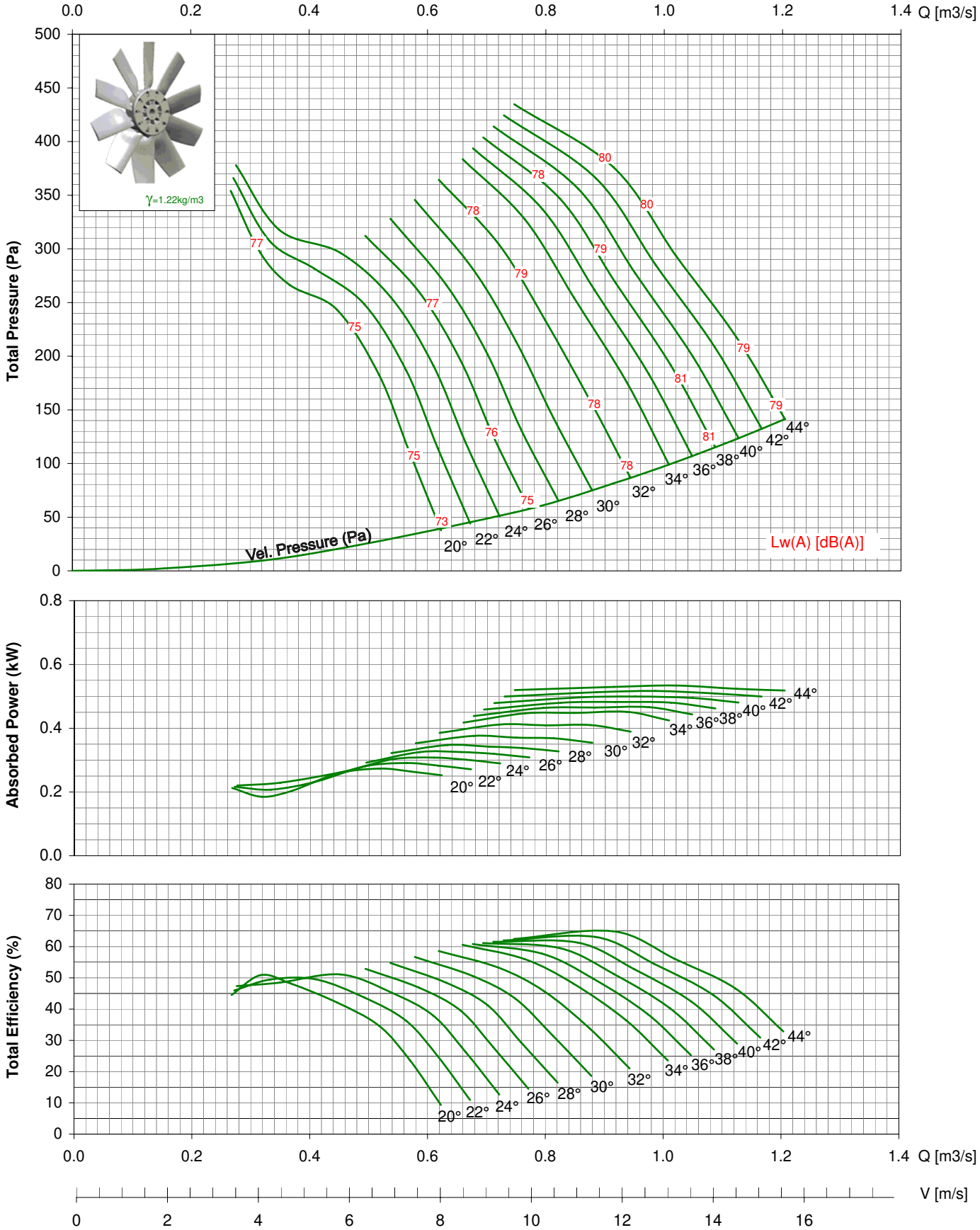

- Performance certified is for installation type D - ducted inlet, ducted outlet. Performance ratings do not include the effects of appurtenances (accessories).
- Power ratings (kW) does not include transmission losses.
- The A-weighted sound ratings shown have been calculated per AMCA Standard 301. Values shown are for inlet Lwi(A) sound power level for installation type D - ducted inlet, ducted outlet, rating include the effect of duct end correction.
- The AMCA Certified Ratings applies to air performance only. dBA levels are not licensed by AMCA international.

TDA 315-V / 12AA/ 5-5/ _ _ / _
1750rpm - 60Hz

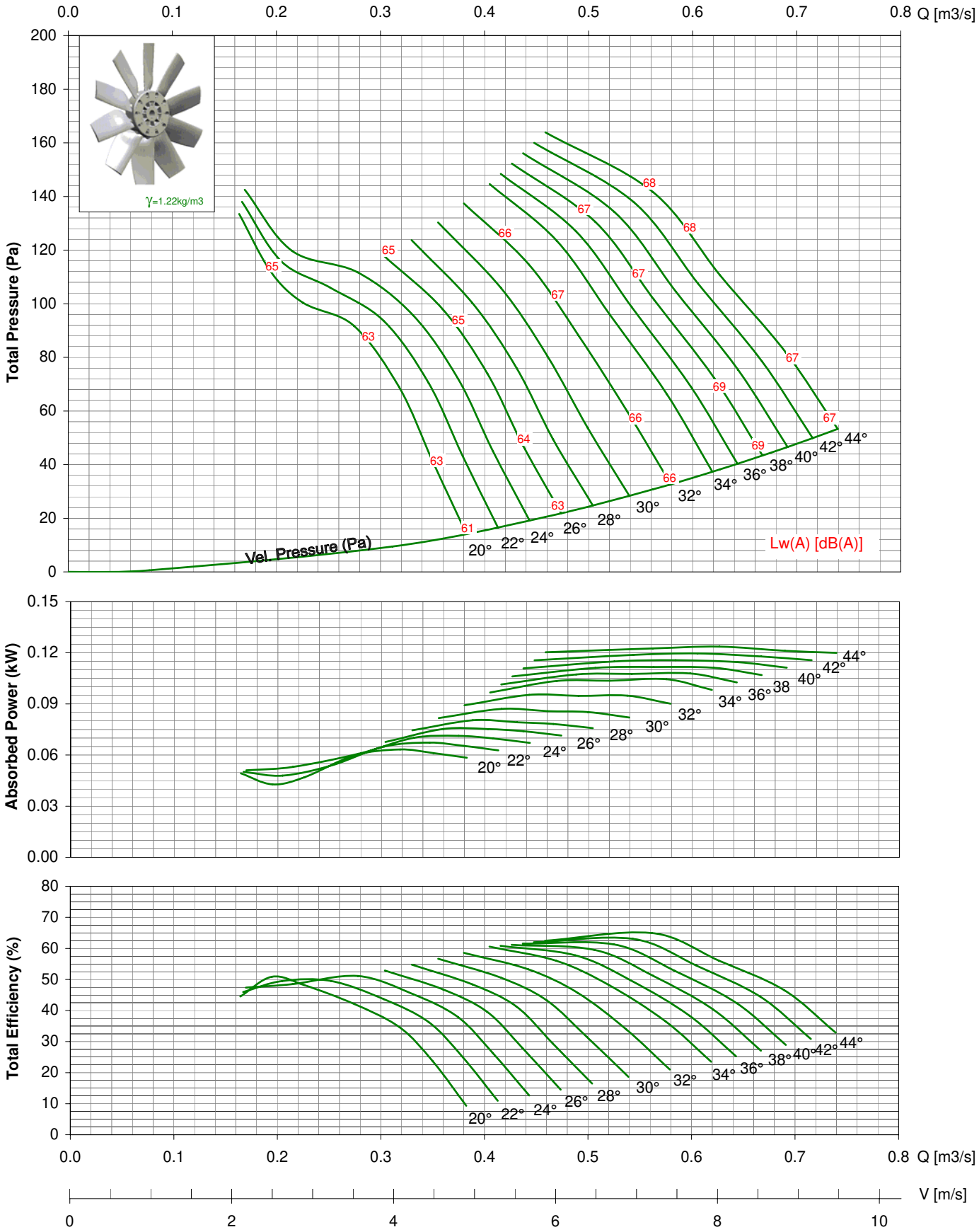

- Performance certified is for installation type D - ducted inlet, ducted outlet. Performance ratings do not include the effects of appurtenances (accessories).
- Power ratings (kW) does not include transmission losses.
- The A-weighted sound ratings shown have been calculated per AMCA Standard 301. Values shown are for inlet Lwi(A) sound power level for installation type D - ducted inlet, ducted outlet, rating include the effect of duct end correction.
- The AMCA Certified Ratings applies to air performance only. dBA levels are not licensed by AMCA international.

TDA 315-V / 12AA/ 5-5/ _ _ / _
3450rpm - 60Hz

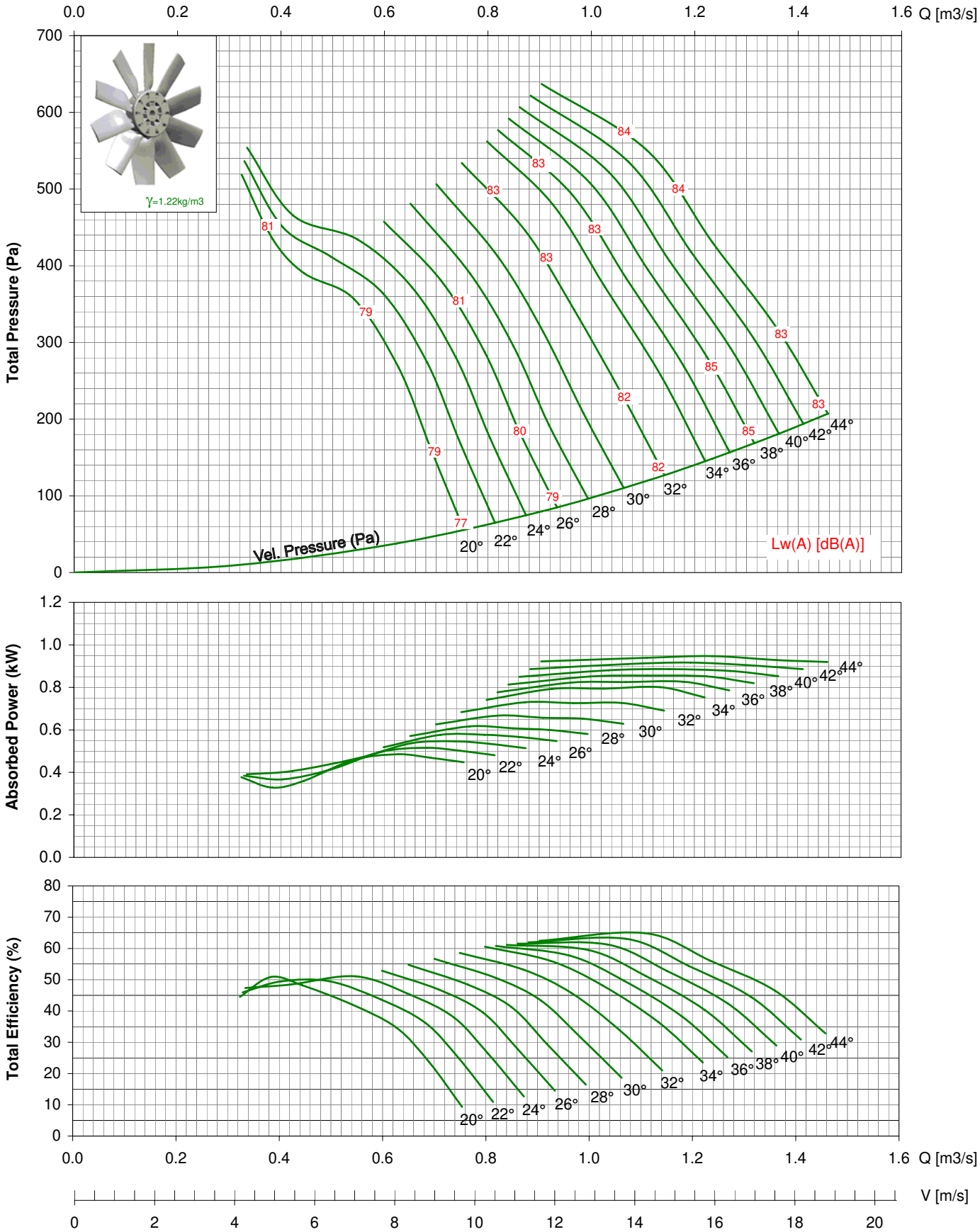

- Performance certified is for installation type D - ducted inlet, ducted outlet. Performance ratings do not include the effects of appurtenances (accessories).
- Power ratings (kW) does not include transmission losses.
- The A-weighted sound ratings shown have been calculated per AMCA Standard 301. Values shown are for inlet Lwi(A) sound power level for installation type D - ducted inlet, ducted outlet, rating include the effect of duct end correction.
- The AMCA Certified Ratings applies to air performance only. dBA levels are not licensed by AMCA international.

VANE AXIAL FAN DIRECT DRIVEN



Series TDA-V

Features
For commercial and industrial applications where large volumes of air are required at moderate to high pressure, special designed integral straightening vanes, reduced turbulence, provide high performance and low sound level.

Construction
Double flanged casing is produced in mild steel or galvanised Steel, the impeller having manually adjustable pitch aerofoil blades is made of PPG, PAG or Aluminium.

Finish
Available in standard finishes of galvanisation or painting.

Operating Temperature
-20°C to +55°C

Motors
Totally enclosed Class 'F' motor, to a min. IP54 protection are fitted as standard. Standard motor up to 2.2kW are usually supplied on DOL starting, motor 3.0kW and above are star/delta starting.

Airflow Direction
Air flowing from impeller to motor is fitted as standard.

Kruger Ventilation (Taiwan) Co., Ltd. certifies that the TDA 355 -V shown herein is licensed to bear the AMCA Seal. The ratings shown are based on tests and procedures performed in accordance with AMCA publication 211 and comply with the requirements of the AMCA Certified Ratings Program.

MODEL: TDA 355-V / 12AA / 5-5 /__/_ - __/__

- Motor no. of pole – 2 or 4
- Motor Power kW
- Airflow direction – B
- Blade angle - 24°, 26°, 28°, 30°, 32°, 34°, 36°, 38°, 40°, 42°, 44°

* All Dimension in mm

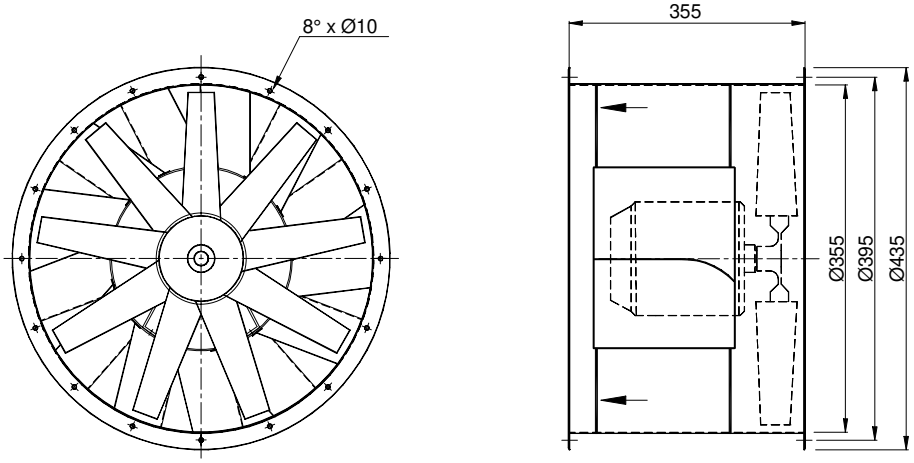

TDA 355-V / 12AA/ 5-5/ _ _ / _
1450rpm - 50Hz

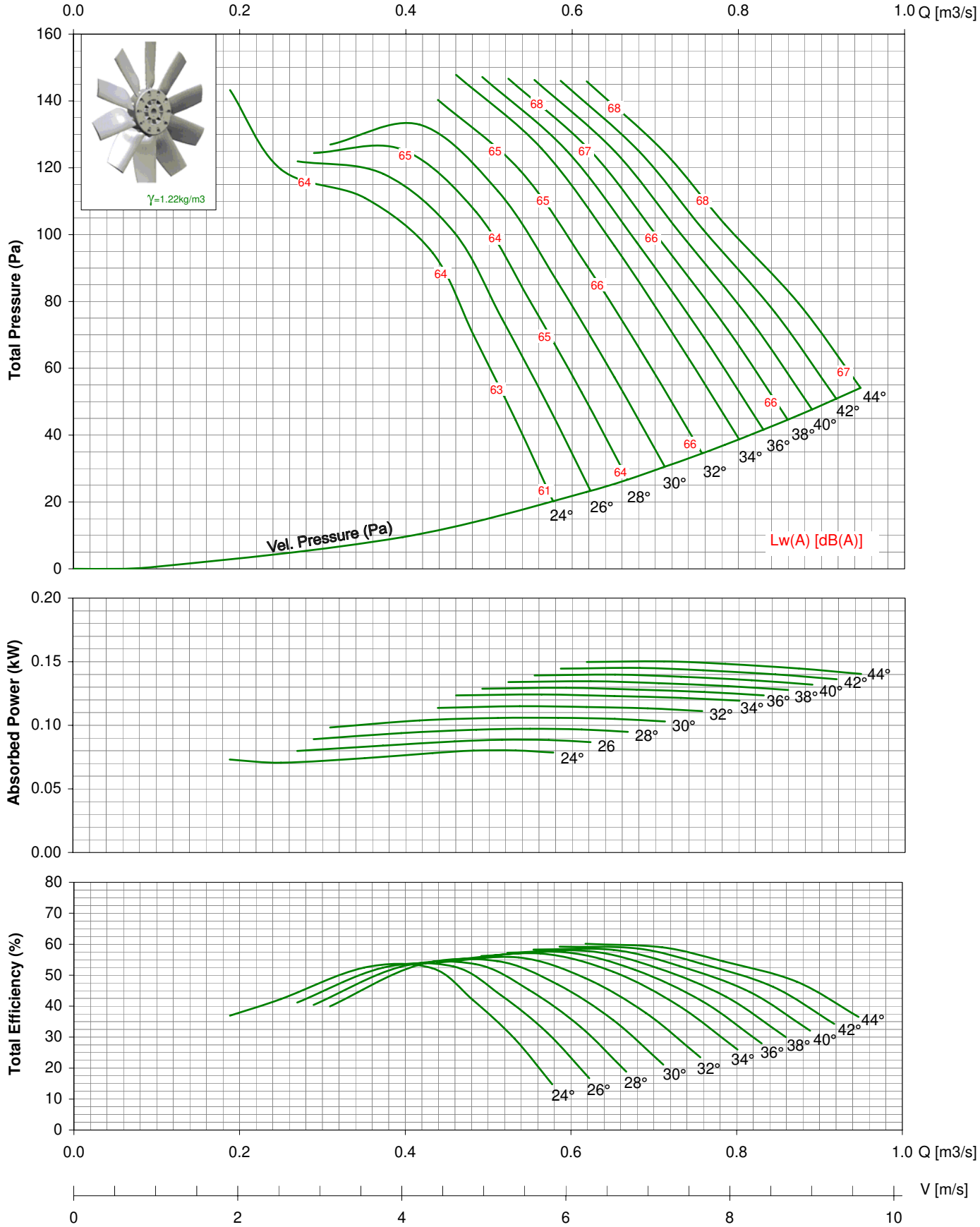

- Performance certified is for installation type D - ducted inlet, ducted outlet. Performance ratings do not include the effects of appurtenances (accessories).
- Power ratings (kW) does not include transmission losses.
- The A-weighted sound ratings shown have been calculated per AMCA Standard 301. Values shown are for inlet Lwi(A) sound power level for installation type D - ducted inlet, ducted outlet, rating include the effect of duct end correction.
- The AMCA Certified Ratings Seal applies to air performance only. dBA levels are not licensed by AMCA international.

TDA 355-V / 12AA/ 5-5/ _ _ / _
2850rpm - 50Hz

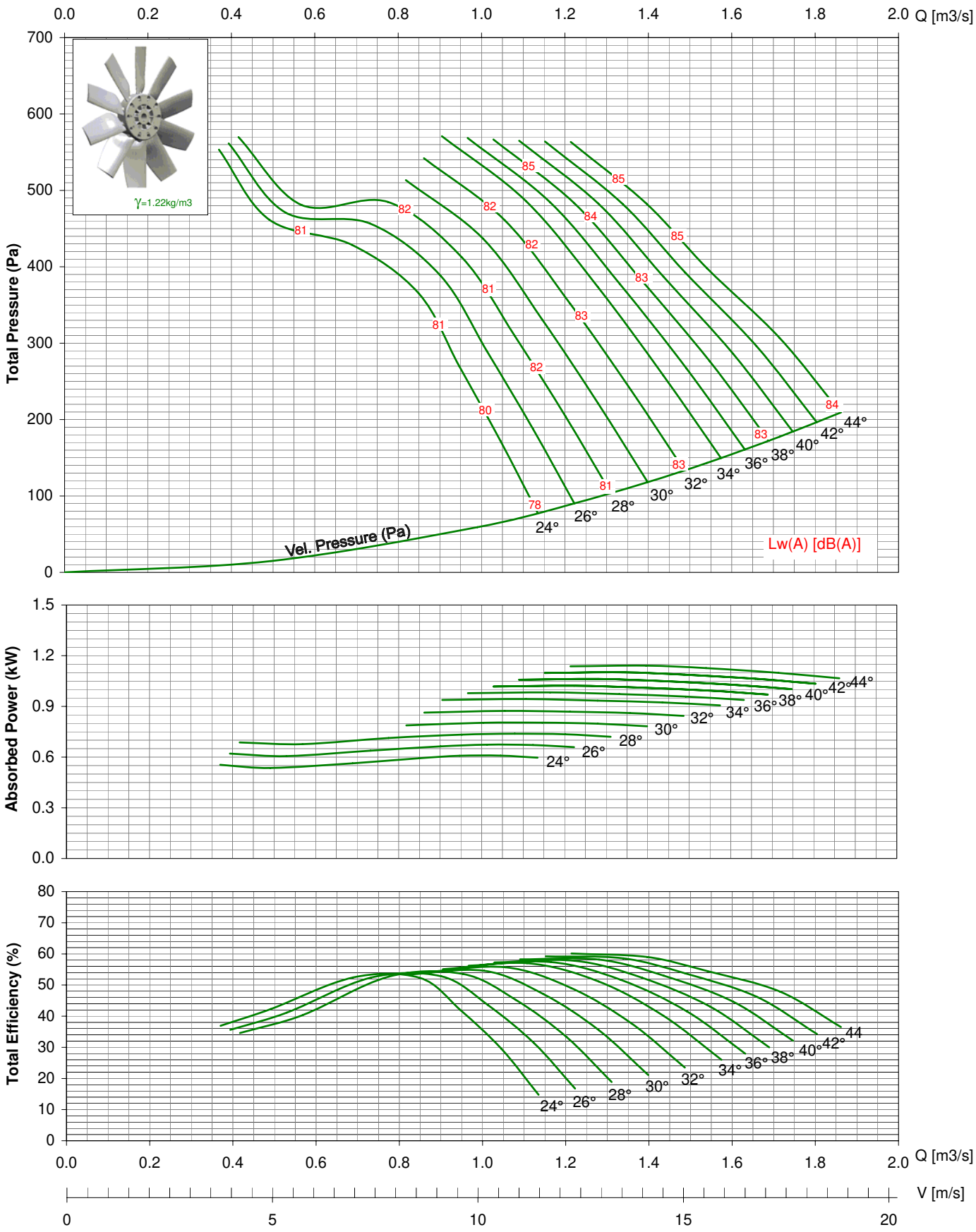

- Performance certified is for installation type D - ducted inlet, ducted outlet. Performance ratings do not include the effects of appurtenances (accessories).
- Power ratings (kW) does not include transmission losses.
- The A-weighted sound ratings shown have been calculated per AMCA Standard 301. Values shown are for inlet Lwi(A) sound power level for installation type D - ducted inlet, ducted outlet, rating include the effect of duct end correction.
- The AMCA Certified Ratings Seal applies to air performance only. dBA levels are not licensed by AMCA international.

TDA 355-V / 12AA/ 5-5/ _ _ / _
1750rpm - 60Hz

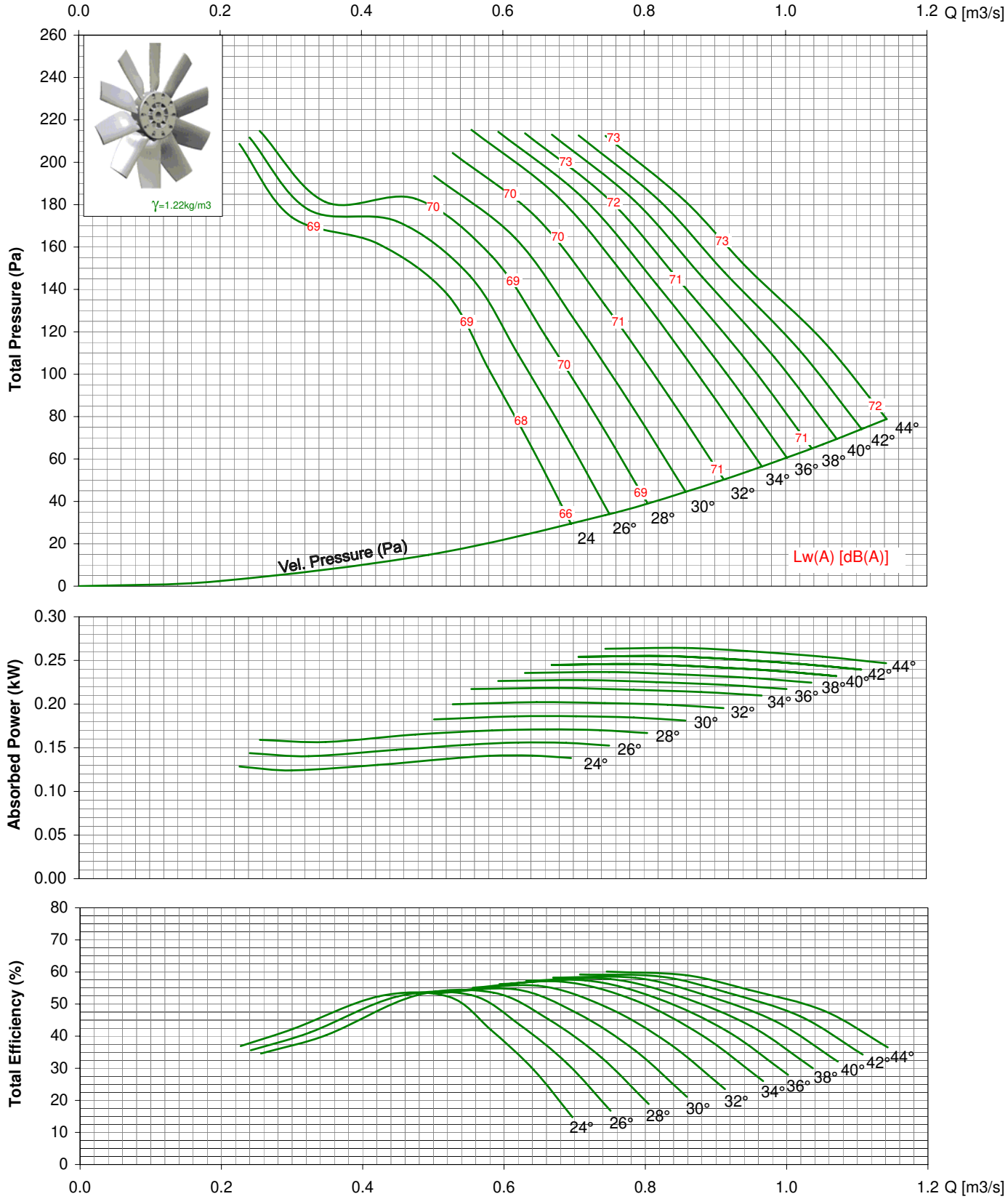

- Performance certified is for installation type D - ducted inlet, ducted outlet. Performance ratings do not include the effects of appurtenances (accessories).
- Power ratings (kW) does not include transmission losses.
- The A-weighted sound ratings shown have been calculated per AMCA Standard 301. Values shown are for inlet Lwi(A) sound power level for installation type D - ducted inlet, ducted outlet, rating include the effect of duct end correction.
- The AMCA Certified Ratings Seal applies to air performance only. dBA levels are not licensed by AMCA international.

TDA 355-V / 12AA/ 5-5/ _ _ / _
3450rpm - 60Hz

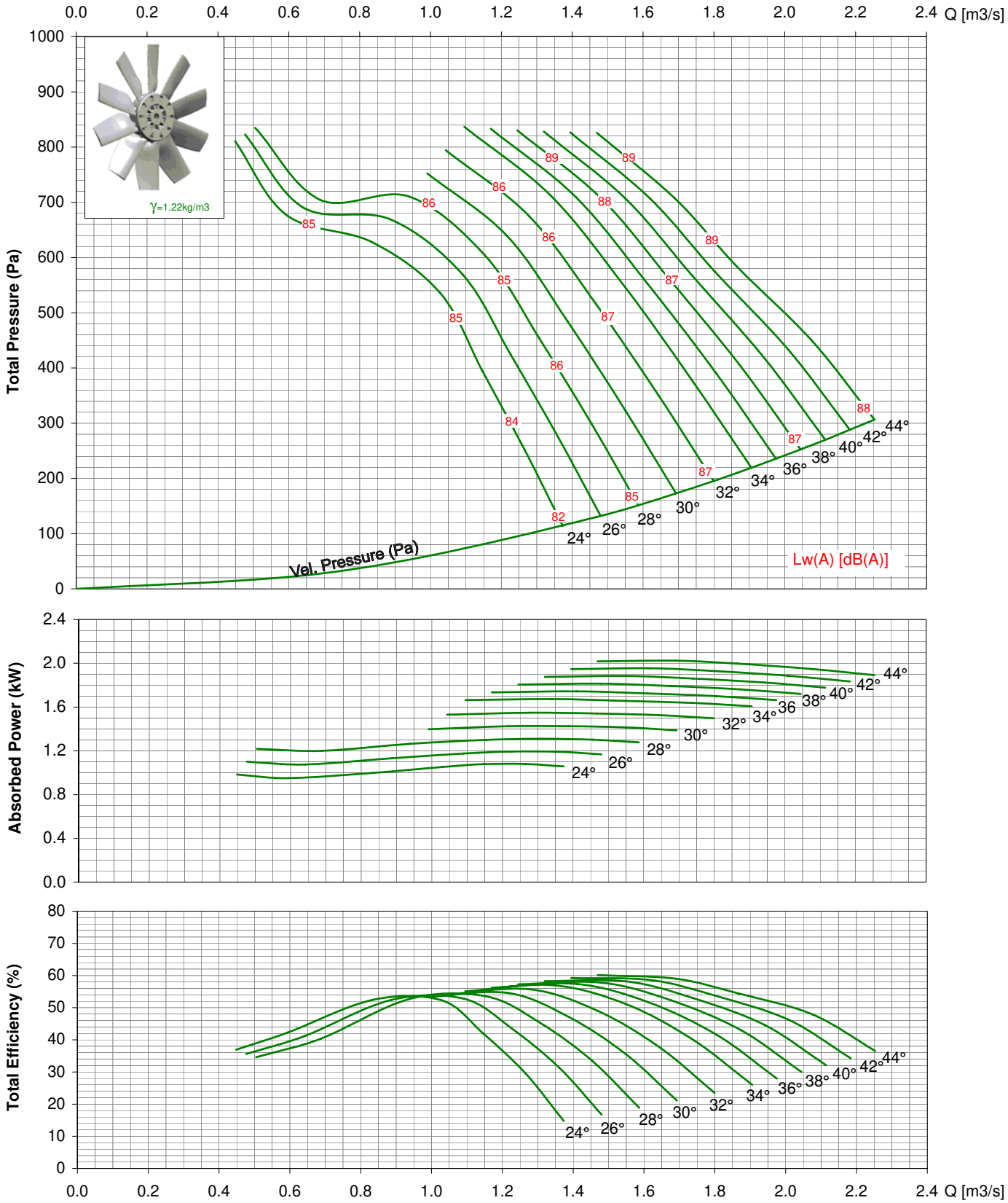

- Performance certified is for installation type D - ducted inlet, ducted outlet. Performance ratings do not include the effects of appurtenances (accessories).
- Power ratings (kW) does not include transmission losses.
- The A-weighted sound ratings shown have been calculated per AMCA Standard 301. Values shown are for inlet Lwi(A) sound power level for installation type D - ducted inlet, ducted outlet, rating include the effect of duct end correction.
- The AMCA Certified Ratings Seal applies to air performance only. dBA levels are not licensed by AMCA international.

VANE AXIAL FAN DIRECT DRIVEN



Kruger Ventilation (Taiwan) Co., Ltd. certifies that the TDA 400 -V shown herein is licensed to bear the AMCA Seal. The ratings shown are based on tests and procedures performed in accordance with AMCA publication 211 and comply with the requirements of the AMCA Certified Ratings Program.

Series TDA-V

Features
For commercial and industrial applications where large volumes of air are required at moderate to high pressure, special designed integral straightening vanes, reduced turbulence, provide high performance and low sound level.

Construction
Double flanged casing is produced in mild steel or galvanised Steel, the impeller having manually adjustable pitch aerofoil blades is made of PPG, PAG or pressure-casted Aluminium.

Finish
Available in standard finishes of galvanisation or painting.

Operating Temperature
-20°C to +55°C

Motors
Totally enclosed Class 'F' motor, to a min. IP54 protection are fitted as standard. Standard motor up to 2.2kW are usually supplied on DOL starting, motor 3.0kW and above are star/delta starting.

Airflow Direction
Air flowing from impeller to motor is fitted as standard.

MODEL: TDA 400-V / 12AA / 5-5 /__/_ - __/__

- Motor no. of pole – 2, 4 or 6
- Motor Power kW
- Airflow direction – B
- Blade angle - 18°, 20°, 22°, 24°, 26°, 28°, 30°, 32°, 34°, 36°, 38°, 40°, 42°

* All Dimension in mm

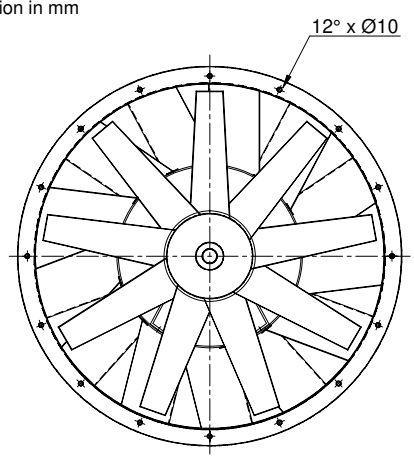

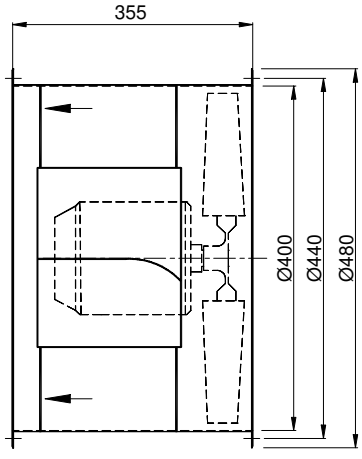

TDA 400-V / 12AA/ 5-5/ _ _ / _
950rpm - 50Hz

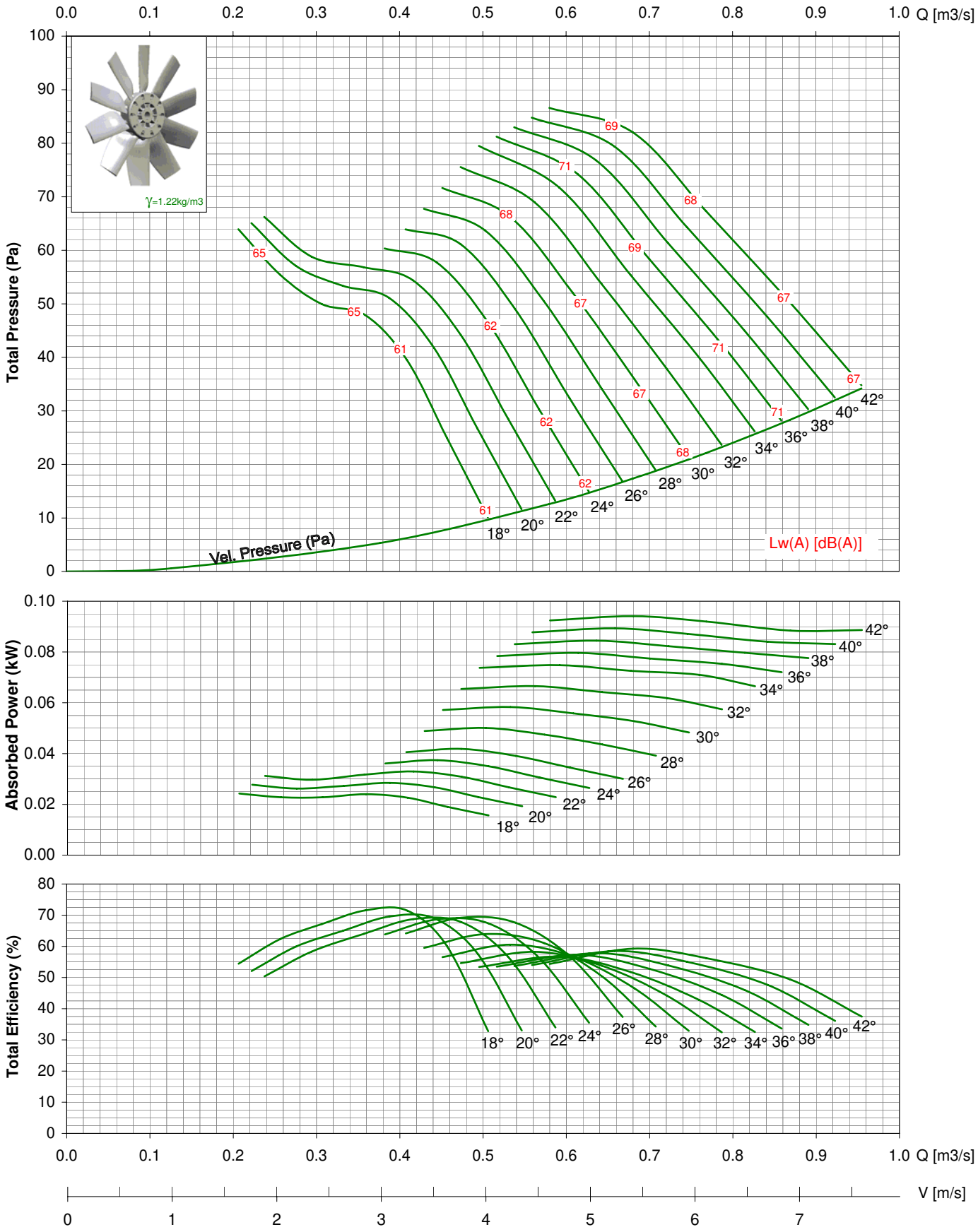

- Performance certified is for installation type D - ducted inlet, ducted outlet. Performance ratings do not include the effects of appurtenances (accessories).
- Power ratings (KW) does not include transmission losses.
- The A-weighted sound ratings shown have been calculated per AMCA Standard 301. Values shown are for inlet Lwi(A) sound power level for installation type D - ducted inlet, ducted outlet, rating include the effect of duct end correction.
- The AMCA Certified Ratings Seal applies to air performance only. dBA levels are not licensed by AMCA international.

TDA 400-V / 12AA/ 5-5/ _ _ / _
1450rpm - 50Hz

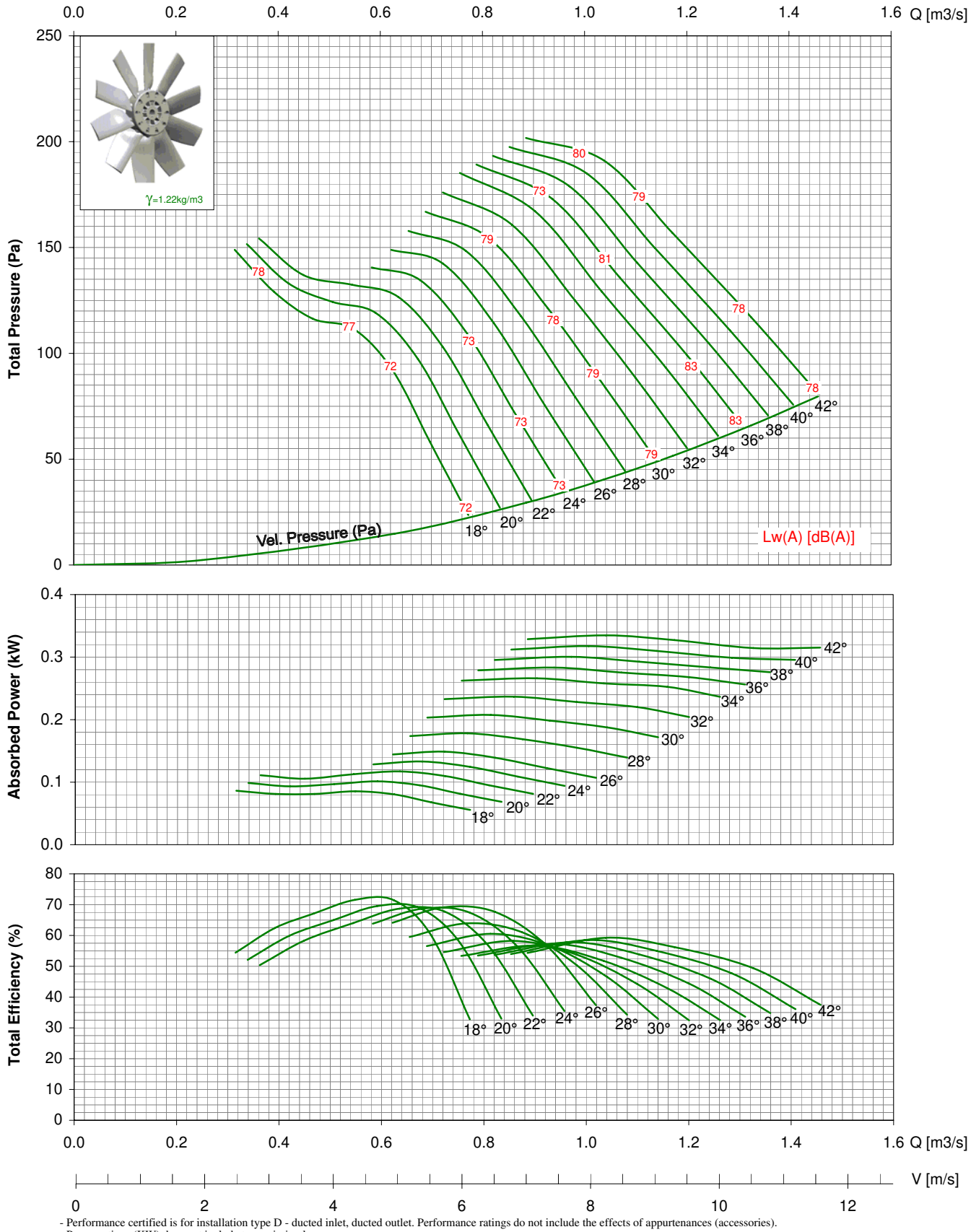

- Performance certified is for installation type D - ducted inlet, ducted outlet. Performance ratings do not include the effects of appurtenances (accessories).
- Power ratings (KW) does not include transmission losses.
- The A-weighted sound ratings shown have been calculated per AMCA Standard 301. Values shown are for inlet Lwi(A) sound power level for installation type D - ducted inlet, ducted outlet, rating include the effect of duct end correction.
- The AMCA Certified Ratings Seal applies to air performance only. dBA levels are not licensed by AMCA international.

TDA 400-V / 12AA/ 5-5/ _ _ / _
2850rpm - 50Hz

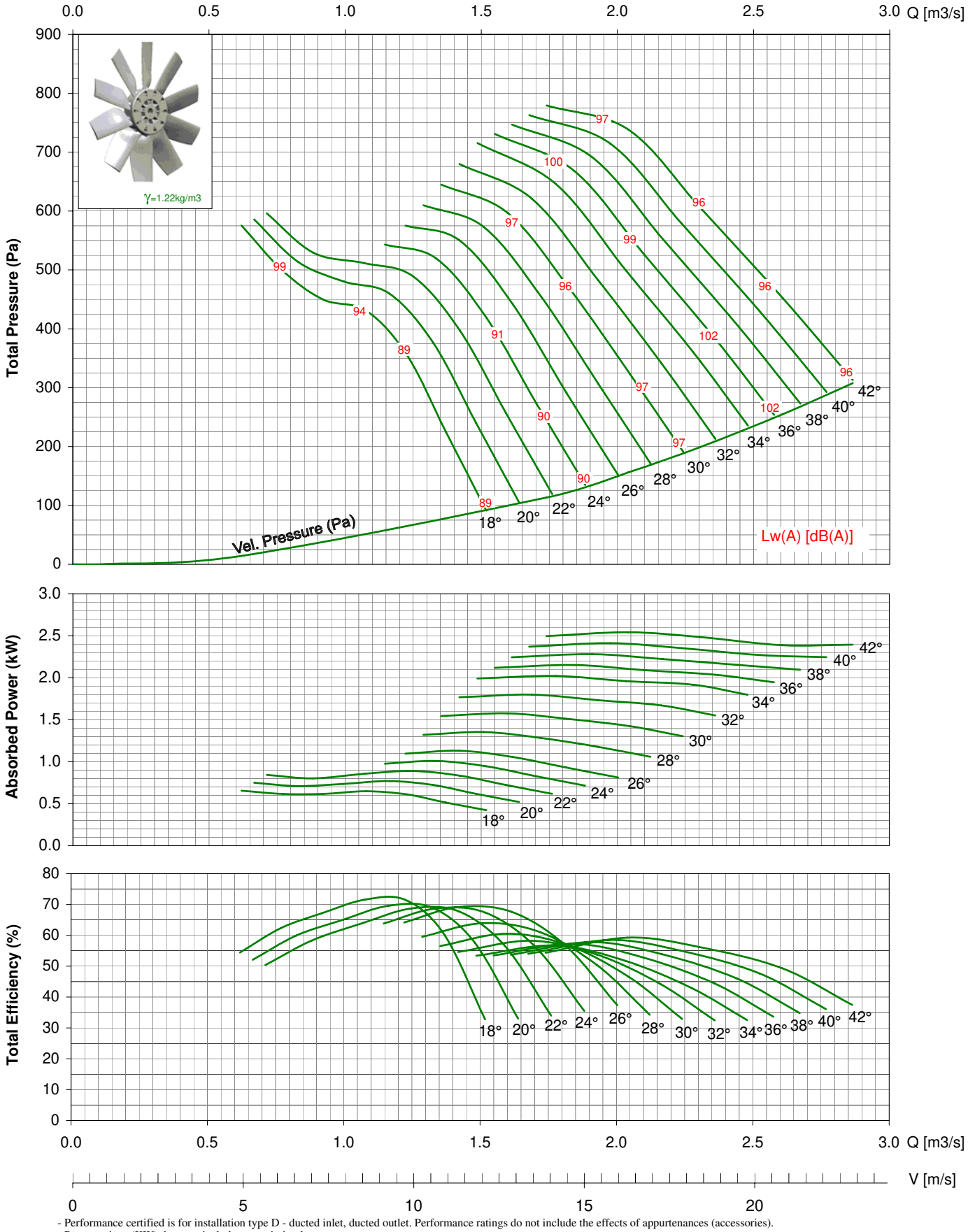

- Performance certified is for installation type D - ducted inlet, ducted outlet. Performance ratings do not include the effects of appurtenances (accessories).
- Power ratings (KW) does not include transmission losses.
- The A-weighted sound ratings shown have been calculated per AMCA Standard 301. Values shown are for inlet Lwi(A) sound power level for installation type D - ducted inlet, ducted outlet, rating include the effect of duct end correction.
- The AMCA Certified Ratings Seal applies to air performance only. dBA levels are not licensed by AMCA international.

TDA 400-V / 12AA/ 5-5/ _ _ / _
1150rpm - 60Hz

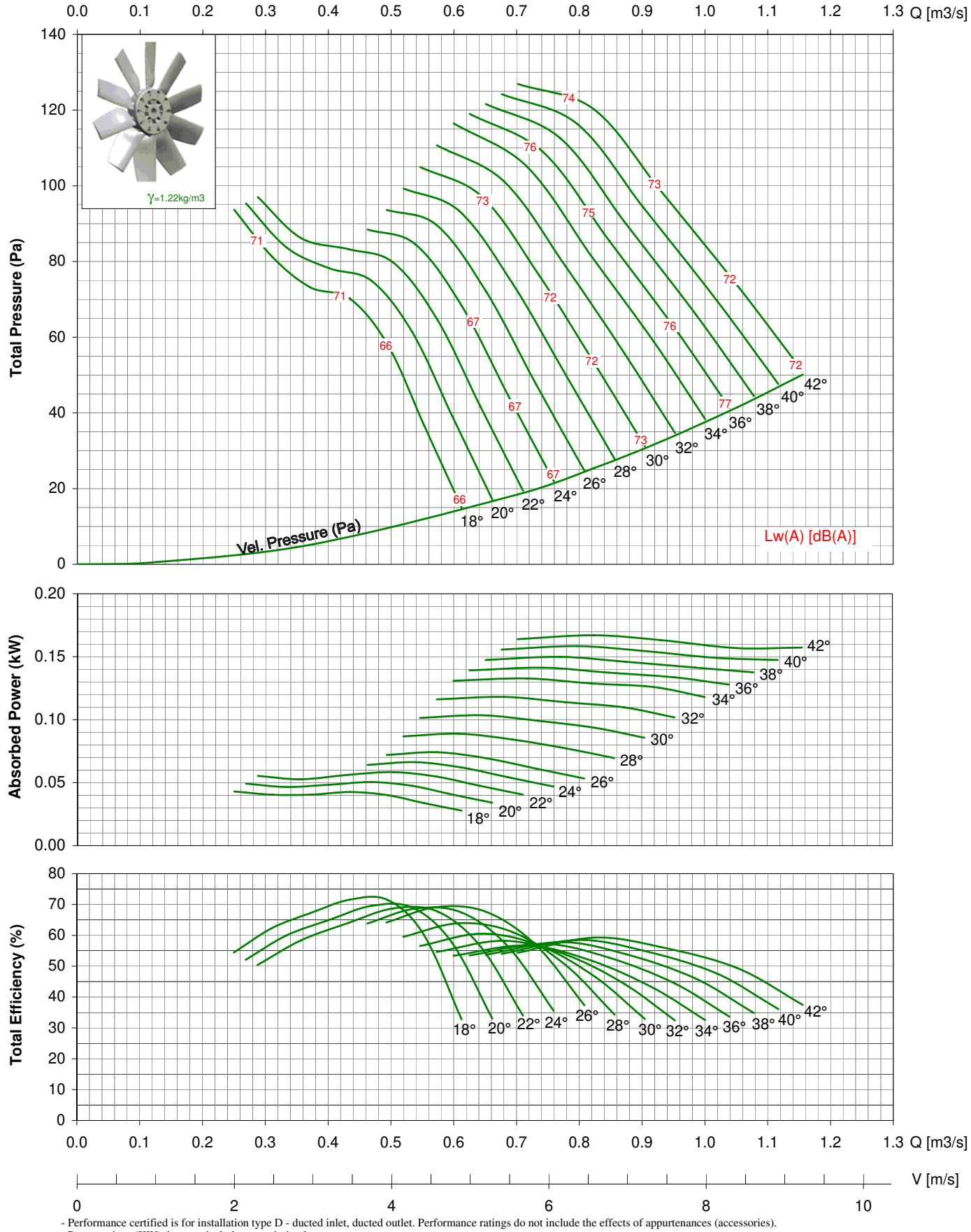

- Performance certified is for installation type D - ducted inlet, ducted outlet. Performance ratings do not include the effects of appurtenances (accessories).
- Power ratings (KW) does not include transmission losses.
- The A-weighted sound ratings shown have been calculated per AMCA Standard 301. Values shown are for inlet Lwi(A) sound power level for installation type D - ducted inlet, ducted outlet, rating include the effect of duct end correction.
- The AMCA Certified Ratings Seal applies to air performance only. dBA levels are not licensed by AMCA international.

TDA 400-V / 12AA/ 5-5/ _ _ / _
1750rpm - 60Hz

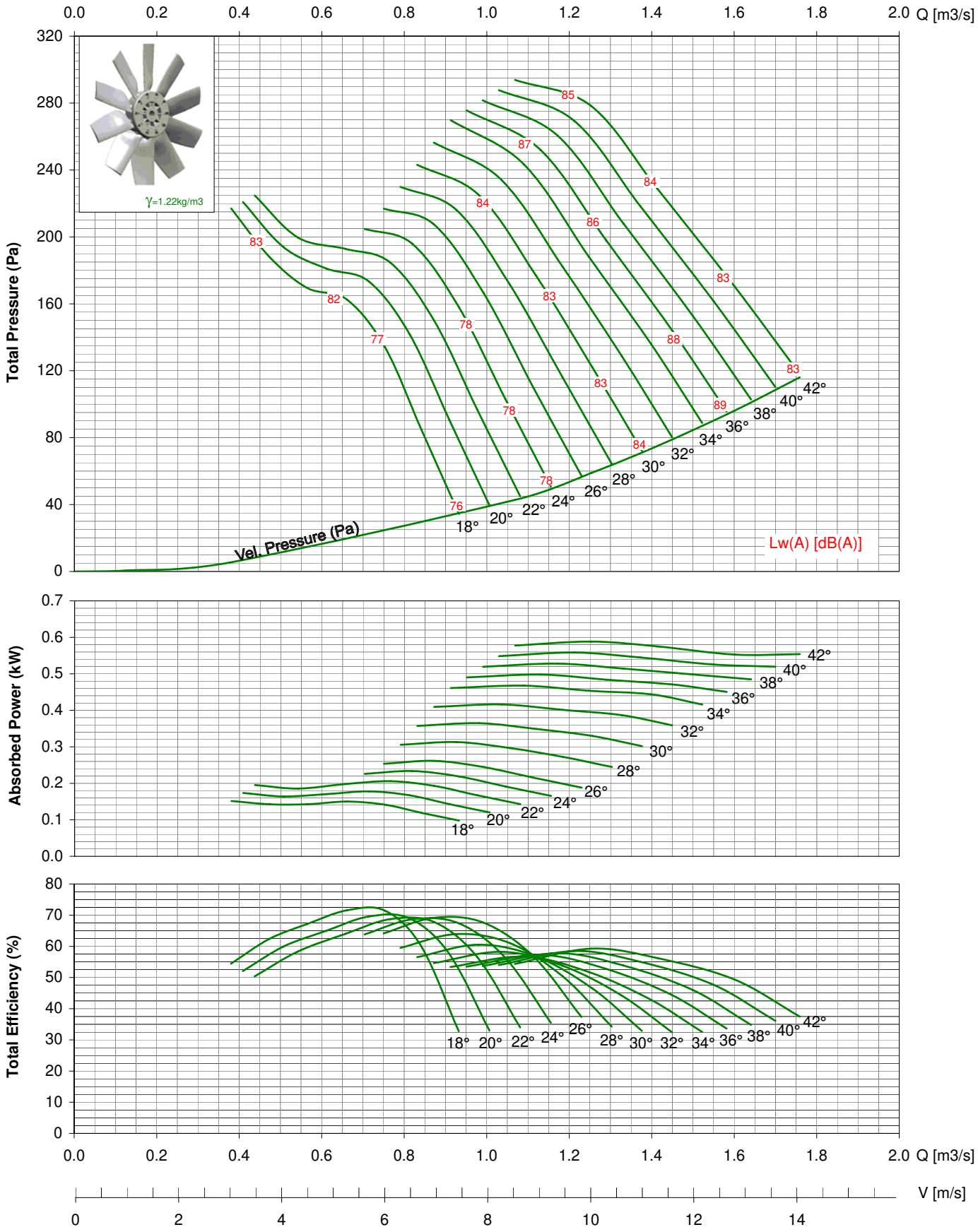

- Performance certified is for installation type D - ducted inlet, ducted outlet. Performance ratings do not include the effects of appurtenances (accessories).
- Power ratings (KW) does not include transmission losses.
- The A-weighted sound ratings shown have been calculated per AMCA Standard 301. Values shown are for inlet Lwi(A) sound power level for installation type D - ducted inlet, ducted outlet, rating include the effect of duct end correction.
- The AMCA Certified Ratings Seal applies to air performance only. dBA levels are not licensed by AMCA international.

TDA 400-V / 12AA/ 5-5/ _ _ / _
3450rpm - 60Hz

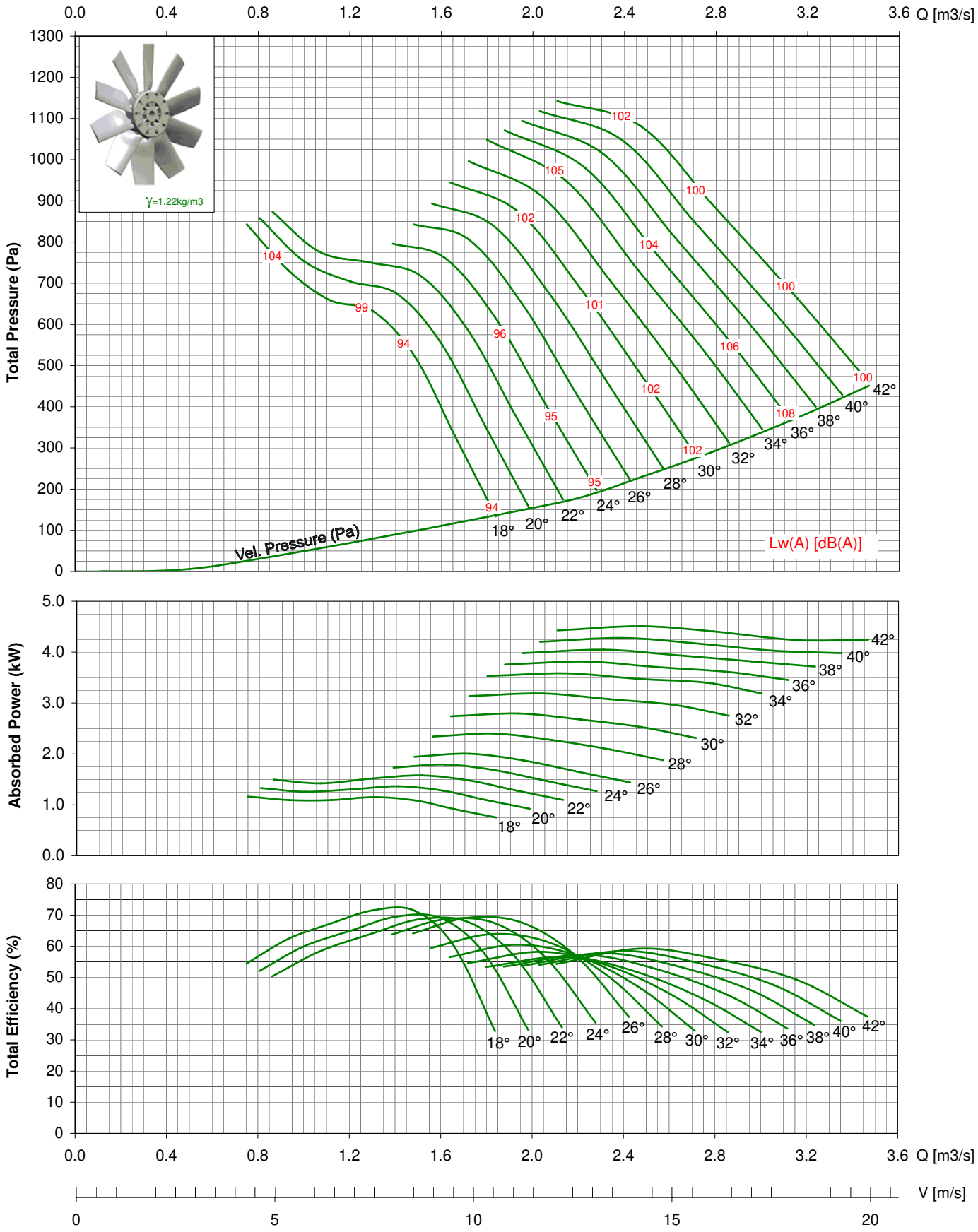

- Performance certified is for installation type D - ducted inlet, ducted outlet. Performance ratings do not include the effects of appurtenances (accessories).
- Power ratings (KW) does not include transmission losses.
- The A-weighted sound ratings shown have been calculated per AMCA Standard 301. Values shown are for inlet Lwi(A) sound power level for installation type D - ducted inlet, ducted outlet, rating include the effect of duct end correction.
- The AMCA Certified Ratings Seal applies to air performance only. dBA levels are not licensed by AMCA international.

VANE AXIAL FAN DIRECT DRIVEN



Series TDA-V

Features
For commercial and industrial applications where large volumes of air are required at moderate to high pressure, special designed integral straightening vanes, reduced turbulence, provide high performance and low sound level.

Construction
Double flanged casing is produced in mild steel or galvanised Steel, the impeller having manually adjustable pitch aerofoil blades is made of PPG, PAG or pressure-casted Aluminium.

Finish
Available in standard finishes of galvanisation or painting.

Operating Temperature
-20°C to +55°C

Motors
Totally enclosed Class 'F' motor, to a min. IP54 protection are fitted as standard. Standard motor up to 2.2kW are usually supplied on DOL starting, motor 3.0kW and above are star/delta starting.

Airflow Direction
Air flowing from impeller to motor is fitted as standard.

Kruger Ventilation (Taiwan) Co., Ltd. certifies that the TDA 450 -V shown herein is licensed to bear the AMCA Seal. The ratings shown are based on tests and procedures performed in accordance with AMCA publication 211 and comply with the requirements of the AMCA Certified Ratings Program.

MODEL: TDA 450-V / 12AA / 5-5 /__/_ - __/__

- Motor no. of pole – 2, 4 or 6
- Motor Power kW
- Airflow direction – B
- Blade angle - 16°, 18°, 20°, 22°, 24°, 26°, 28°, 30°, 32°, 34°, 36°, 38°

* All Dimension in mm

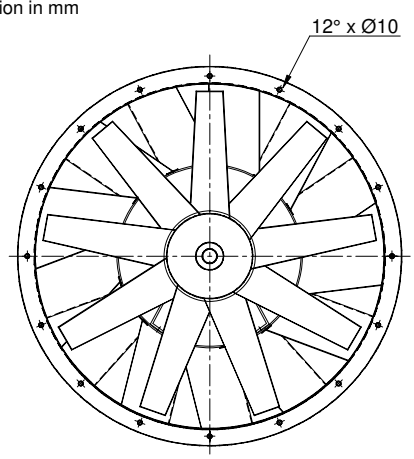

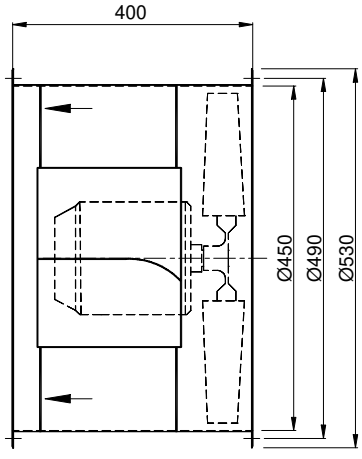

TDA 450-V / 12AA/ 5-5/ _ _ / _
950rpm - 50Hz

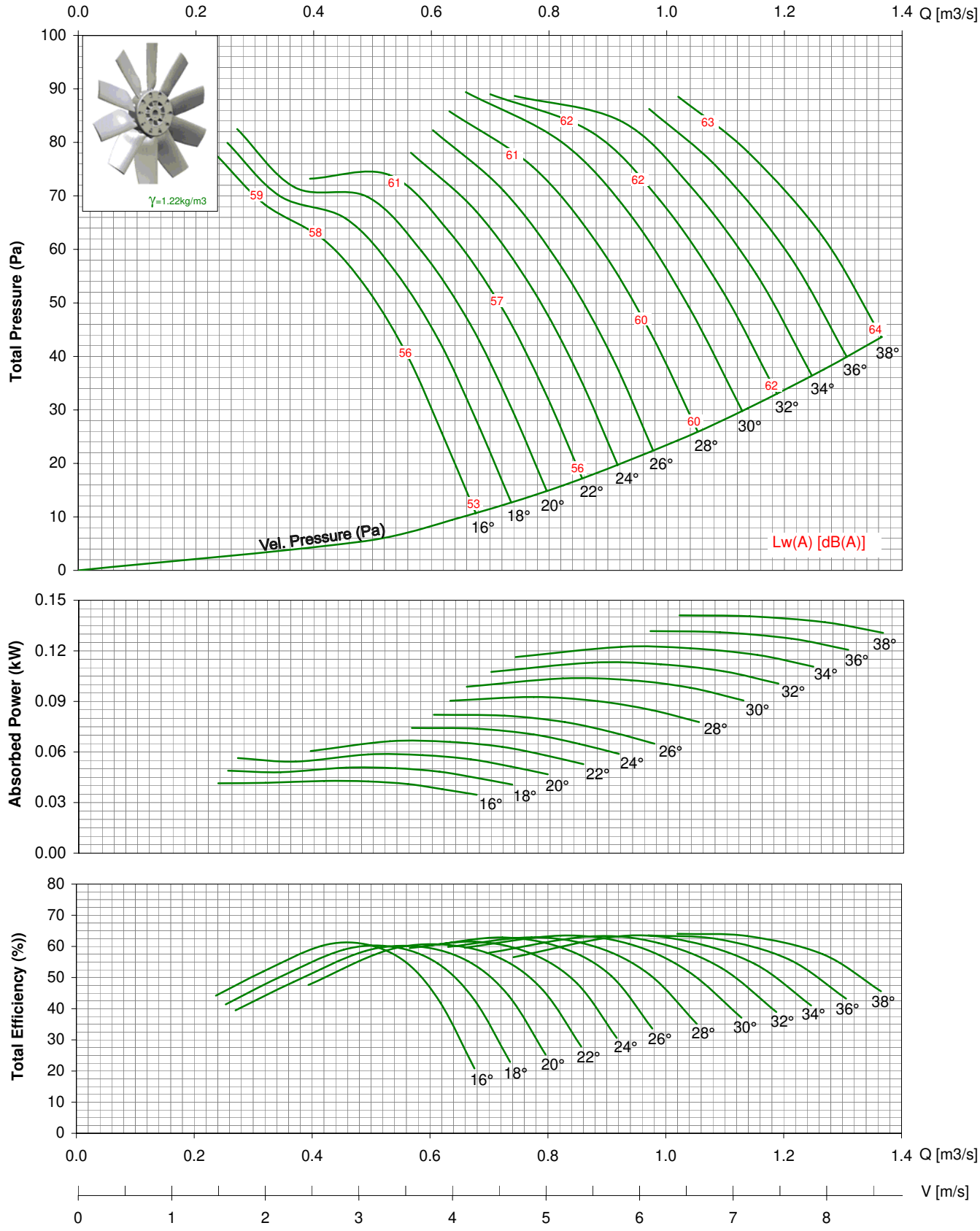

- Performance certified is for installation type D - ducted inlet, ducted outlet. Performance ratings do not include the effects of appurtenances (accessories).
- Power ratings (kW) does not include transmission losses.
- The A-weighted sound ratings shown have been calculated per AMCA Standard 301. Values shown are for inlet Lwi(A) sound power level for installation type D - ducted inlet, ducted outlet, rating include the effect of duct end correction.
- dBA levels are not licensed by AMCA International. The AMCA Certified Ratings Seal applies to air performance only.

TDA 450-V / 12AA/ 5-5/ _ _ / _
1450rpm - 50Hz

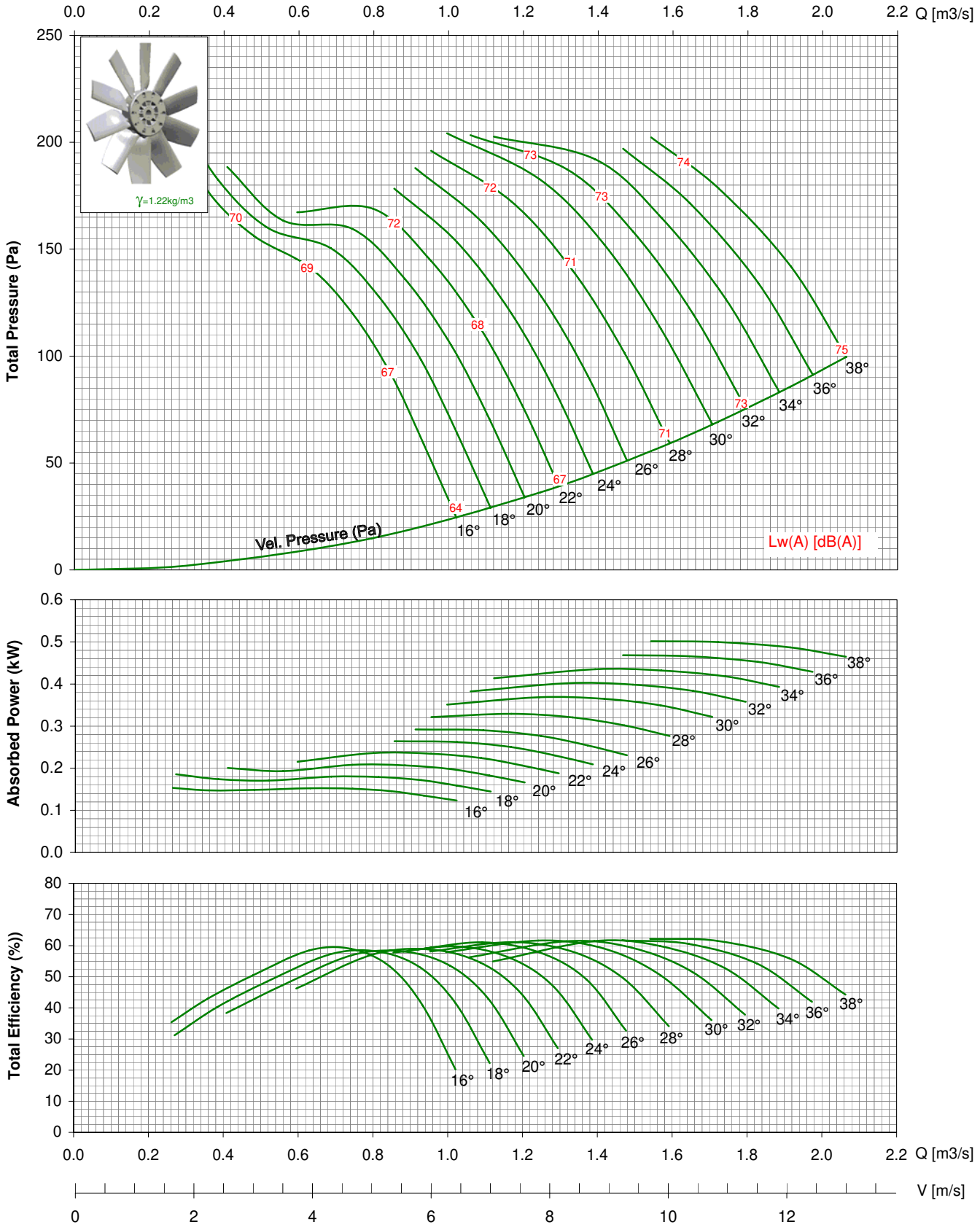

- Performance certified is for installation type D - ducted inlet, ducted outlet. Performance ratings do not include the effects of appurtenances (accessories).
- Power ratings (kW) does not include transmission losses.
- The A-weighted sound ratings shown have been calculated per AMCA Standard 301. Values shown are for inlet Lwi(A) sound power level for installation type D - ducted inlet, ducted outlet, rating include the effect of duct end correction.
- The AMCA Certified Ratings Seal applies to air performance only. dBA levels are not licensed by AMCA International.

TDA 450-V / 12AA/ 5-5/ _ _ / _
2850rpm - 50Hz

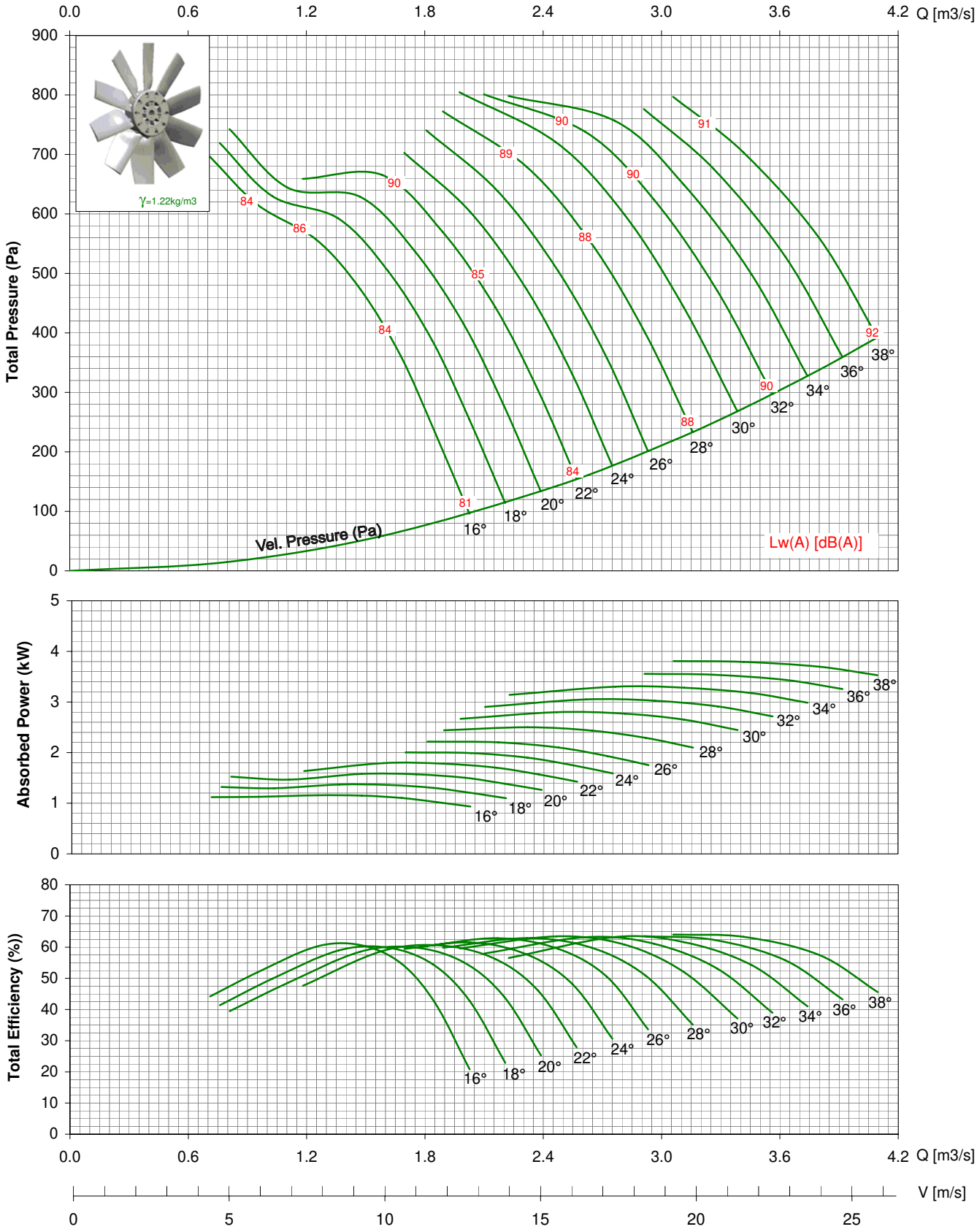

- Performance certified is for installation type D - ducted inlet, ducted outlet. Performance ratings do not include the effects of appurtenances (accessories).
- Power ratings (kW) does not include transmission losses.
- The A-weighted sound ratings shown have been calculated per AMCA Standard 301. Values shown are for inlet Lwi(A) sound power level for installation type D - ducted inlet, ducted outlet, rating include the effect of duct end correction.
- The AMCA Certified Ratings Seal applies to air performance only. dBA levels are not licensed by AMCA International.

TDA 450-V / 12AA/ 5-5/ _ _ / _
1150rpm - 60Hz

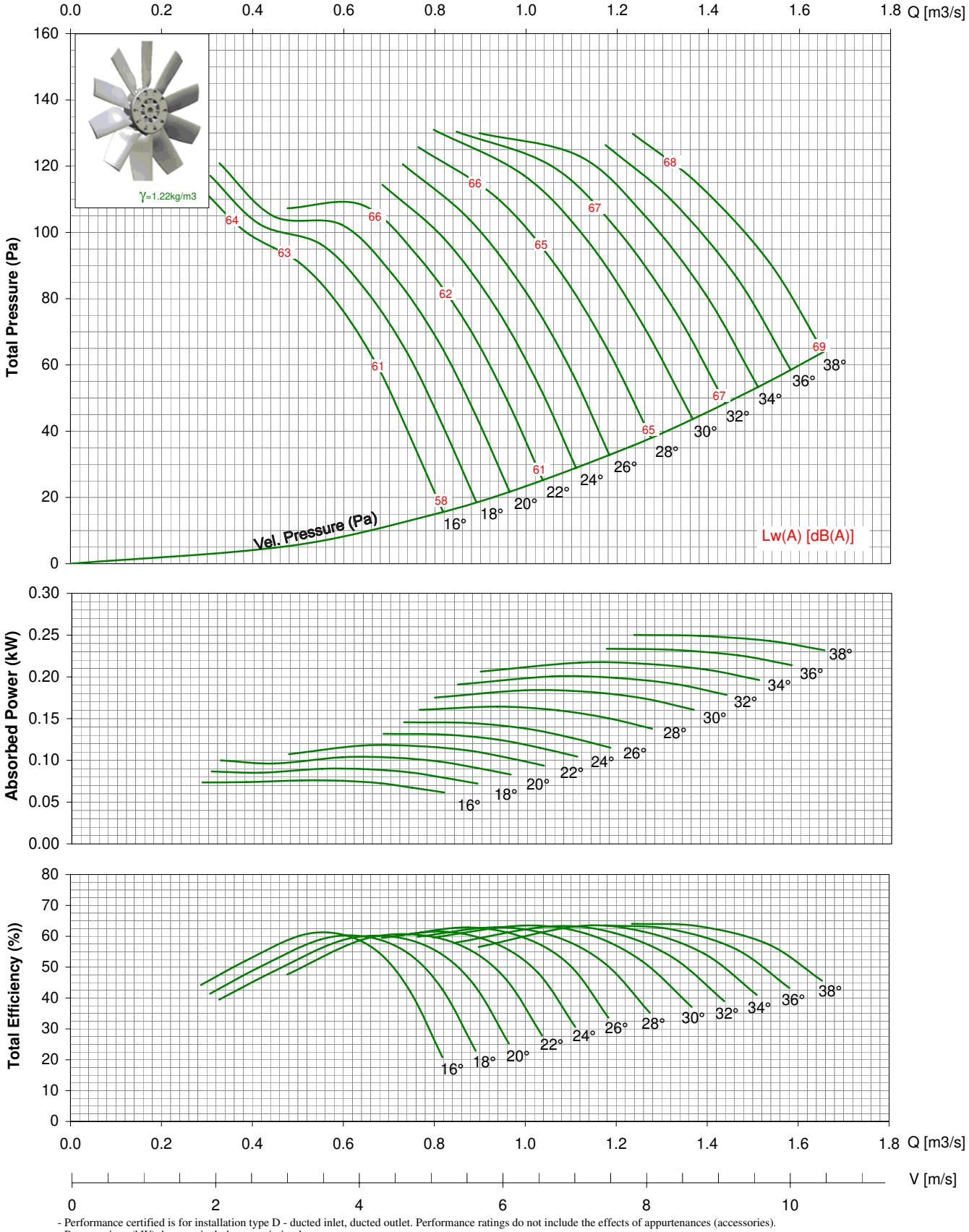

- Performance certified is for installation type D - ducted inlet, ducted outlet. Performance ratings do not include the effects of appurtenances (accessories).
- Power ratings (kW) does not include transmission losses.
- The A-weighted sound ratings shown have been calculated per AMCA Standard 301. Values shown are for inlet Lwi(A) sound power level for installation type D - ducted inlet, ducted outlet, rating include the effect of duct end correction.
- The AMCA Certified Ratings Seal applies to air performance only. dBA levels are not licensed by AMCA International.

TDA 450-V / 12AA/ 5-5/ _ _ / _
1750rpm - 60Hz

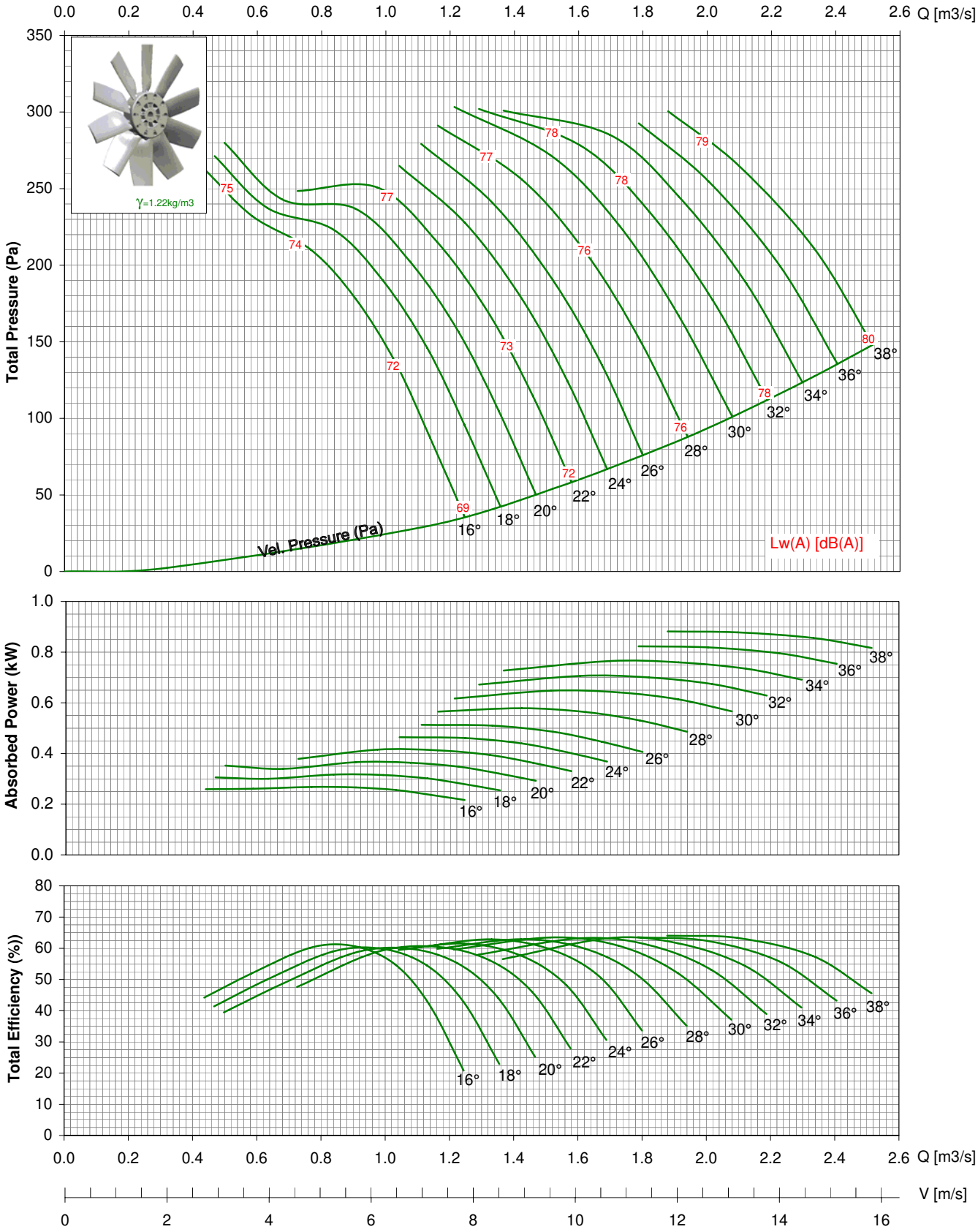

- Performance certified is for installation type D - ducted inlet, ducted outlet. Performance ratings do not include the effects of appurtenances (accessories).
- Power ratings (kW) does not include transmission losses.
- The A-weighted sound ratings shown have been calculated per AMCA Standard 301. Values shown are for inlet Lwi(A) sound power level for installation type D - ducted inlet, ducted outlet, rating include the effect of duct end correction.
- The AMCA Certified Ratings Seal applies to air performance only. dBA levels are not licensed by AMCA International.

TDA 450-V / 12AA/ 5-5/ _ _ / _
3450rpm - 60Hz

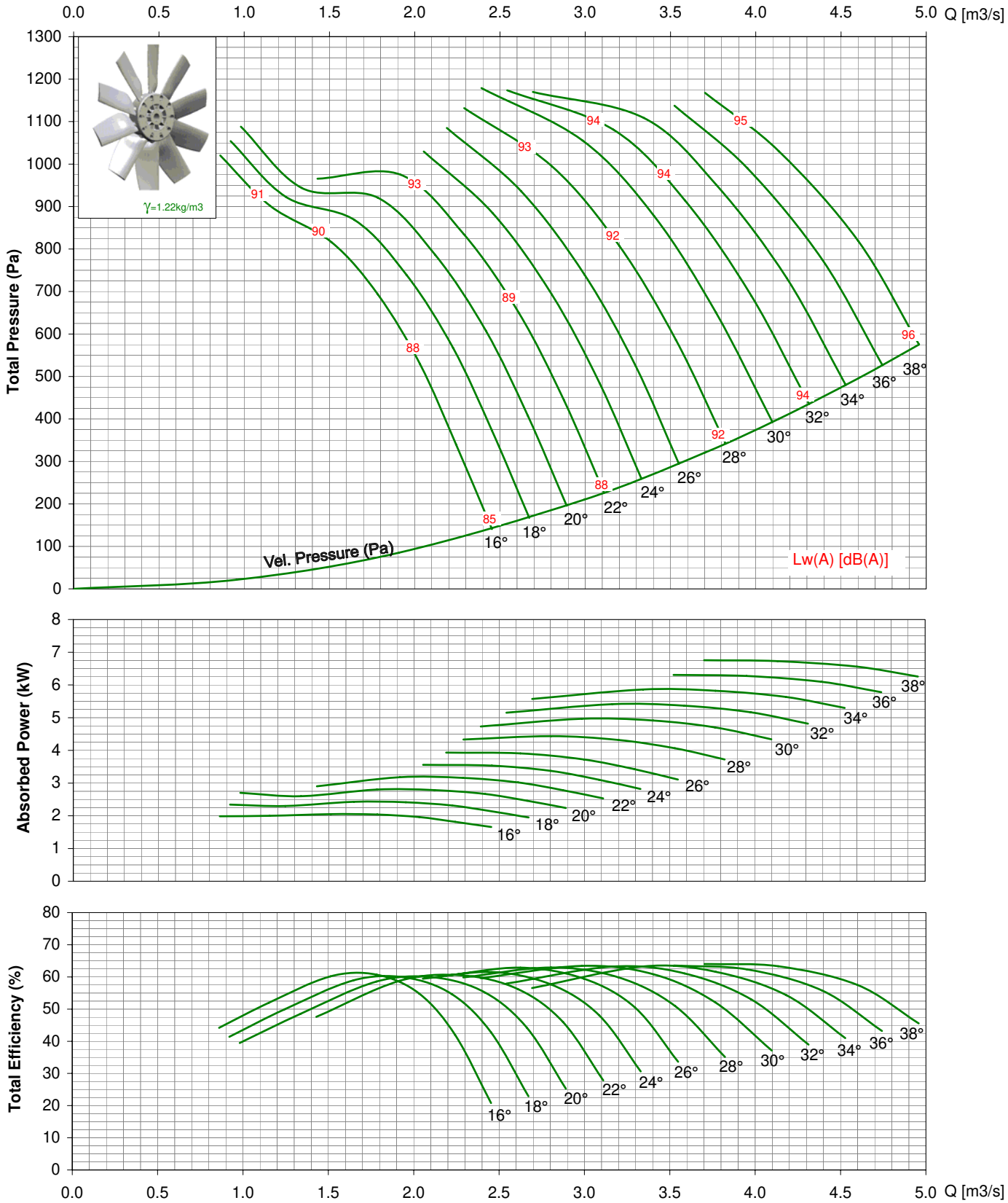

- Performance certified is for installation type D - ducted inlet, ducted outlet. Performance ratings do not include the effects of appurtenances (accessories).
- Power ratings (kW) does not include transmission losses.
- The A-weighted sound ratings shown have been calculated per AMCA Standard 301. Values shown are for inlet Lwi(A) sound power level for installation type D - ducted inlet, ducted outlet, rating include the effect of duct end correction.
- The AMCA Certified Ratings Seal applies to air performance only. dBA levels are not licensed by AMCA International.

VANE AXIAL FAN DIRECT DRIVEN



Kruger Ventilation (Taiwan) Co., Ltd. certifies that the TDA 500 -V shown herein is licensed to bear the AMCA Seal. The ratings shown are based on tests and procedures performed in accordance with AMCA publication 211 and comply with the requirements of the AMCA Certified Ratings Program.

Series TDA-V

Features
For commercial and industrial applications where large volumes of air are required at moderate to high pressure, special designed integral straightening vanes, reduced turbulence, provide high performance and low sound level.

Construction
Double flanged casing is produced in mild steel or galvanised Steel, the impeller having manually adjustable pitch aerofoil blades is made of PPG, PAG or pressure-casted Aluminium.

Finish
Available in standard finishes of galvanisation or painting.

Operating Temperature
-20°C to +55°C

Motors
Totally enclosed Class 'F' motor, to a min. IP54 protection are fitted as standard. Standard motor up to 2.2kW are usually supplied on DOL starting, motor 3.0kW and above are star/delta starting.

Airflow Direction
Air flowing from impeller to motor is fitted as standard.

MODEL: TDA 500-V / 12AA / 9-9 /__/_ - __/__

- Motor no. of pole – 2, 4 or 6
- Motor Power kW
- Airflow direction – B
- Blade angle - 14°, 16°, 18°, 20°, 22°, 24°, 26°, 28°, 30°, 32°, 34°

* All Dimension in mm

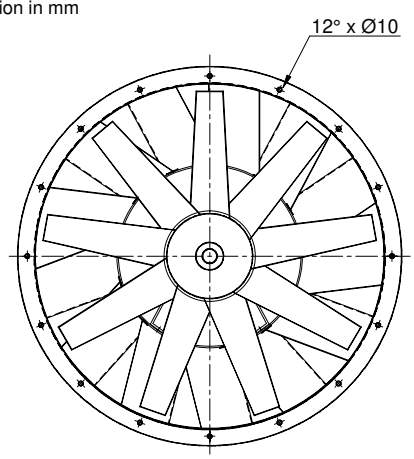

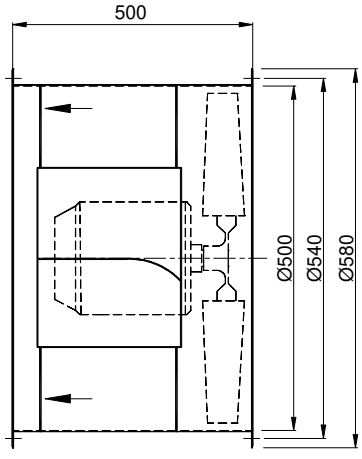

TDA 500-V / 12AA/ 9-9/ _ _ / _
950rpm - 50Hz

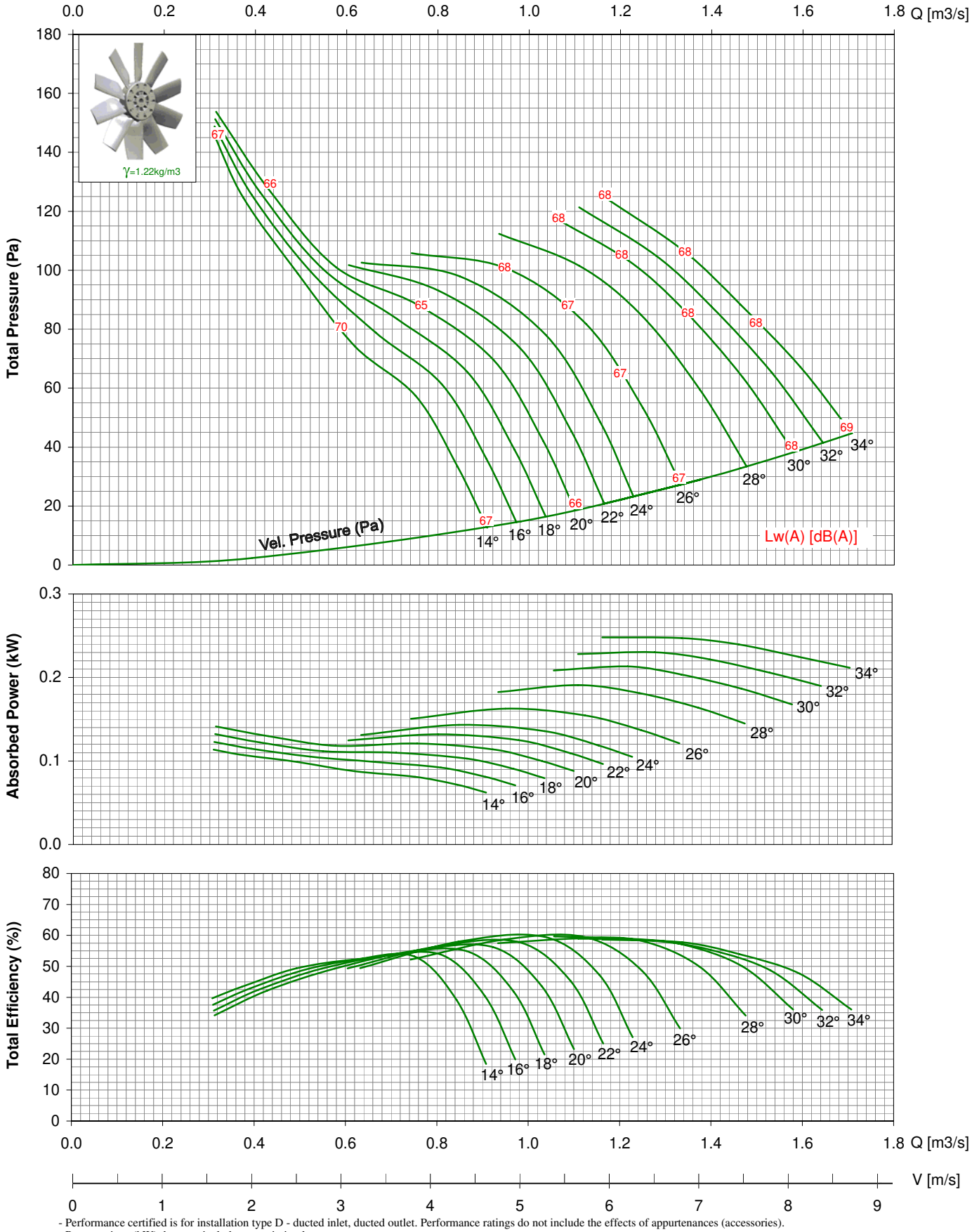

- Performance certified is for installation type D - ducted inlet, ducted outlet. Performance ratings do not include the effects of appurtenances (accessories).
- Power ratings (kW) does not include transmission losses.
- The A-weighted sound ratings shown have been calculated per AMCA Standard 301. Values shown are for inlet Lwi(A) sound power level for installation type D - ducted inlet, ducted outlet, rating include the effect of duct end correction.
- The AMCA Certified Ratings Seal applies to air performance only. dBA levels are not licensed by AMCA international.

TDA 500-V / 12AA/ 9-9/ _ _ / _
1450rpm - 50Hz

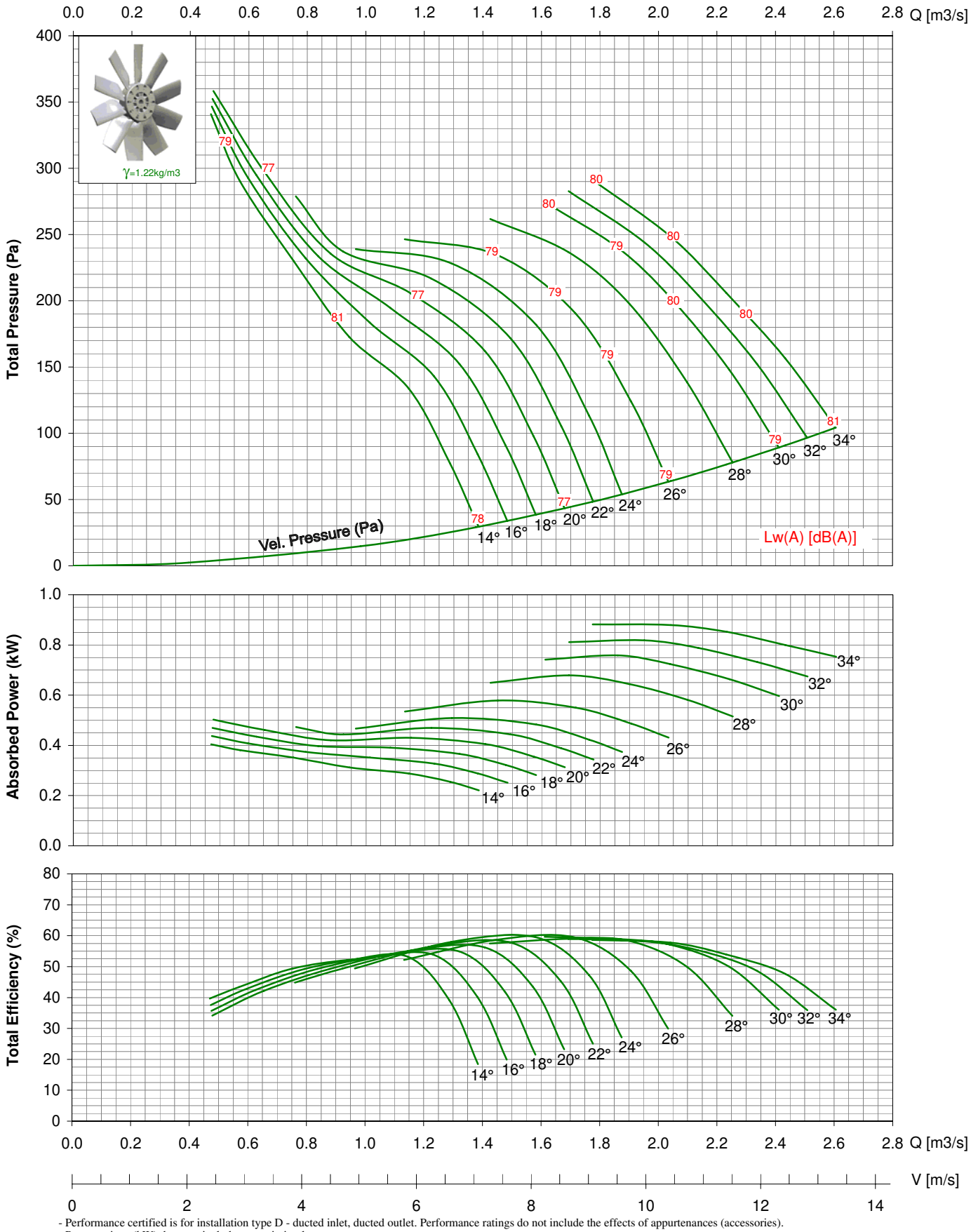

- Performance certified is for installation type D - ducted inlet, ducted outlet. Performance ratings do not include the effects of appurtenances (accessories).
- Power ratings (kW) does not include transmission losses.
- The A-weighted sound ratings shown have been calculated per AMCA Standard 301. Values shown are for inlet Lwi(A) sound power level for installation type D - ducted inlet, ducted outlet, rating include the effect of duct end correction.
- The AMCA Certified Ratings Seal applies to air performance only. dBA levels are not licensed by AMCA international.

TDA 500-V / 12AA/ 9-9/ _ _ / _
2850rpm - 50Hz

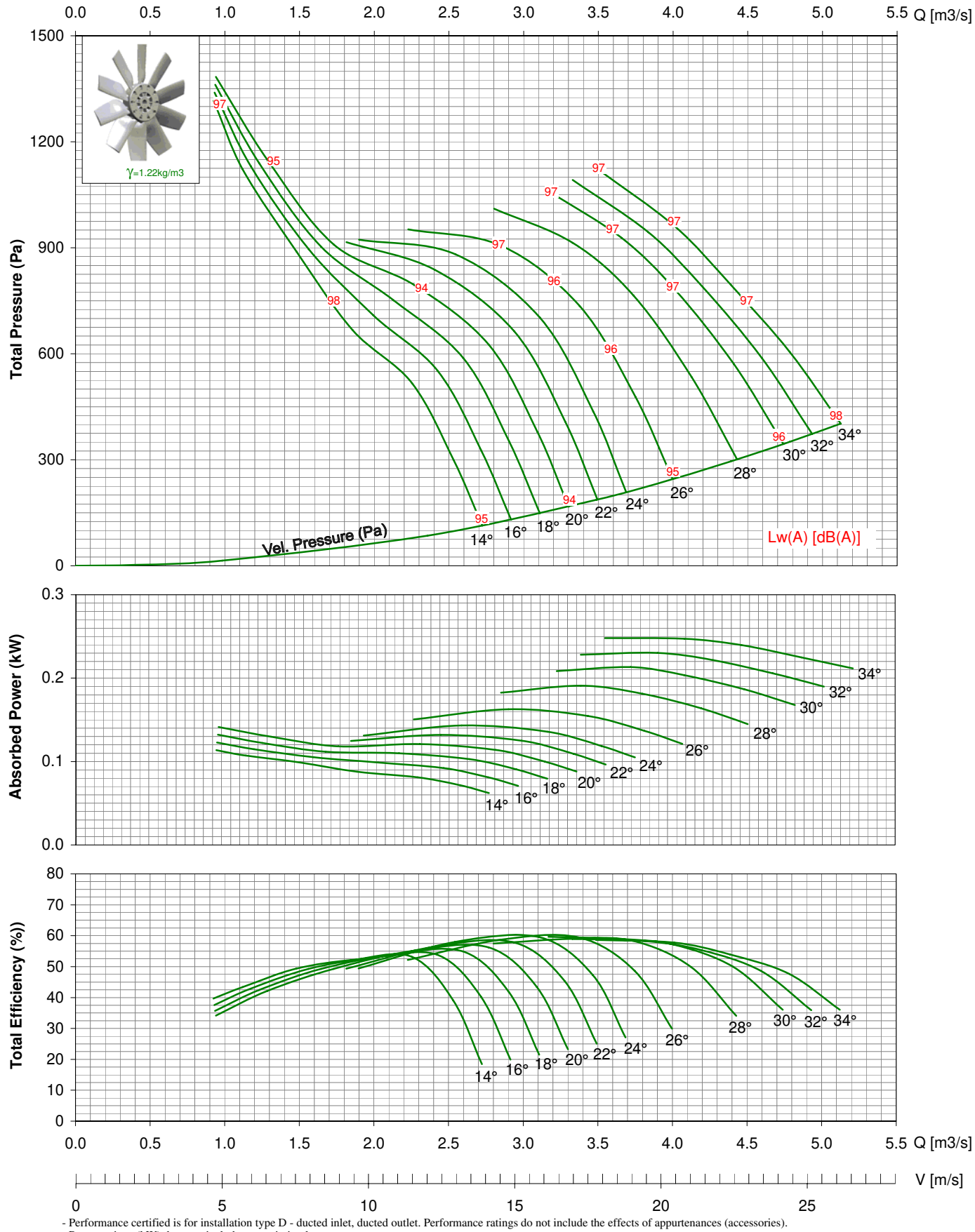

- Performance certified is for installation type D - ducted inlet, ducted outlet. Performance ratings do not include the effects of appurtenances (accessories).
- Power ratings (kW) does not include transmission losses.
- The A-weighted sound ratings shown have been calculated per AMCA Standard 301. Values shown are for inlet Lwi(A) sound power level for installation type D - ducted inlet, ducted outlet, rating include the effect of duct end correction.
- The AMCA Certified Ratings Seal applies to air performance only. dBA levels are not licensed by AMCA international.

TDA 500-V / 12AA/ 9-9/ _ _ / _
1150rpm - 60Hz

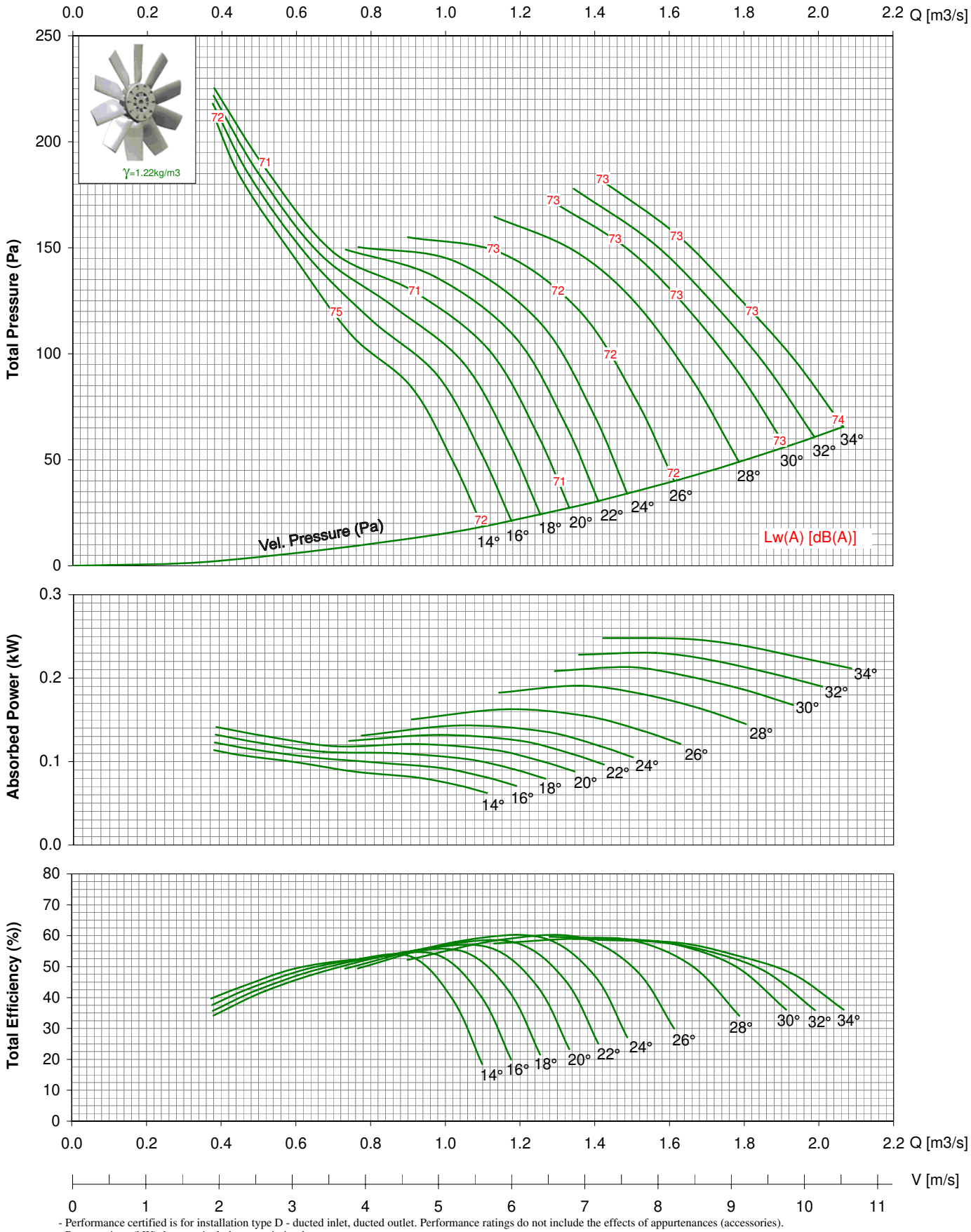

- Performance certified is for installation type D - ducted inlet, ducted outlet. Performance ratings do not include the effects of appurtenances (accessories).
- Power ratings (kW) does not include transmission losses.
- The A-weighted sound ratings shown have been calculated per AMCA Standard 301. Values shown are for inlet Lwi(A) sound power level for installation type D - ducted inlet, ducted outlet, rating include the effect of duct end correction.
- The AMCA Certified Ratings Seal applies to air performance only. dBA levels are not licensed by AMCA international.

TDA 500-V / 12AA/ 9-9/ _ _ / _
1750rpm - 60Hz

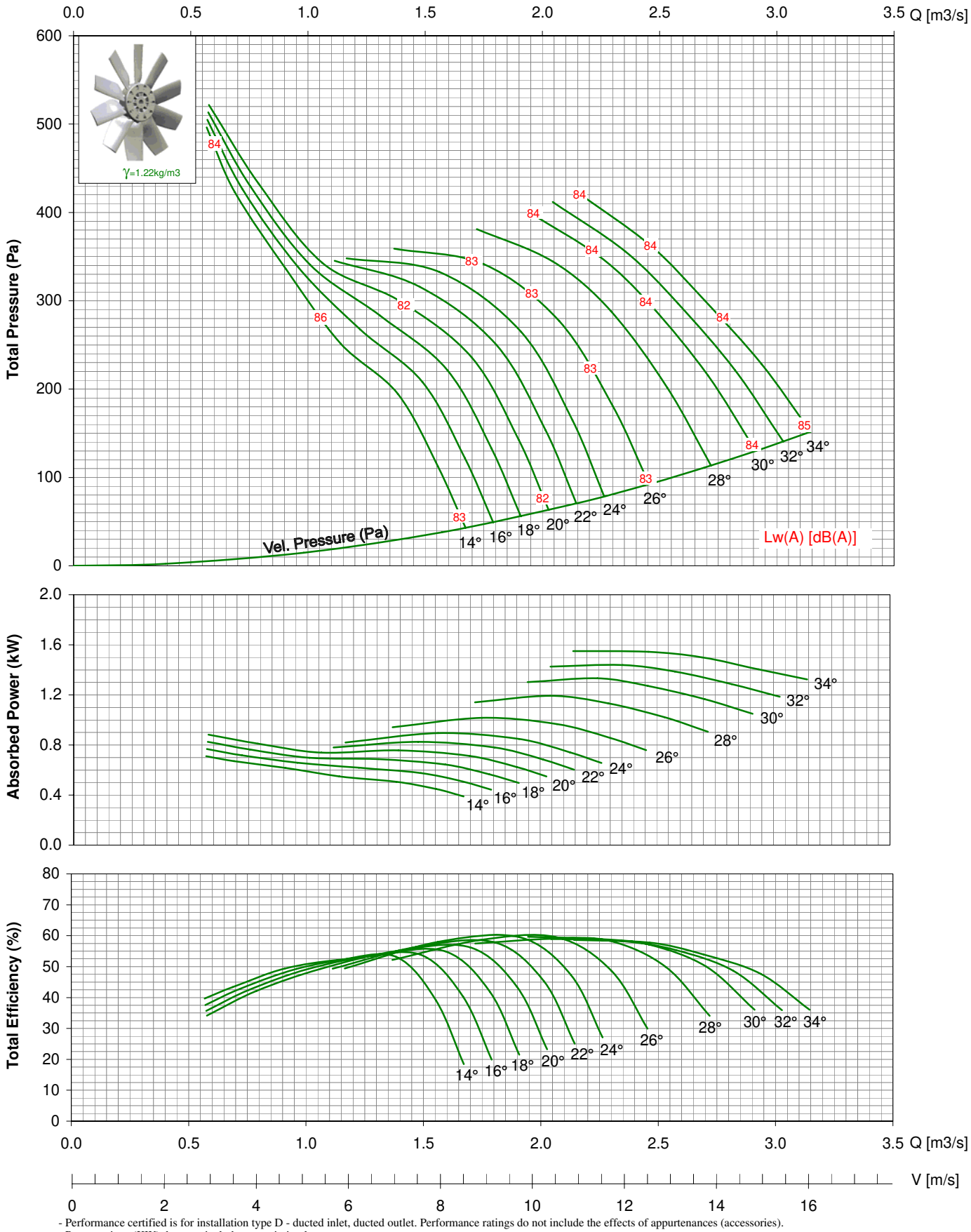

- Performance certified is for installation type D - ducted inlet, ducted outlet. Performance ratings do not include the effects of appurtenances (accessories).
- Power ratings (KW) does not include transmission losses.
- The A-weighted sound ratings shown have been calculated per AMCA Standard 301. Values shown are for inlet Lwi(A) sound power level for installation type D - ducted inlet, ducted outlet, rating include the effect of duct end correction.
- The AMCA Certified Ratings Seal applies to air performance only. dBA levels are not licensed by AMCA international.

VANE AXIAL FAN DIRECT DRIVEN



Kruger Ventilation (Taiwan) Co., Ltd. certifies that the TDA 560 -V shown herein is licensed to bear the AMCA Seal. The ratings shown are based on tests and procedures performed in accordance with AMCA publication 211 and comply with the requirements of the AMCA Certified Ratings Program.

Series TDA-V

Features
For commercial and industrial applications where large volumes of air are required at moderate to high pressure, special designed integral straightening vanes, reduced turbulence, provide high performance and low sound level.

Construction
Double flanged casing is produced in mild steel or galvanised Steel, the impeller having manually adjustable pitch aerofoil blades is made of PPG, PAG or pressure-casted Aluminium.

Finish
Available in standard finishes of galvanisation or painting.

Operating Temperature
-20°C to +55°C

Motors
Totally enclosed Class 'F' motor, to a min. IP54 protection are fitted as standard. Standard motor up to 2.2kW are usually supplied on DOL starting, motor 3.0kW and above are star/delta starting.

Airflow Direction
Air flowing from impeller to motor is fitted as standard.

MODEL: TDA 560-V / 12AA / 9-9 /__/_ - __/__

- Motor no. of pole – 2, 4 or 6
- Motor Power kW
- Airflow direction – B
- Blade angle - 12°, 14°, 16°, 18°, 20°, 22°, 24°, 26°, 28°, 30°, 32°

* All Dimension in mm

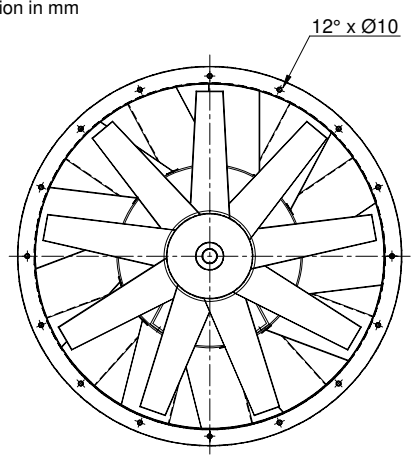

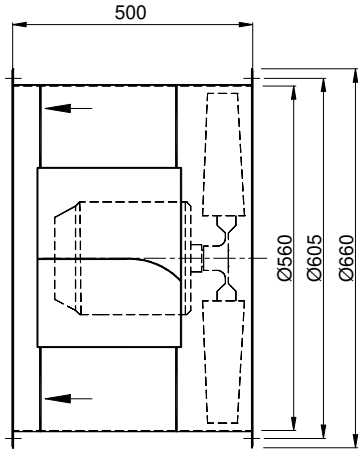

TDA 560-V / 12AA/ 9-9/ _ _ / _
950rpm - 50Hz

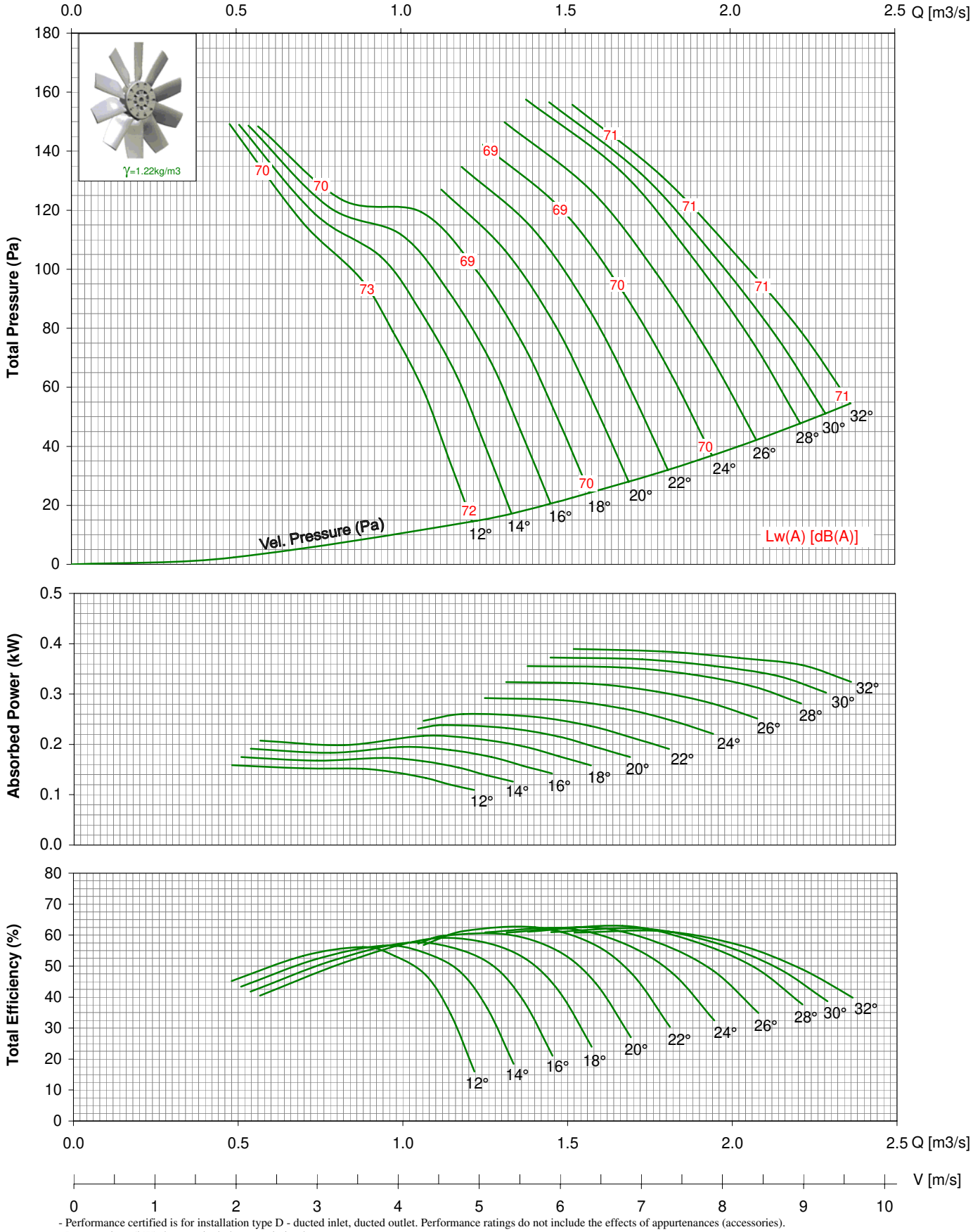

- Performance certified is for installation type D - ducted inlet, ducted outlet. Performance ratings do not include the effects of appurtenances (accessories).
- Power ratings (kW) does not include transmission losses.
- The A-weighted sound ratings shown have been calculated per AMCA Standard 301. Values shown are for inlet Lwi(A) sound power level for installation type D - ducted inlet, ducted outlet, rating include the effect of duct end correction.
- The AMCA Certified Ratings Seal applies to air performance only. dBA levels are not licensed by AMCA international.

TDA 560-V / 12AA/ 9-9/ _ _ / _
1450rpm - 50Hz

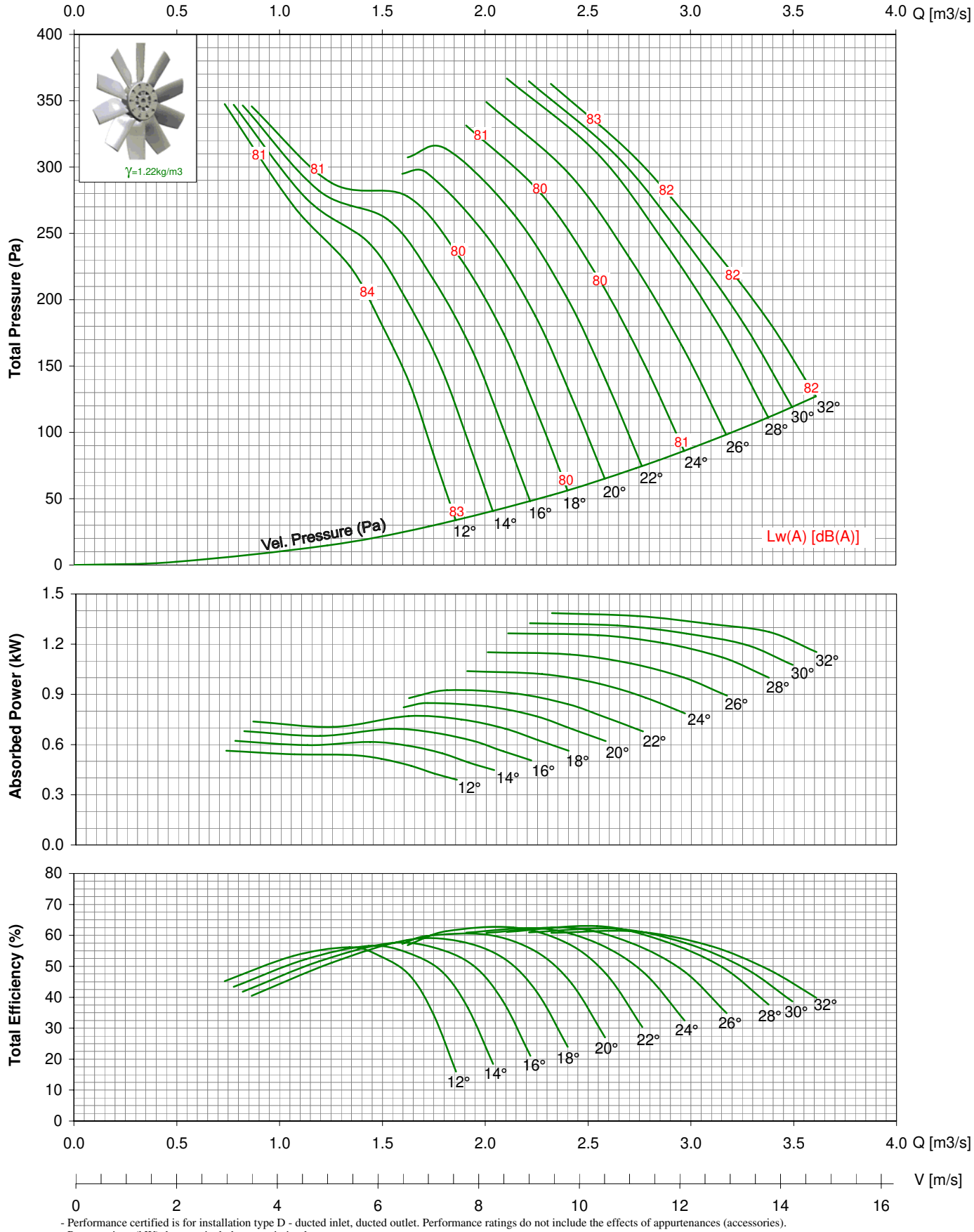

- Performance certified is for installation type D - ducted inlet, ducted outlet. Performance ratings do not include the effects of appurtenances (accessories).
- Power ratings (kW) does not include transmission losses.
- The A-weighted sound ratings shown have been calculated per AMCA Standard 301. Values shown are for inlet Lwi(A) sound power level for installation type D - ducted inlet, ducted outlet, rating include the effect of duct end correction.
- The AMCA Certified Ratings Seal applies to air performance only. dBA levels are not licensed by AMCA international.

TDA 560-V / 12AA/ 9-9/ _ _ / _
2850rpm - 50Hz

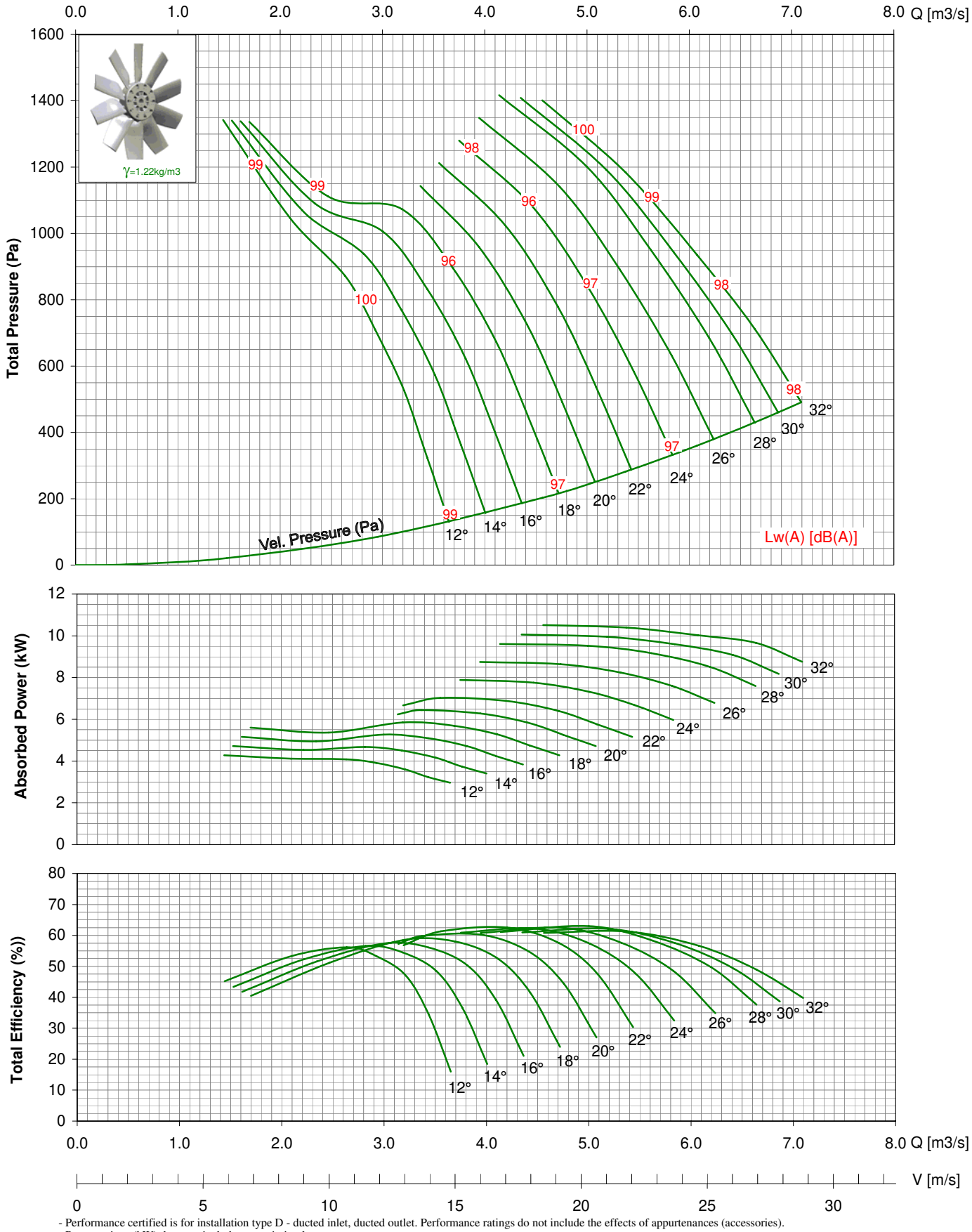

- Performance certified is for installation type D - ducted inlet, ducted outlet. Performance ratings do not include the effects of appurtenances (accessories).
- Power ratings (kW) does not include transmission losses.
- The A-weighted sound ratings shown have been calculated per AMCA Standard 301. Values shown are for inlet Lwi(A) sound power level for installation type D - ducted inlet, ducted outlet, rating include the effect of duct end correction.
- The AMCA Certified Ratings Seal applies to air performance only. dBA levels are not licensed by AMCA international.

TDA 560-V / 12AA/ 9-9/ _ _ / _
1150rpm - 60Hz

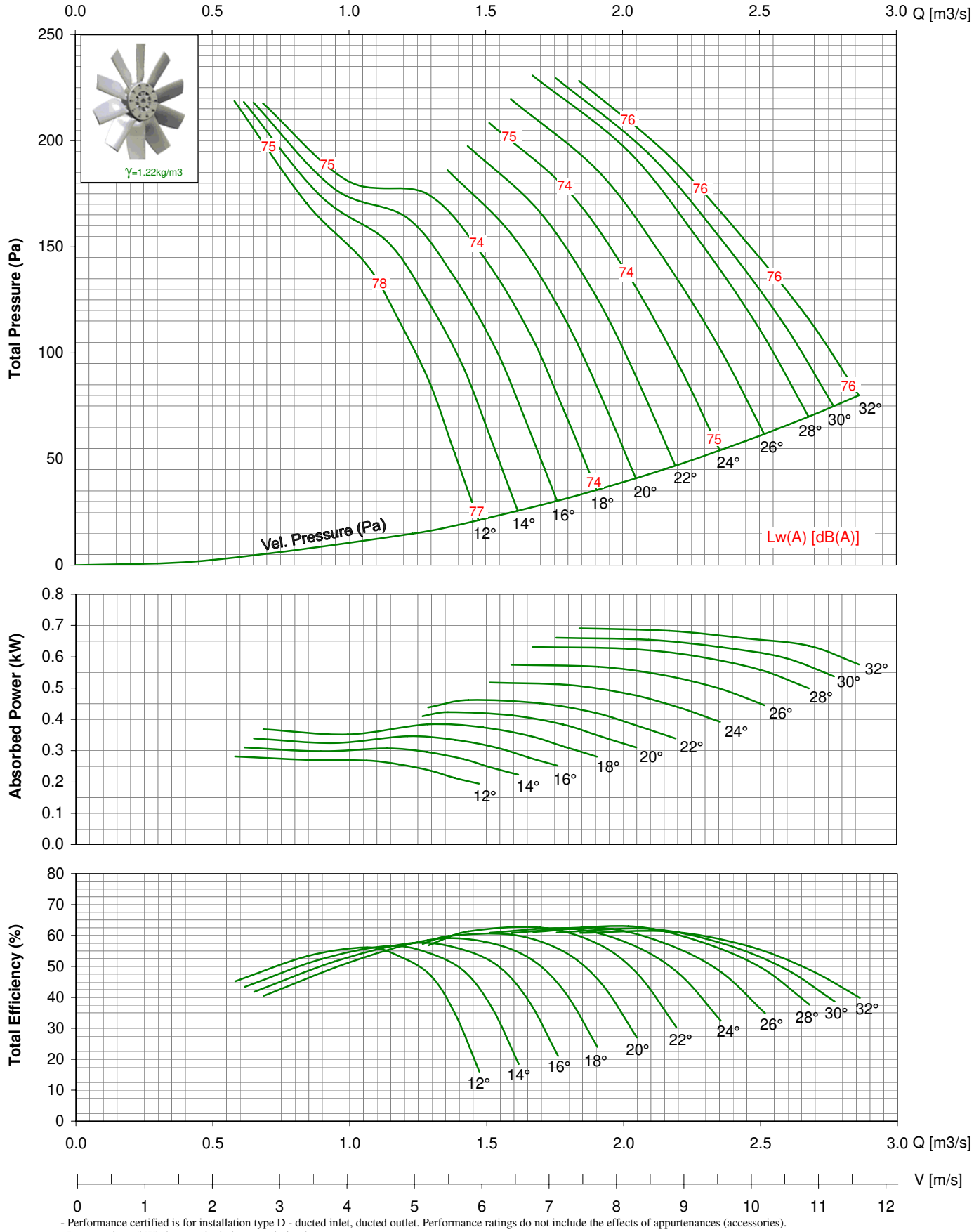

- Performance certified is for installation type D - ducted inlet, ducted outlet. Performance ratings do not include the effects of appurtenances (accessories).
- Power ratings (kW) does not include transmission losses.
- The A-weighted sound ratings shown have been calculated per AMCA Standard 301. Values shown are for inlet Lwi(A) sound power level for installation type D - ducted inlet, ducted outlet, rating include the effect of duct end correction.
- The AMCA Certified Ratings Seal applies to air performance only. dBA levels are not licensed by AMCA international.

TDA 560-V / 12AA/ 9-9/ _ _ / _
1750rpm - 60Hz

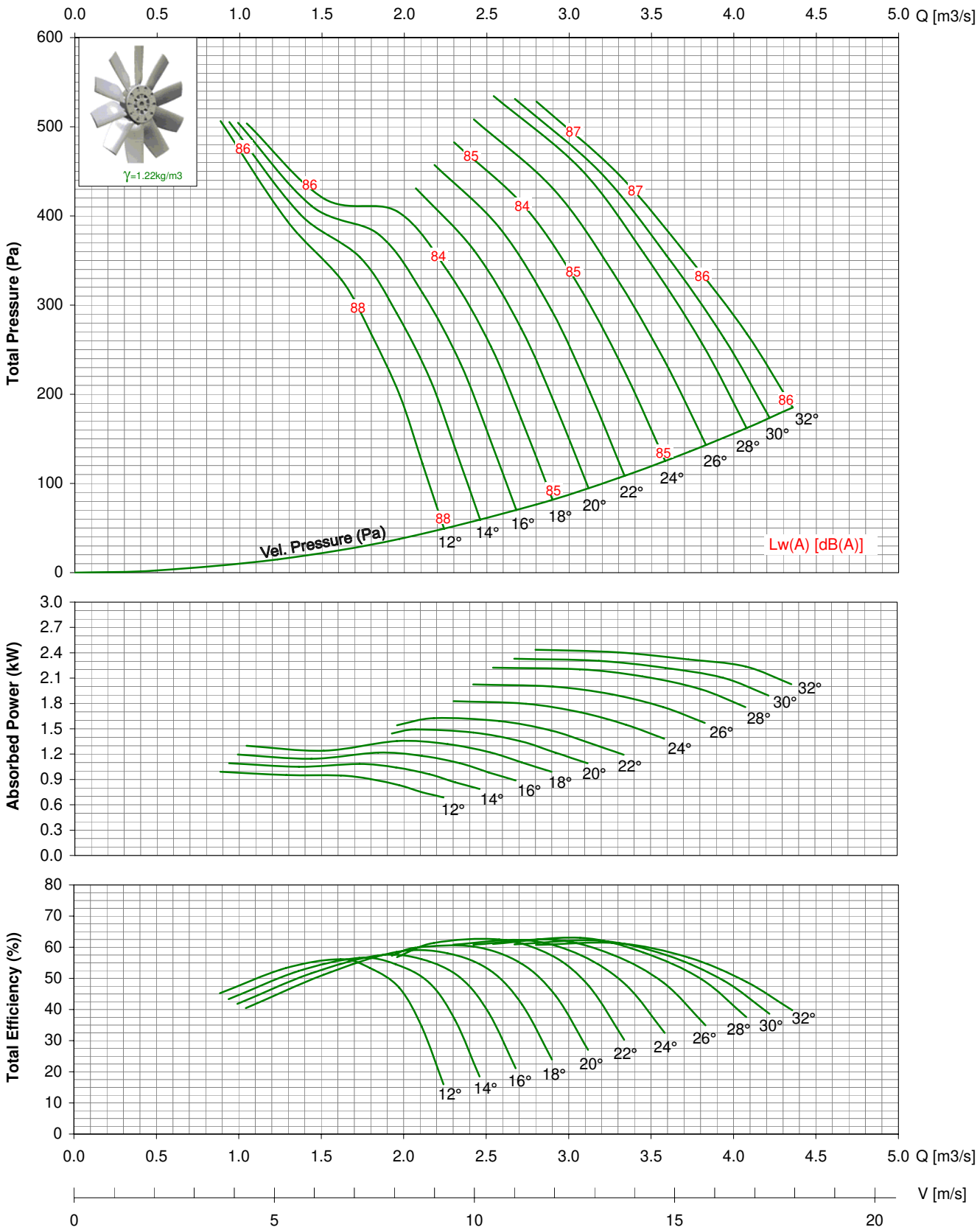

- Performance certified is for installation type D - ducted inlet, ducted outlet. Performance ratings do not include the effects of appurtenances (accessories).
- Power ratings (kW) does not include transmission losses.
- The A-weighted sound ratings shown have been calculated per AMCA Standard 301. Values shown are for inlet Lwi(A) sound power level for installation type D - ducted inlet, ducted outlet, rating include the effect of duct end correction.
- The AMCA Certified Ratings Seal applies to air performance only. dBA levels are not licensed by AMCA international.

VANE AXIAL FAN DIRECT DRIVEN



Series TDA-V

Features
For commercial and industrial applications where large volumes of air are required at moderate to high pressure, special designed integral straightening vanes, reduced turbulence, provide high performance and low sound level.

Construction
Double flanged casing is produced in mild steel or galvanised Steel, the impeller having manually adjustable pitch aerofoil blades is made of PPG, PAG or pressure-casted Aluminium.

Finish
Available in standard finishes of galvanisation or painting.

Operating Temperature
-20°C to +55°C

Motors
Totally enclosed Class 'F' motor, to a min. IP54 protection are fitted as standard. Standard motor up to 2.2kW are usually supplied on DOL starting, motor 3.0kW and above are star/delta starting.

Airflow Direction
Air flowing from impeller to motor is fitted as standard.

Kruger Ventilation (Taiwan) Co., Ltd. certifies that the TDA 630 -V shown herein is licensed to bear the AMCA Seal. The ratings shown are based on tests and procedures performed in accordance with AMCA publication 211 and comply with the requirements of the AMCA Certified Ratings Program.

MODEL: TDA 630-V / 12AA / 12-12 /__/_ - __/__

- Motor no. of pole – 4 or 6
- Motor Power kW
- Airflow direction – B
- Blade angle - 8°, 10°, 12°, 14°, 16°, 18°, 20°, 22°, 24°, 26°, 28°, 30°, 32°, 34°, 36°, 38°, 40°

* All Dimension in mm

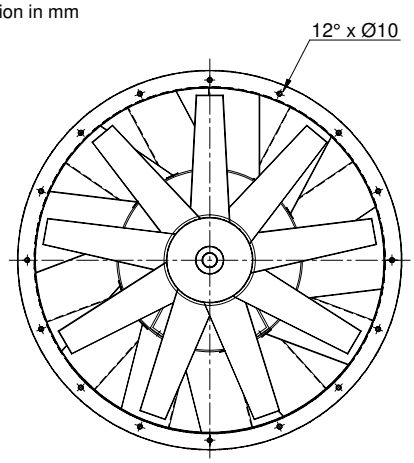

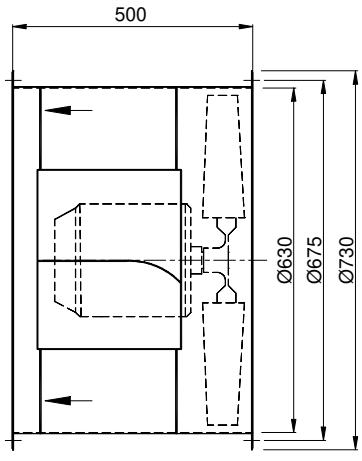

TDA 630-V / 12AA/ 12-12/ _ _ / _
950rpm - 50Hz

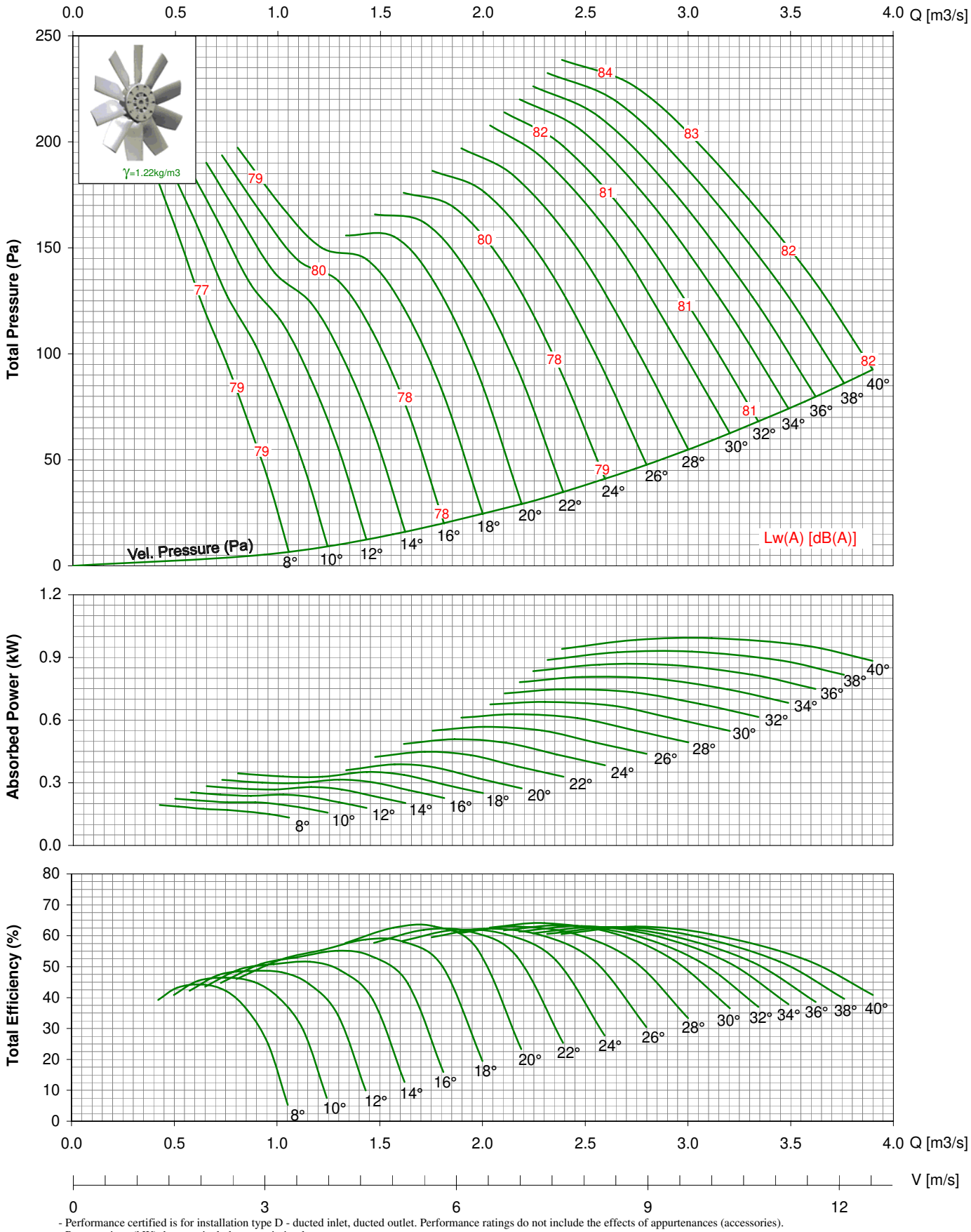

- Performance certified is for installation type D - ducted inlet, ducted outlet. Performance ratings do not include the effects of appurtenances (accessories).
- Power ratings (kW) does not include transmission losses.
- The A-weighted sound ratings shown have been calculated per AMCA Standard 301. Values shown are for inlet Lwi(A) sound power level for installation type D - ducted inlet, ducted outlet, rating include the effect of duct end correction.
- The AMCA Certified Ratings Seal applies to air performance only. dBA levels are not licensed by AMCA international.

TDA 630-V / 12AA/ 12-12/ _ _ / _
1450rpm - 50Hz

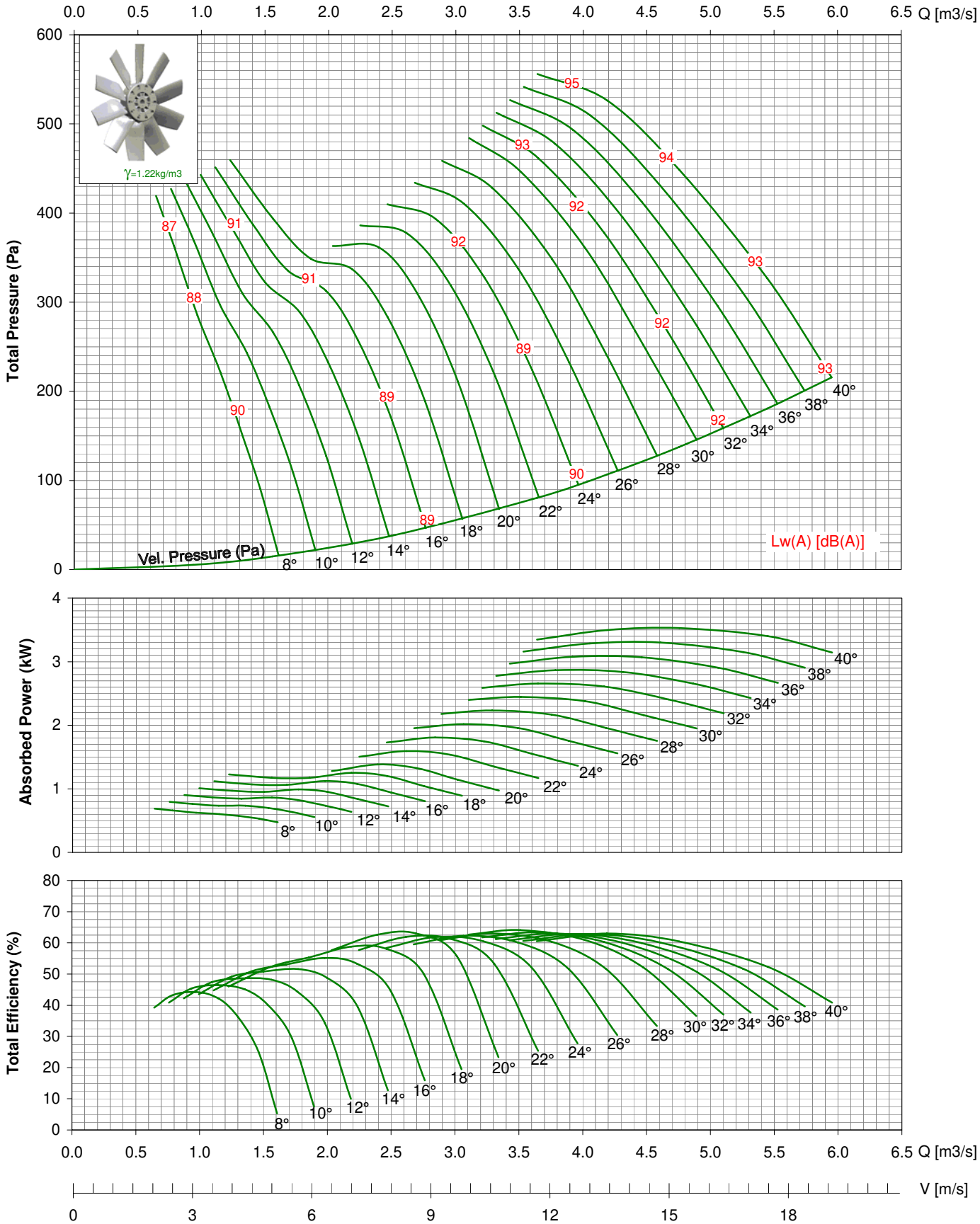

- Performance certified is for installation type D - ducted inlet, ducted outlet. Performance ratings do not include the effects of appurtenances (accessories).
- Power ratings (kW) does not include transmission losses.
- The A-weighted sound ratings shown have been calculated per AMCA Standard 301. Values shown are for inlet Lwi(A) sound power level for installation type D - ducted inlet, ducted outlet, rating include the effect of duct end correction.
- The AMCA Certified Ratings Seal applies to air performance only. dBA levels are not licensed by AMCA international.

TDA 630-V / 12AA/ 12-12/ _ _ / _
1150rpm - 60Hz

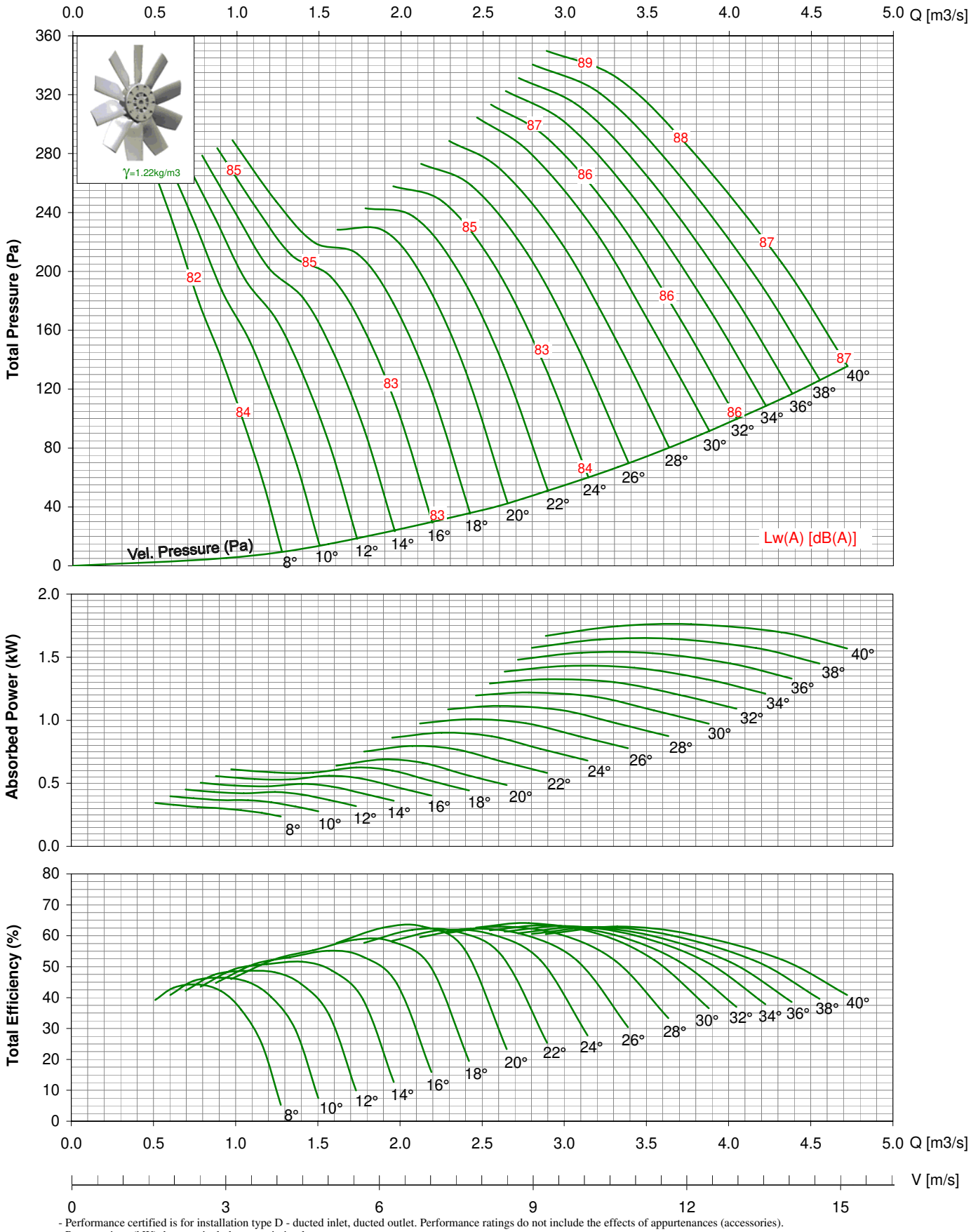

- Performance certified is for installation type D - ducted inlet, ducted outlet. Performance ratings do not include the effects of appurtenances (accessories).
- Power ratings (kW) does not include transmission losses.
- The A-weighted sound ratings shown have been calculated per AMCA Standard 301. Values shown are for inlet Lwi(A) sound power level for installation type D - ducted inlet, ducted outlet, rating include the effect of duct end correction.
- The AMCA Certified Ratings Seal applies to air performance only. dBA levels are not licensed by AMCA international.

TDA 630-V / 12AA/ 12-12/ _ _ / _
1750rpm - 60Hz

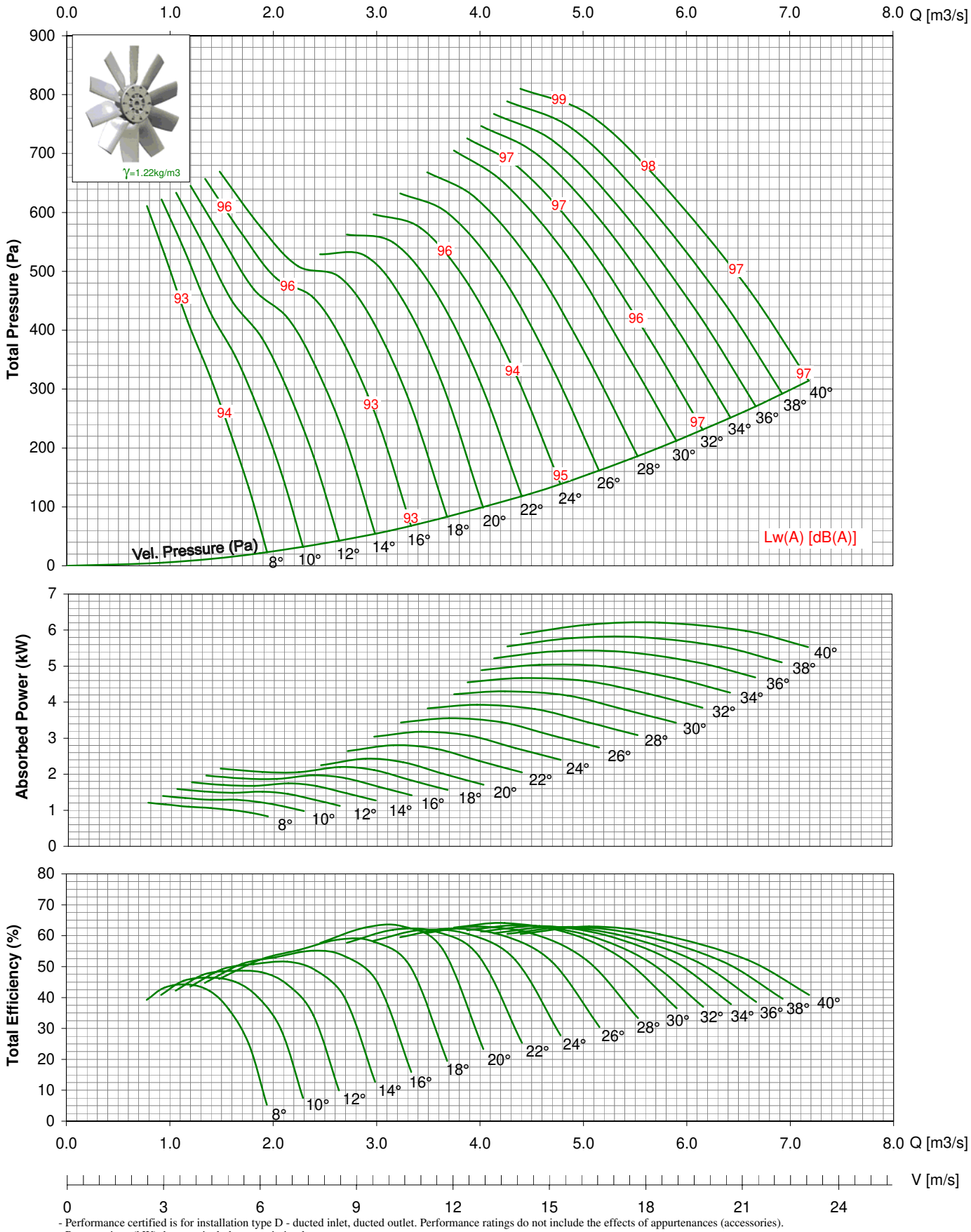

- Performance certified is for installation type D - ducted inlet, ducted outlet. Performance ratings do not include the effects of appurtenances (accessories).
- Power ratings (kW) does not include transmission losses.
- The A-weighted sound ratings shown have been calculated per AMCA Standard 301. Values shown are for inlet Lwi(A) sound power level for installation type D - ducted inlet, ducted outlet, rating include the effect of duct end correction.
- The AMCA Certified Ratings Seal applies to air performance only. dBA levels are not licensed by AMCA international.

VANE AXIAL FAN DIRECT DRIVEN



Series TDA-V

Features
For commercial and industrial applications where large volumes of air are required at moderate to high pressure, special designed integral straightening vanes, reduced turbulence, provide high performance and low sound level.

Construction
Double flanged casing is produced in mild steel or galvanised Steel, the impeller having manually adjustable pitch aerofoil blades is made of PPG, PAG or pressure-casted Aluminium.

Finish
Available in standard finishes of galvanisation or painting.

Operating Temperature
-20°C to +55°C

Motors
Totally enclosed Class 'F' motor, to a min. IP54 protection are fitted as standard. Standard motor up to 2.2kW are usually supplied on DOL starting, motor 3.0kW and above are star/delta starting.

Airflow Direction
Air flowing from impeller to motor is fitted as standard.

Kruger Ventilation (Taiwan) Co., Ltd. certifies that the TDA 710 -V shown herein is licensed to bear the AMCA Seal. The ratings shown are based on tests and procedures performed in accordance with AMCA publication 211 and comply with the requirements of the AMCA Certified Ratings Program.

MODEL: TDA 710-V / 14AA / 12-12 /__/_ - __/__

- Motor no. of pole – 4 or 6
- Motor Power kW
- Airflow direction – B
- Blade angle - 16°, 18°, 20°, 22°, 24°, 26°, 28°, 30°, 32°, 34°, 36°, 38°, 40°

* All Dimension in mm

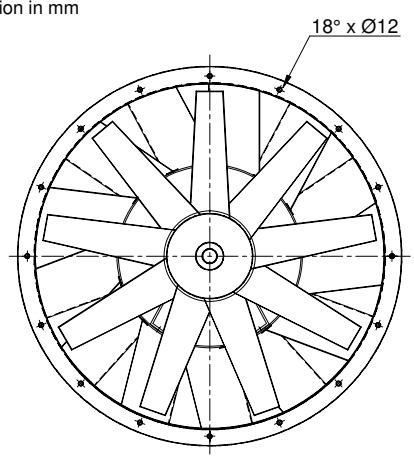

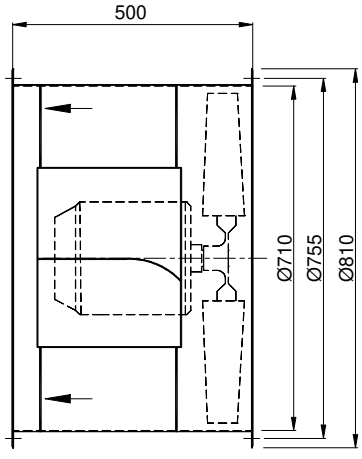

TDA 710-V / 14AA/ 12-12/ _ _ / _
950rpm - 50Hz

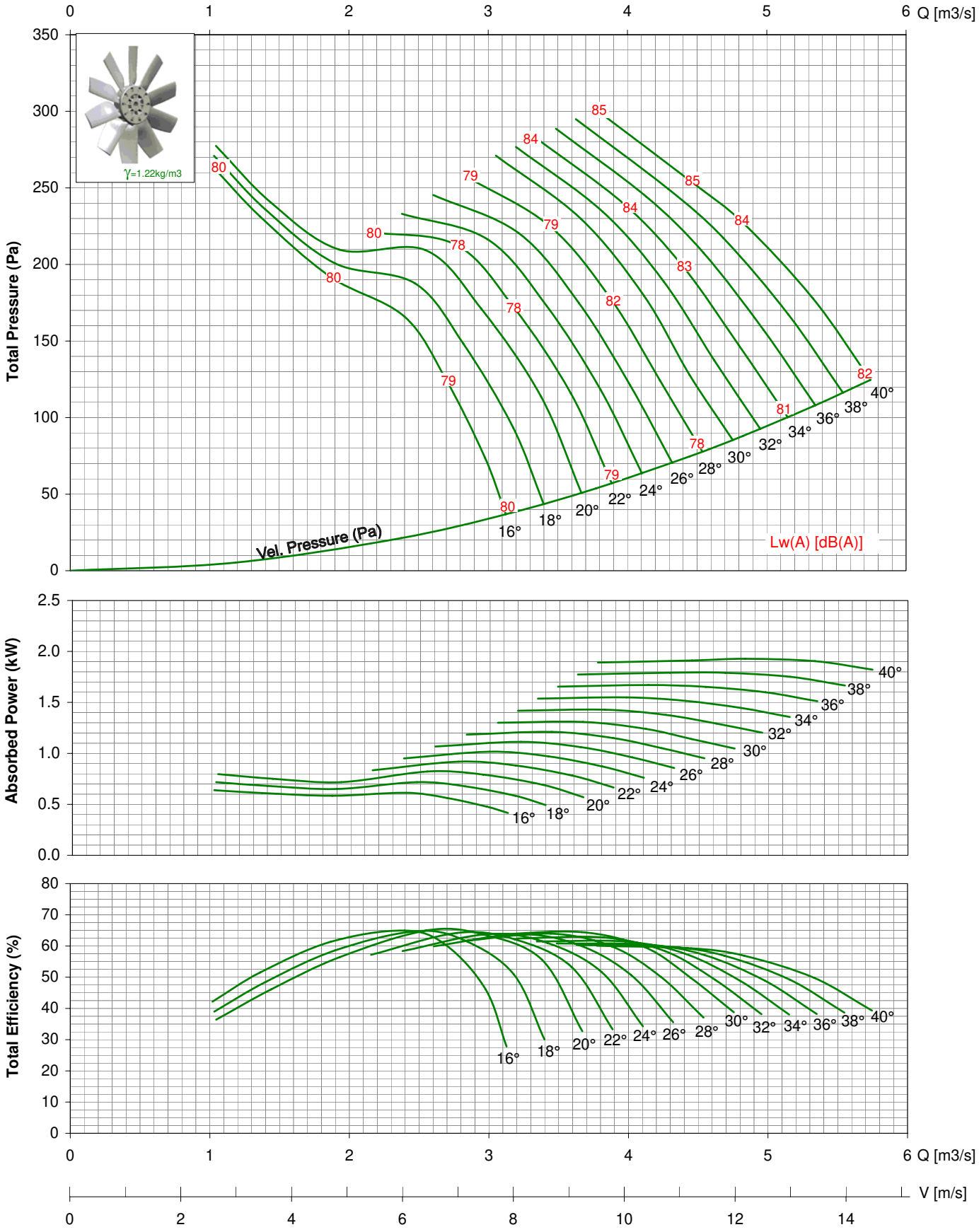

- Performance certified is for installation type D - ducted inlet, ducted outlet. Performance ratings do not include the effects of appurtenances (accessories).
- Power ratings (kW) does not include transmission losses.
- The A-weighted sound ratings shown have been calculated per AMCA Standard 301. Values shown are for inlet Lwi(A) sound power level for installation type D - ducted inlet, ducted outlet, rating include the effect of duct end correction.
- The AMCA Certified Ratings Seal applies to air performance only. dBA levels are not licensed by AMCA international.

TDA 710-V / 14AA/ 12-12/ _ _ / _
1450rpm - 50Hz

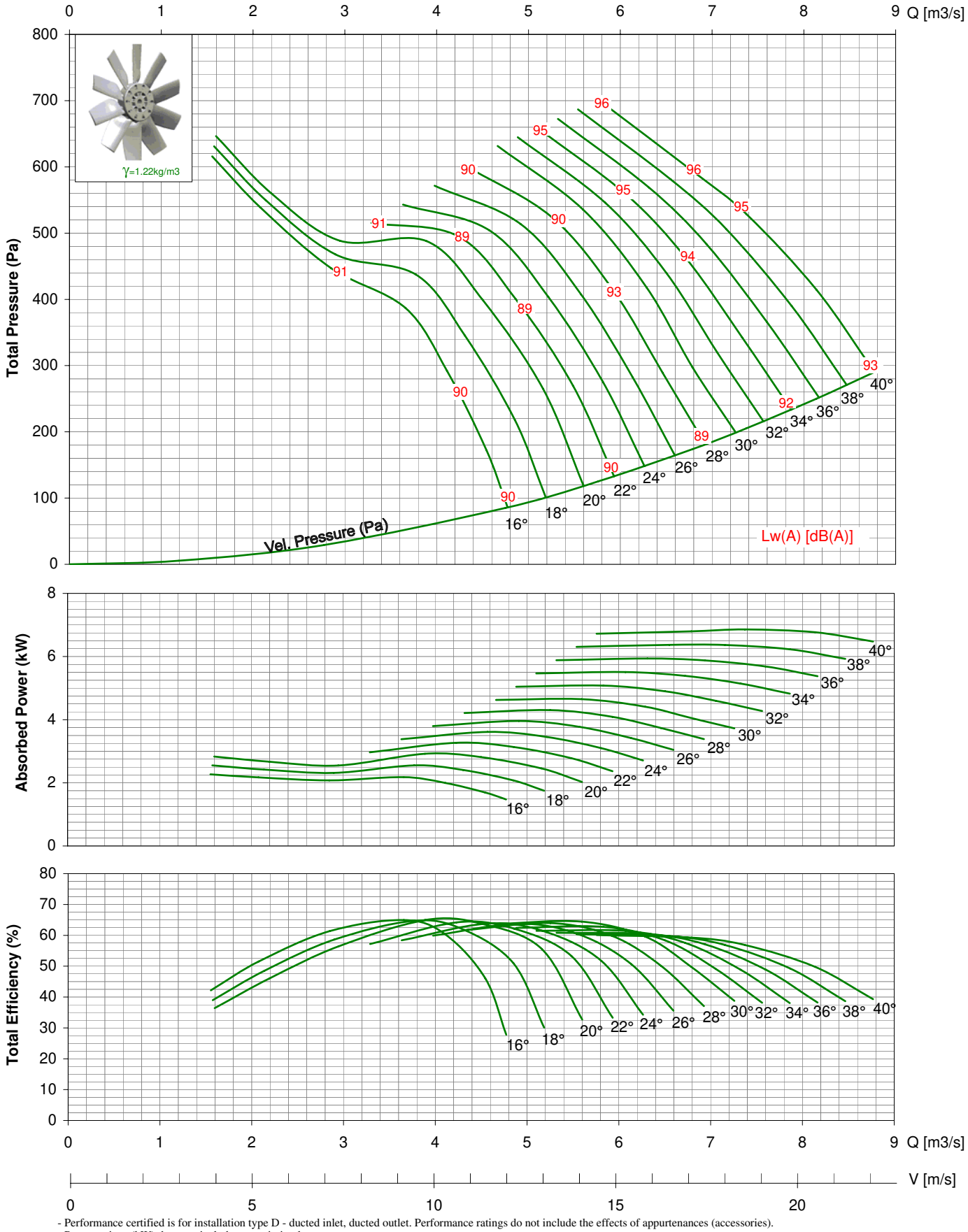

- Performance certified is for installation type D - ducted inlet, ducted outlet. Performance ratings do not include the effects of appurtenances (accessories).
- Power ratings (kW) does not include transmission losses.
- The A-weighted sound ratings shown have been calculated per AMCA Standard 301. Values shown are for inlet Lwi(A) sound power level for installation type D - ducted inlet, ducted outlet, rating include the effect of duct end correction.
- The AMCA Certified Ratings Seal applies to air performance only. dBA levels are not licensed by AMCA international.

TDA 710-V / 14AA/ 12-12/ _ _ / _
1150rpm - 60Hz

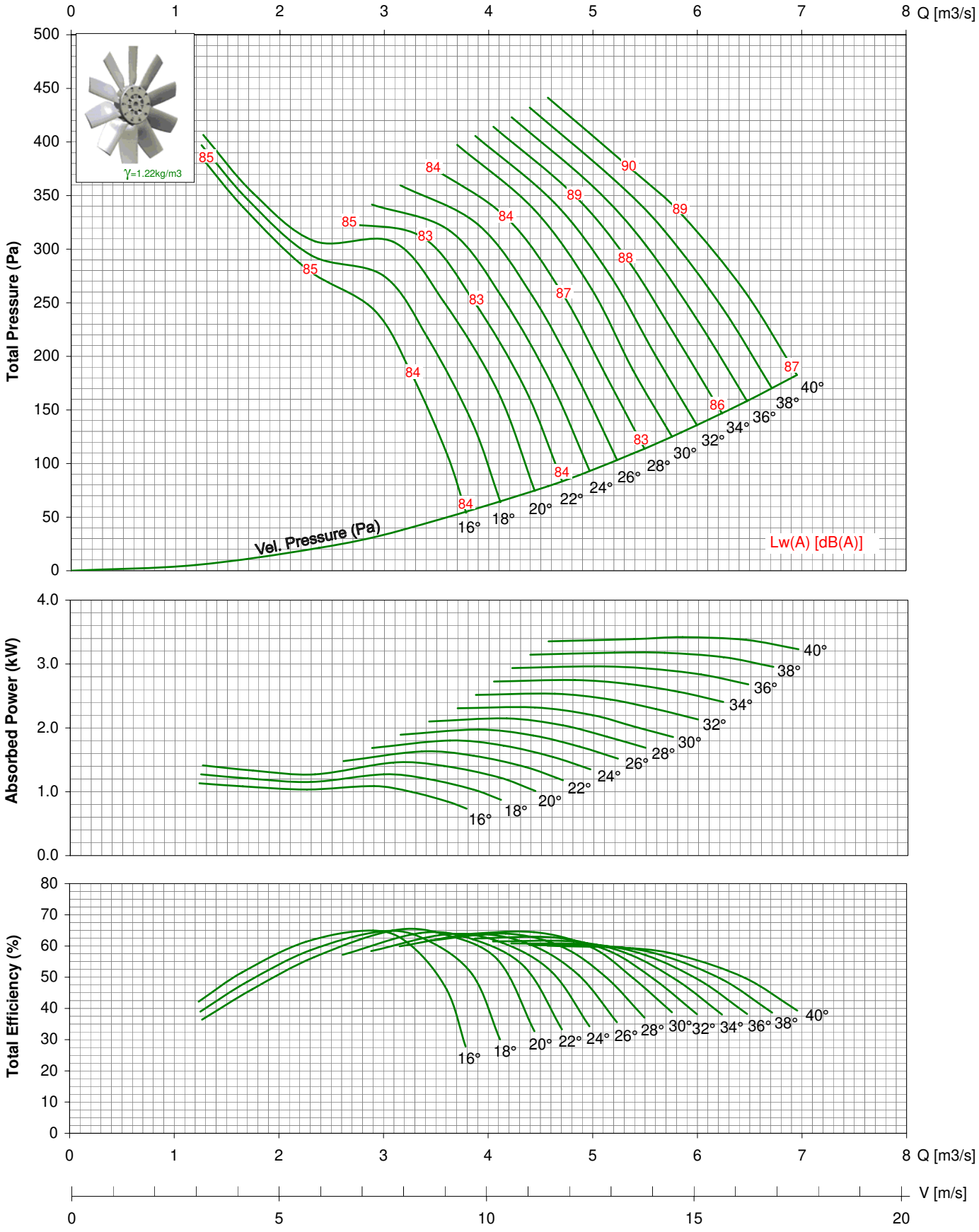

- Performance certified is for installation type D - ducted inlet, ducted outlet. Performance ratings do not include the effects of appurtenances (accessories).
- Power ratings (kW) does not include transmission losses.
- The A-weighted sound ratings shown have been calculated per AMCA Standard 301. Values shown are for inlet Lwi(A) sound power level for installation type D - ducted inlet, ducted outlet, rating include the effect of duct end correction.
- The AMCA Certified Ratings Seal applies to air performance only. dBA levels are not licensed by AMCA international.

TDA 710-V / 14AA/ 12-12/ _ _ / _
1750rpm - 60Hz

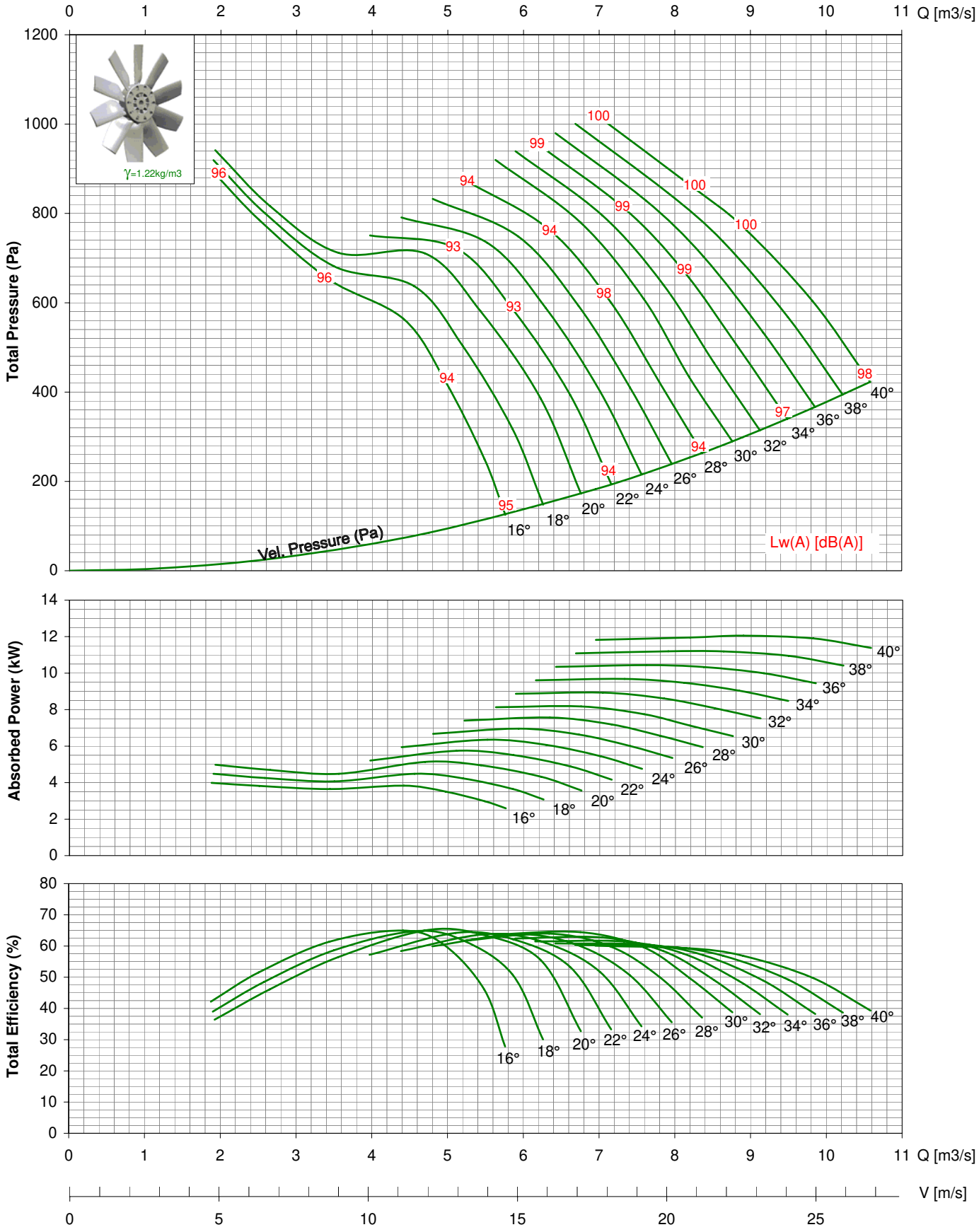

- Performance certified is for installation type D - ducted inlet, ducted outlet. Performance ratings do not include the effects of appurtenances (accessories).
- Power ratings (kW) does not include transmission losses.
- The A-weighted sound ratings shown have been calculated per AMCA Standard 301. Values shown are for inlet Lwi(A) sound power level for installation type D - ducted inlet, ducted outlet, rating include the effect of duct end correction.
- The AMCA Certified Ratings Seal applies to air performance only. dBA levels are not licensed by AMCA international.

VANE AXIAL FAN DIRECT DRIVEN



Kruger Ventilation (Taiwan) Co., Ltd. certifies that the TDA 800 -V shown herein is licensed to bear the AMCA Seal. The ratings shown are based on tests and procedures performed in accordance with AMCA publication 211 and comply with the requirements of the AMCA Certified Ratings Program.

Series TDA-V

Features
For commercial and industrial applications where large volumes of air are required at moderate to high pressure, special designed integral straightening vanes, reduced turbulence, provide high performance and low sound level.

Construction
Double flanged casing is produced in mild steel or galvanised Steel, the impeller having manually adjustable pitch aerofoil blades is made of PPG, PAG or pressure-casted Aluminium.

Finish
Available in standard finishes of galvanisation or painting.

Operating Temperature
-20°C to +55°C

Motors
Totally enclosed Class 'F' motor, to a min. IP54 protection are fitted as standard. Standard motor up to 2.2kW are usually supplied on DOL starting, motor 3.0kW and above are star/delta starting.

Airflow Direction
Air flowing from impeller to motor is fitted as standard.

MODEL: TDA 800-V / 14AA / 12-12 /__/_ - __/__

- Motor no. of pole – 4 or 6
- Motor Power kW
- Airflow direction – B
- Blade angle - 12°, 14°, 16°, 18°, 20°, 22°, 24°, 26°, 28°, 30°, 32°

* All Dimension in mm

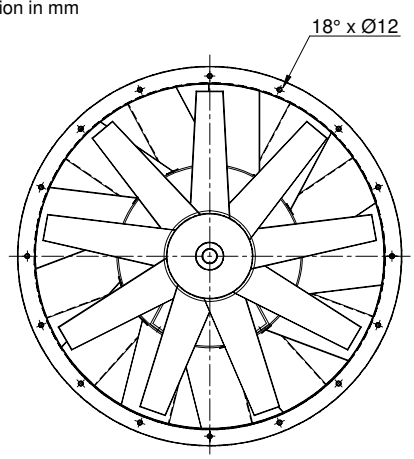

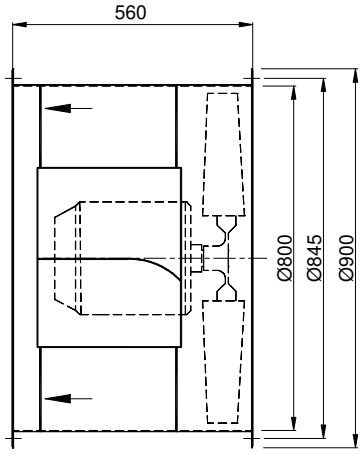

TDA 800-V / 14AA/ 12-12/ _ _ / _
950rpm - 50Hz

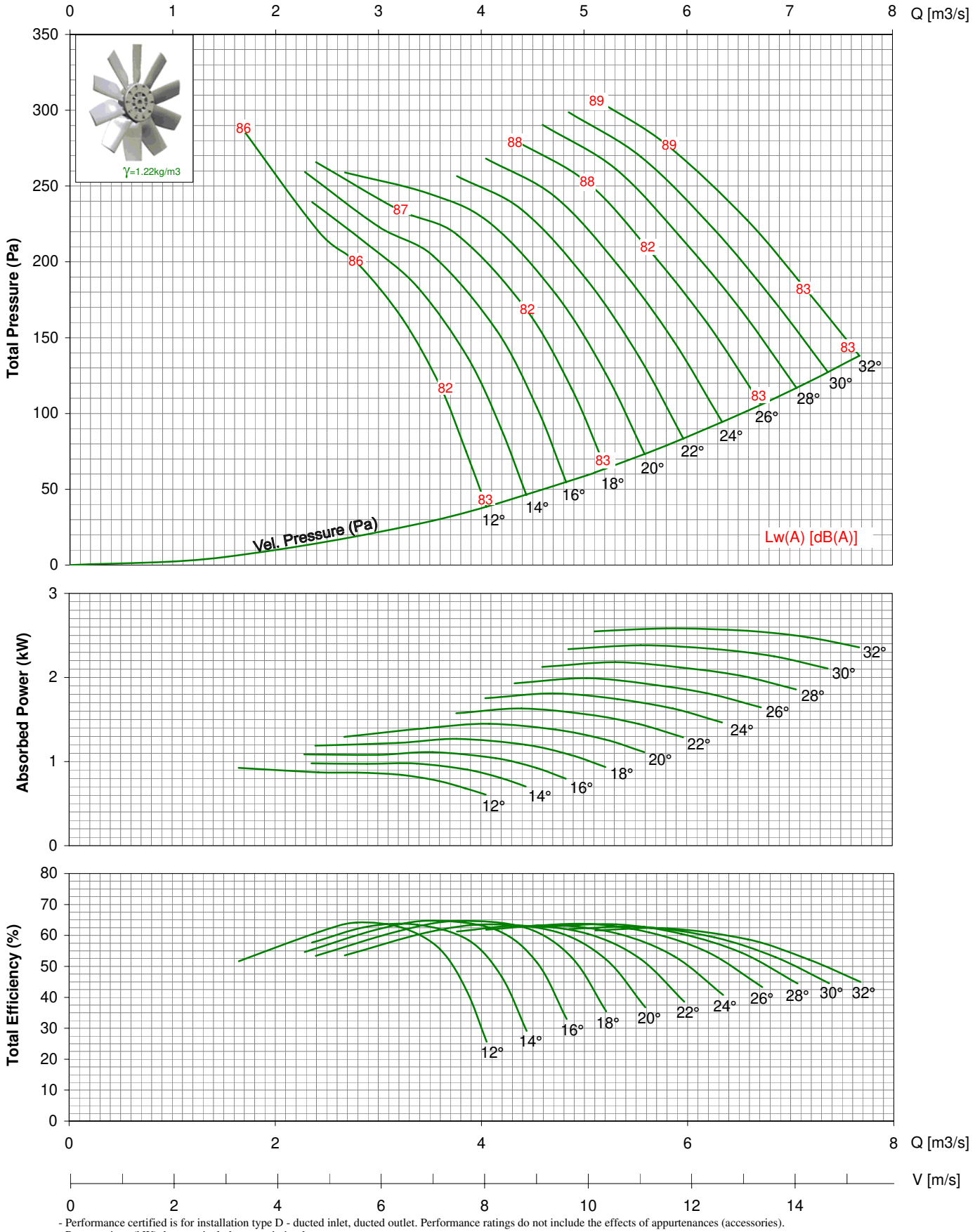

- Performance certified is for installation type D - ducted inlet, ducted outlet. Performance ratings do not include the effects of appurtenances (accessories).
- Power ratings (kW) does not include transmission losses.
- The A-weighted sound ratings shown have been calculated per AMCA Standard 301. Values shown are for inlet Lwi(A) sound power level for installation type D - ducted inlet, ducted outlet, rating include the effect of duct end correction.
- The AMCA Certified Ratings Seal applies to air performance only. dBA levels are not licensed by AMCA international.

TDA 800-V / 14AA/ 12-12/ _ _ / _
1450rpm - 50Hz

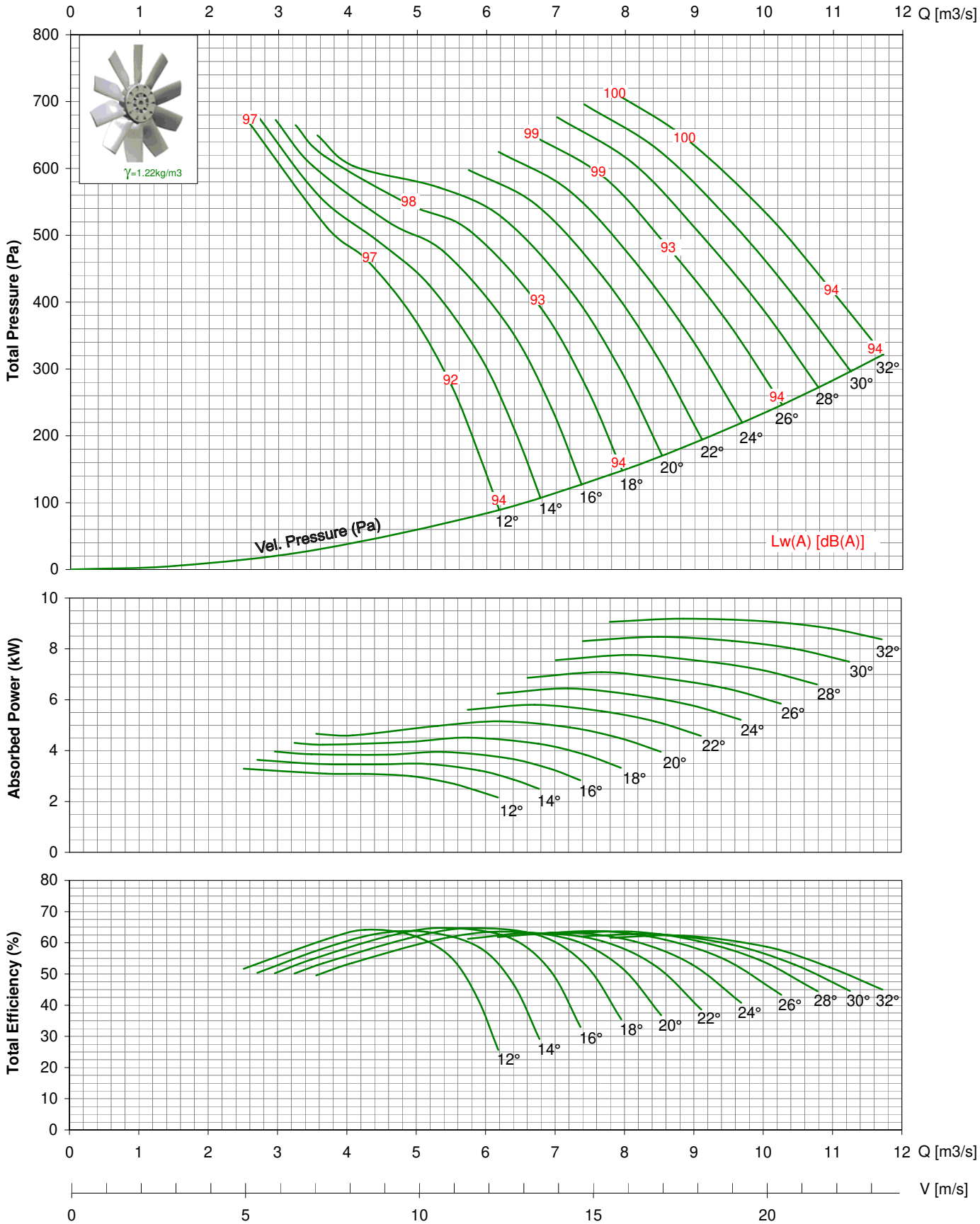

- Performance certified is for installation type D - ducted inlet, ducted outlet. Performance ratings do not include the effects of appurtenances (accessories).
- Power ratings (kW) does not include transmission losses.
- The A-weighted sound ratings shown have been calculated per AMCA Standard 301. Values shown are for inlet Lwi(A) sound power level for installation type D - ducted inlet, ducted outlet, rating include the effect of duct end correction.
- The AMCA Certified Ratings Seal applies to air performance only. dBA levels are not licensed by AMCA international.

TDA 800-V / 14AA/ 12-12/ _ _ / _
1150rpm - 60Hz

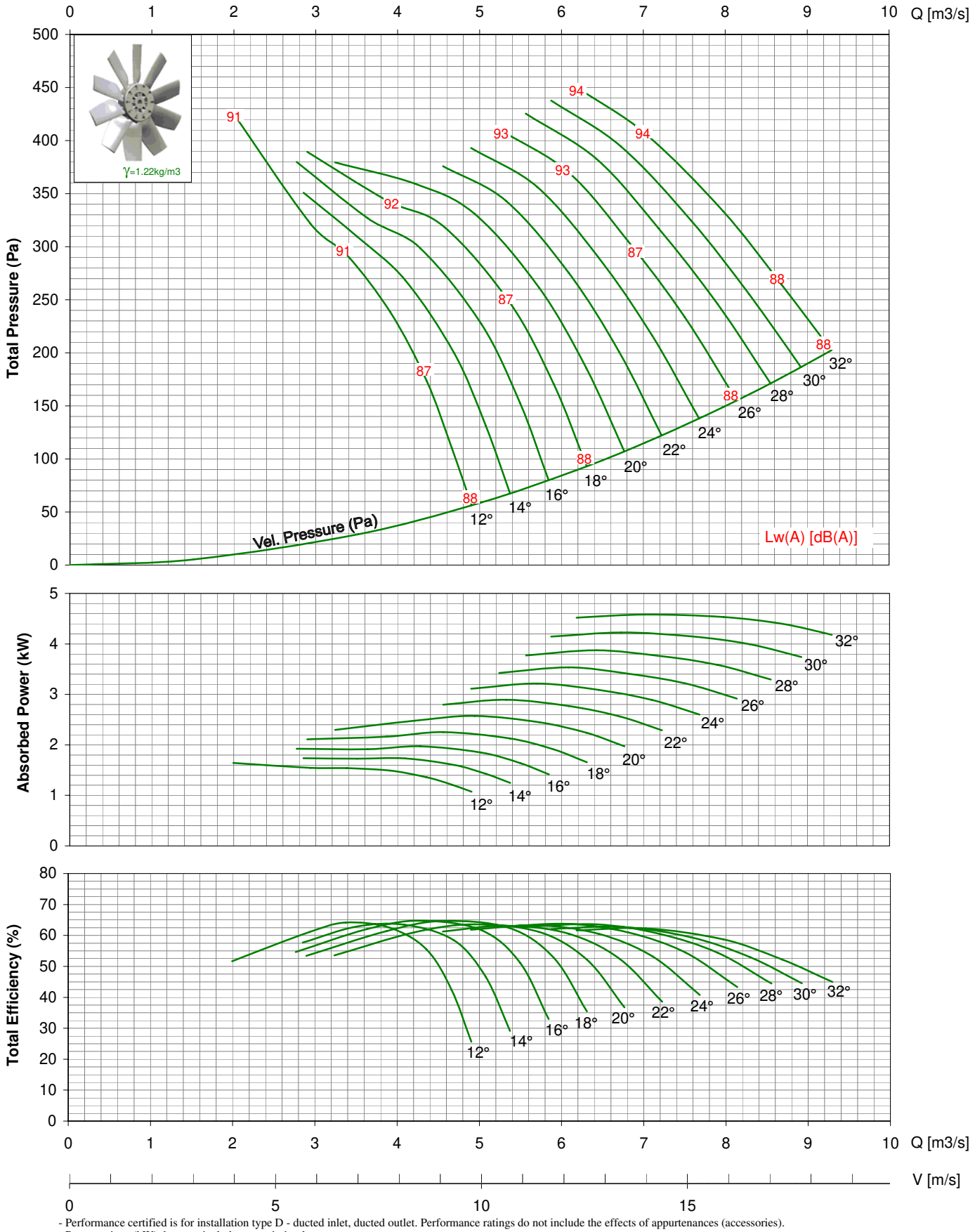

- Performance certified is for installation type D - ducted inlet, ducted outlet. Performance ratings do not include the effects of appurtenances (accessories).
- Power ratings (kW) does not include transmission losses.
- The A-weighted sound ratings shown have been calculated per AMCA Standard 301. Values shown are for inlet Lwi(A) sound power level for installation type D - ducted inlet, ducted outlet, rating include the effect of duct end correction.
- The AMCA Certified Ratings Seal applies to air performance only. dBA levels are not licensed by AMCA international.

TDA 800-V / 14AA/ 12-12/ _ _ / _
1750rpm - 60Hz

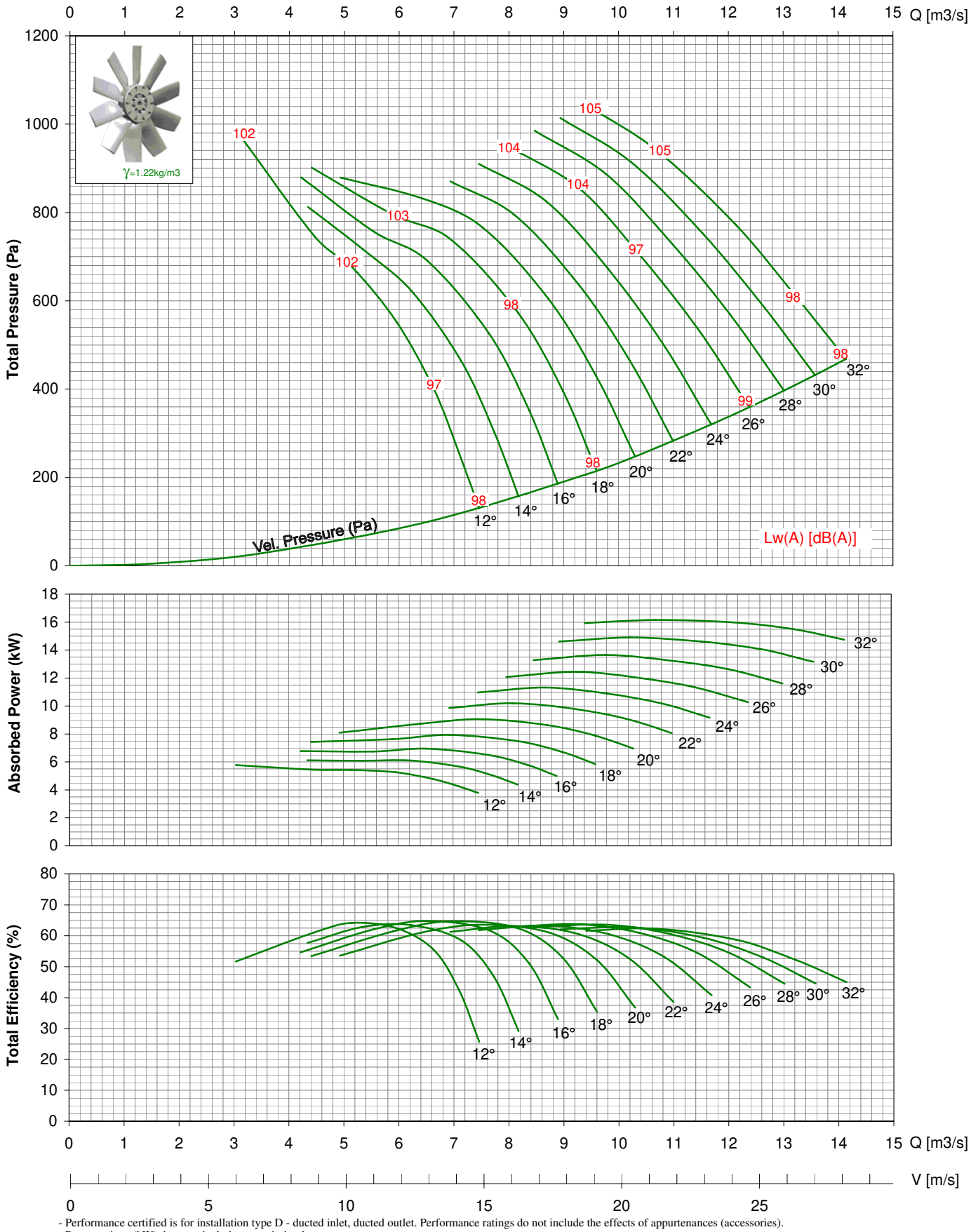

- Performance certified is for installation type D - ducted inlet, ducted outlet. Performance ratings do not include the effects of appurtenances (accessories).
- Power ratings (kW) does not include transmission losses.
- The A-weighted sound ratings shown have been calculated per AMCA Standard 301. Values shown are for inlet Lwi(A) sound power level for installation type D - ducted inlet, ducted outlet, rating include the effect of duct end correction.
- The AMCA Certified Ratings Seal applies to air performance only. dBA levels are not licensed by AMCA international.

VANE AXIAL FAN DIRECT DRIVEN



Kruger Ventilation (Taiwan) Co., Ltd. certifies that the TDA 900 -V shown herein is licensed to bear the AMCA Seal. The ratings shown are based on tests and procedures performed in accordance with AMCA publication 211 and comply with the requirements of the AMCA Certified Ratings Program.

Series TDA-V

Features
For commercial and industrial applications where large volumes of air are required at moderate to high pressure, special designed integral straightening vanes, reduced turbulence, provide high performance and low sound level.

Construction
Double flanged casing is produced in mild steel or galvanised Steel, the impeller having manually adjustable pitch aerofoil blades is made of PPG, PAG or pressure-casted Aluminium.

Finish
Available in standard finishes of galvanisation or painting.

Operating Temperature
-20°C to +55°C

Motors
Totally enclosed Class 'F' motor, to a min. IP54 protection are fitted as standard. Standard motor up to 2.2kW are usually supplied on DOL starting, motor 3.0kW and above are star/delta starting.

Airflow Direction
Air flowing from impeller to motor is fitted as standard.

MODEL: TDA 900-V / 14AA / 12-12 /__/_ - __/__

- Motor no. of pole – 4 or 6
- Motor Power kW
- Airflow direction – B
- Blade angle - 10°, 12°, 14°, 16°, 18°, 20°, 22°, 24°, 26°, 28°, 30°, 32°

* All Dimension in mm

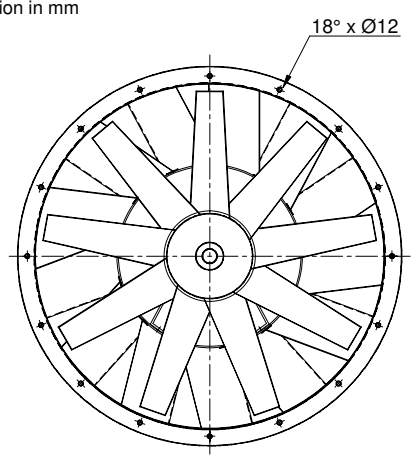

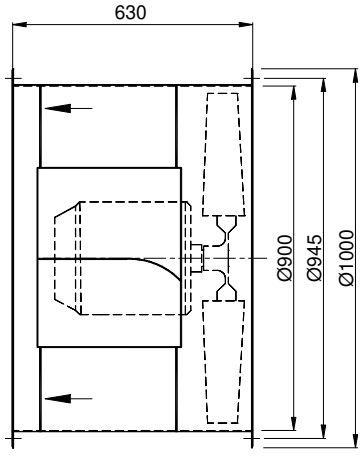

TDA 900-V / 14AA/ 12-12/ _ _ / _
950rpm - 50Hz

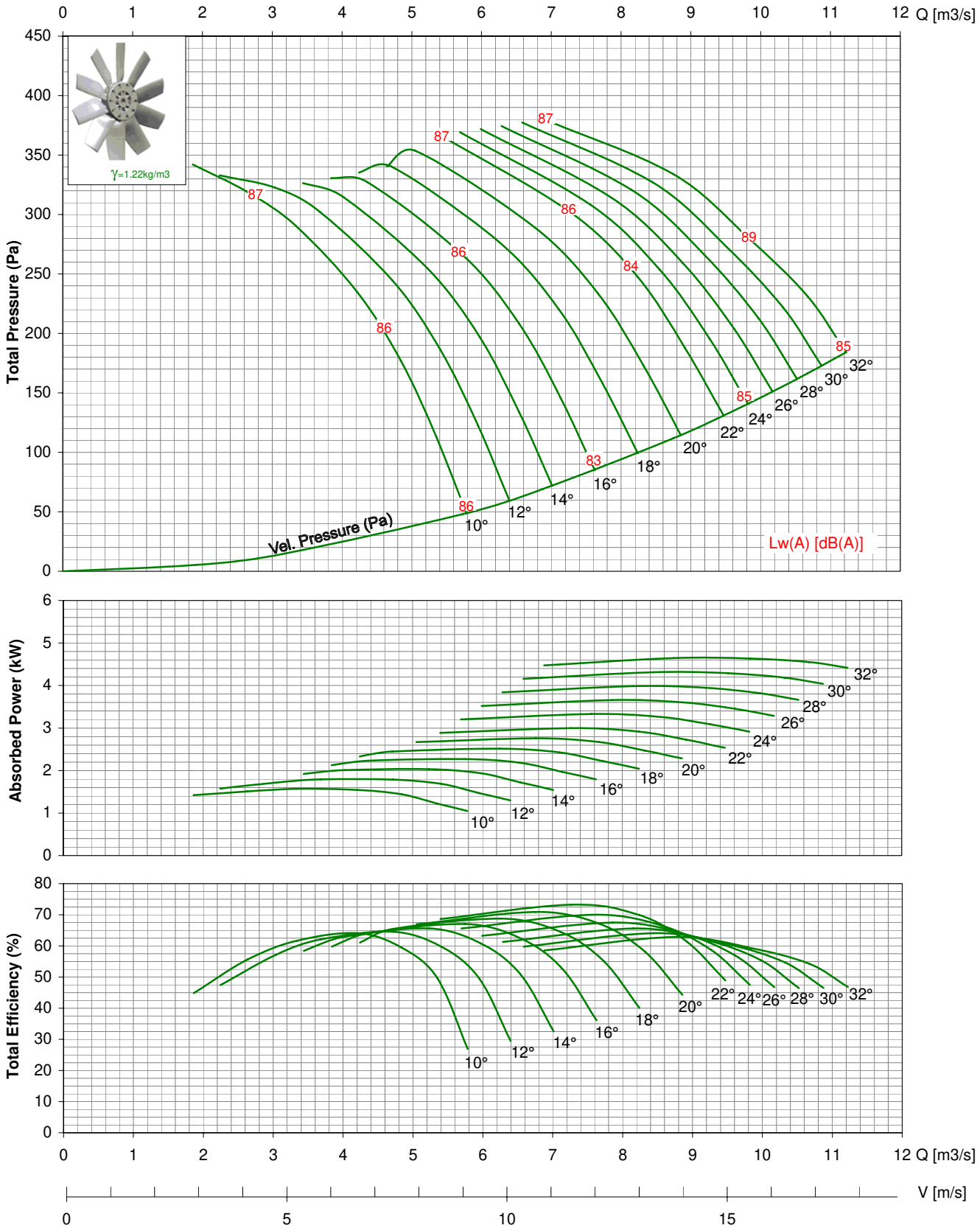

- Performance certified is for installation type D - ducted inlet, ducted outlet. Performance ratings do not include the effects of appurtenances (accessories).
- Power ratings (kW) does not include transmission losses.
- The A-weighted sound ratings shown have been calculated per AMCA Standard 301. Values shown are for inlet Lwi(A) sound power level for installation type D - ducted inlet, ducted outlet, rating include the effect of duct end correction.
- The AMCA Certified Ratings Seal applies to air performance only. dBA levels are not licensed by AMCA international.

TDA 900-V / 14AA/ 12-12/ _ _ / _
1450rpm - 50Hz

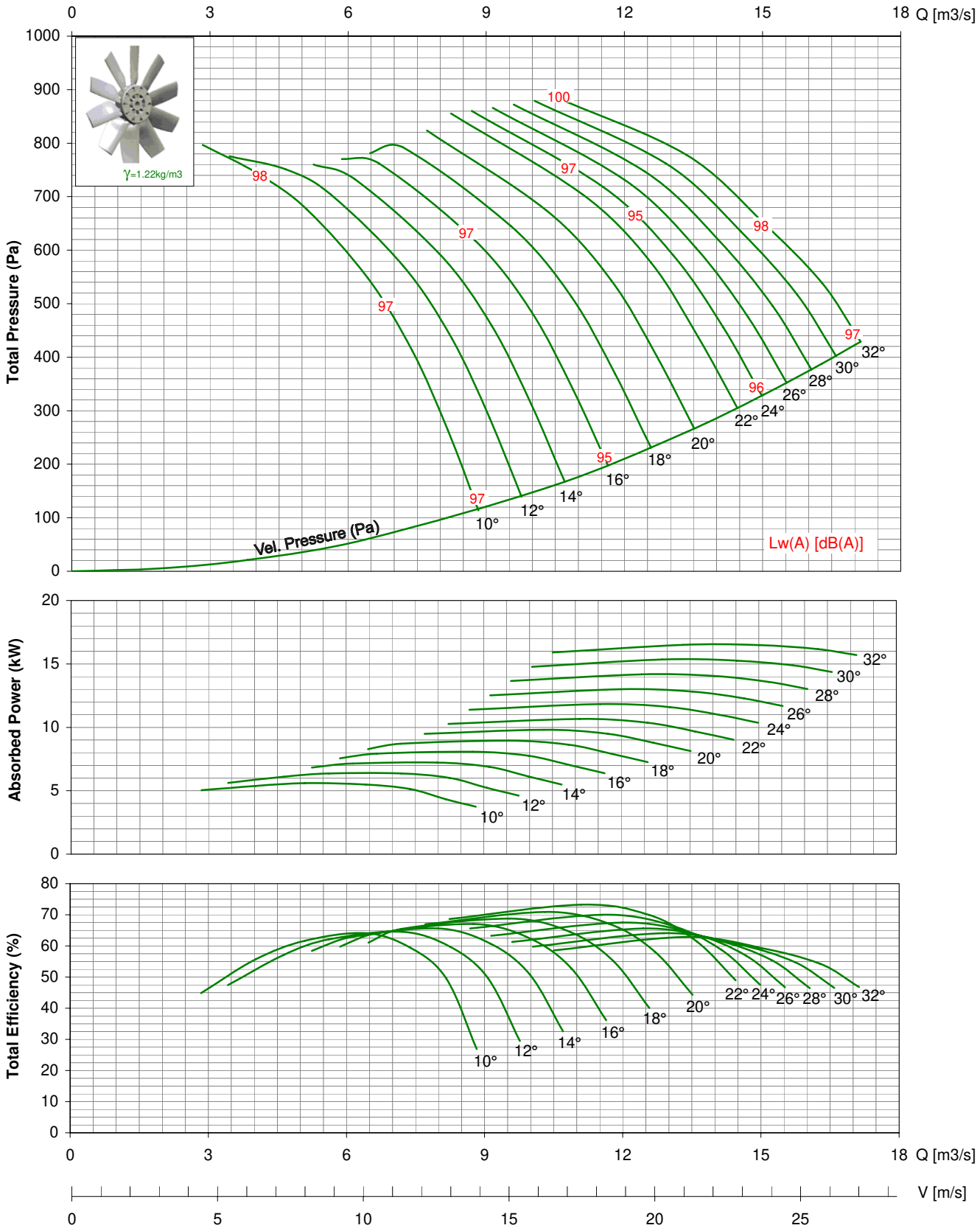

- Performance certified is for installation type D - ducted inlet, ducted outlet. Performance ratings do not include the effects of appurtenances (accessories).
- Power ratings (kW) does not include transmission losses.
- The A-weighted sound ratings shown have been calculated per AMCA Standard 301. Values shown are for inlet Lwi(A) sound power level for installation type D - ducted inlet, ducted outlet, rating include the effect of duct end correction.
- The AMCA Certified Ratings Seal applies to air performance only. dBA levels are not licensed by AMCA international.

TDA 900-V / 14AA/ 12-12/ _ _ / _
1150rpm - 60Hz

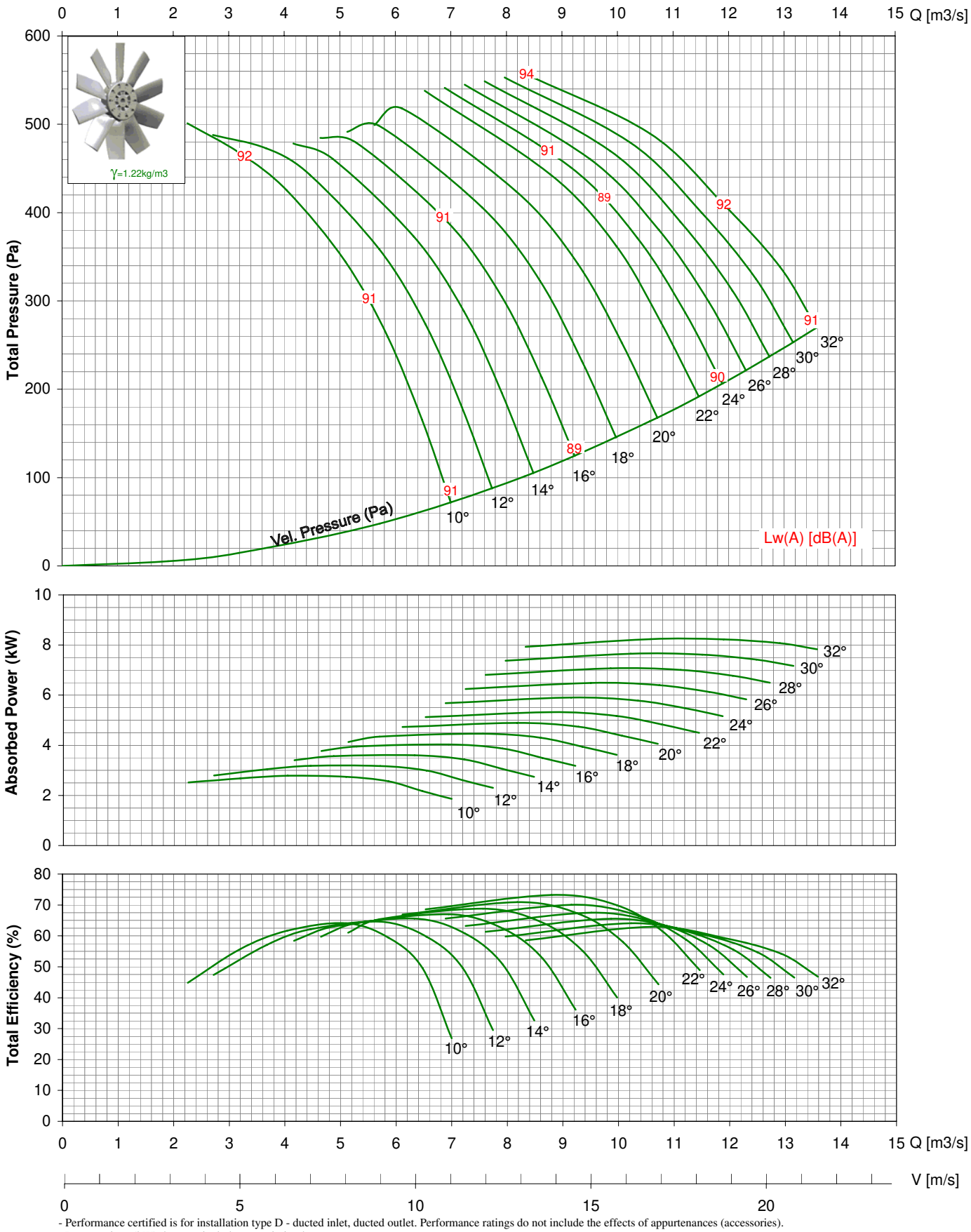

- Performance certified is for installation type D - ducted inlet, ducted outlet. Performance ratings do not include the effects of appurtenances (accessories).
- Power ratings (kW) does not include transmission losses.
- The A-weighted sound ratings shown have been calculated per AMCA Standard 301. Values shown are for inlet Lwi(A) sound power level for installation type D - ducted inlet, ducted outlet, rating include the effect of duct end correction.
- The AMCA Certified Ratings Seal applies to air performance only. dBA levels are not licensed by AMCA international.

TDA 900-V / 14AA/ 12-12/ _ _ / _
1750rpm - 60Hz

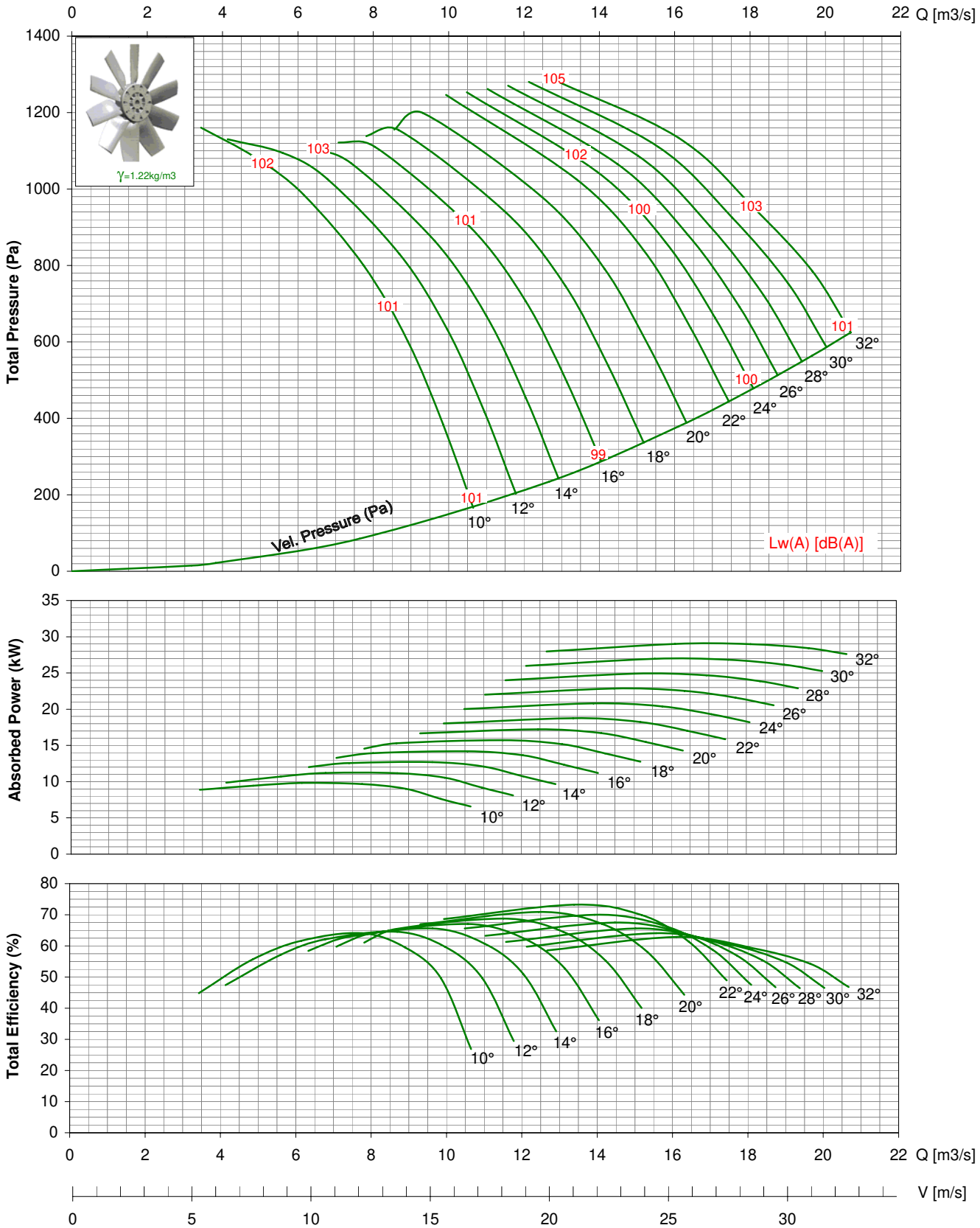

- Performance certified is for installation type D - ducted inlet, ducted outlet. Performance ratings do not include the effects of appurtenances (accessories).
- Power ratings (kW) does not include transmission losses.
- The A-weighted sound ratings shown have been calculated per AMCA Standard 301. Values shown are for inlet Lwi(A) sound power level for installation type D - ducted inlet, ducted outlet, rating include the effect of duct end correction.
- The AMCA Certified Ratings Seal applies to air performance only. dBA levels are not licensed by AMCA international.

VANE AXIAL FAN DIRECT DRIVEN



Kruger Ventilation (Taiwan) Co., Ltd. certifies that the TDA1000-V shown herein is licensed to bear the AMCA Seal. The ratings shown are based on tests and procedures performed in accordance with AMCA publication 211 and comply with the requirements of the AMCA Certified Ratings Program.

Series TDA-V

Features
For commercial and industrial applications where large volumes of air are required at moderate to high pressure, special designed integral straightening vanes, reduced turbulence, provide high performance and low sound level.

Construction
Double flanged casing is produced in mild steel or galvanised Steel, the impeller having manually adjustable pitch aerofoil blades is made of PPG, PAG or pressure-casted Aluminium.

Finish
Available in standard finishes of galvanisation or painting.

Operating Temperature
-20°C to +55°C

Motors
Totally enclosed Class 'F' motor, to a min. IP54 protection are fitted as standard. Standard motor up to 2.2kW are usually supplied on DOL starting, motor 3.0kW and above are star/delta starting.

Airflow Direction
Air flowing from impeller to motor is fitted as standard.

MODEL: TDA 1000-V / 14AA / 12-12 /__/_ - __/__

- Motor no. of pole – 4, 6 or 8
- Motor Power kW
- Airflow direction – B
- Blade angle - 4°, 6°, 8°, 10°, 12°, 14°, 16°, 18°, 20°, 22°, 24°, 26°, 28°

* All Dimension in mm

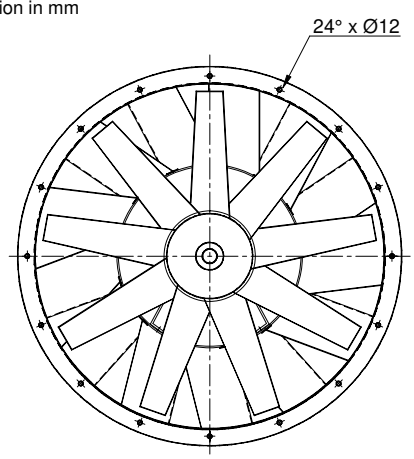

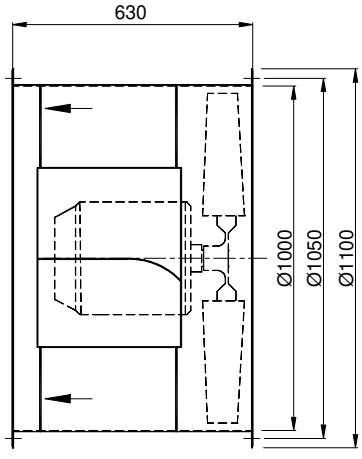

TDA 1000-V / 14AA/ 12-12/ _ _ / _
725rpm - 50Hz

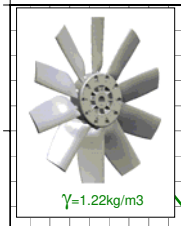

Total Pressure (Pa)

Vel. Pressure (Pa)

Lw(A) [dB(A)]

Absorbed Power (kW)

Total Efficiency (%)

Q [m3/s]

V [m/s]

- Performance certified is for installation type D - ducted inlet, ducted outlet. Performance ratings do not include the effects of appurtenances (accessories).
- Power ratings (kW) does not include transmission losses.
- The A-weighted sound ratings shown have been calculated per AMCA Standard 301. Values shown are for inlet Lwi(A) sound power level for installation type D - ducted inlet, ducted outlet, rating include the effect of duct end correction
- The AMCA Certified Ratings Seal applies to air performance only. dBA levels are not licensed by AMCA international.

TDA 1000-V / 14AA/ 12-12/ _ _ / _
950rpm - 50Hz

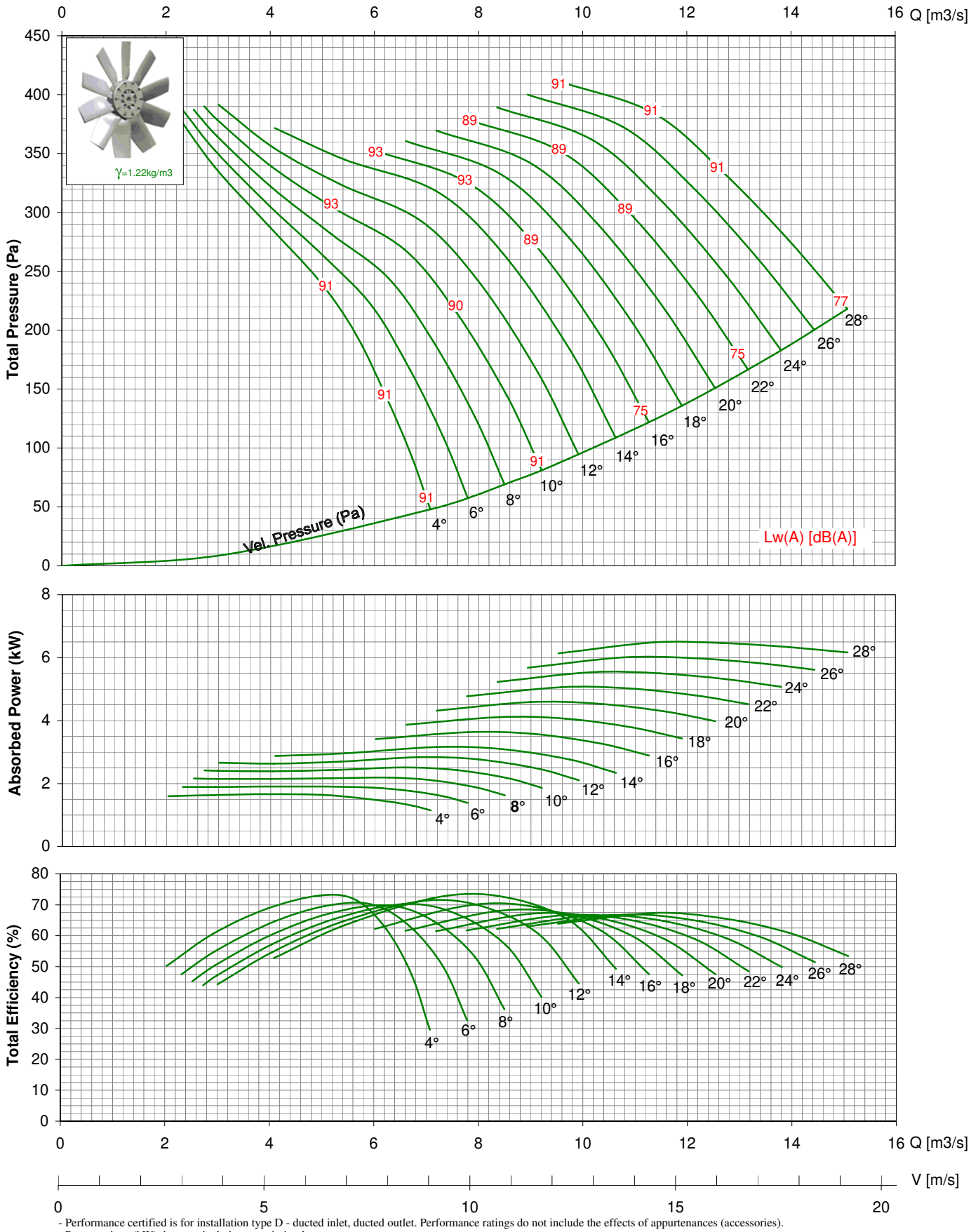

- Performance certified is for installation type D - ducted inlet, ducted outlet. Performance ratings do not include the effects of appurtenances (accessories).
- Power ratings (kW) does not include transmission losses.
- The A-weighted sound ratings shown have been calculated per AMCA Standard 301. Values shown are for inlet Lwi(A) sound power level for installation type D - ducted inlet, ducted outlet, rating include the effect of duct end correction
- The AMCA Certified Ratings Seal applies to air performance only. dBA levels are not licensed by AMCA international.

TDA 1000-V / 14AA/ 12-12/ _ _ / _
1450rpm - 50Hz

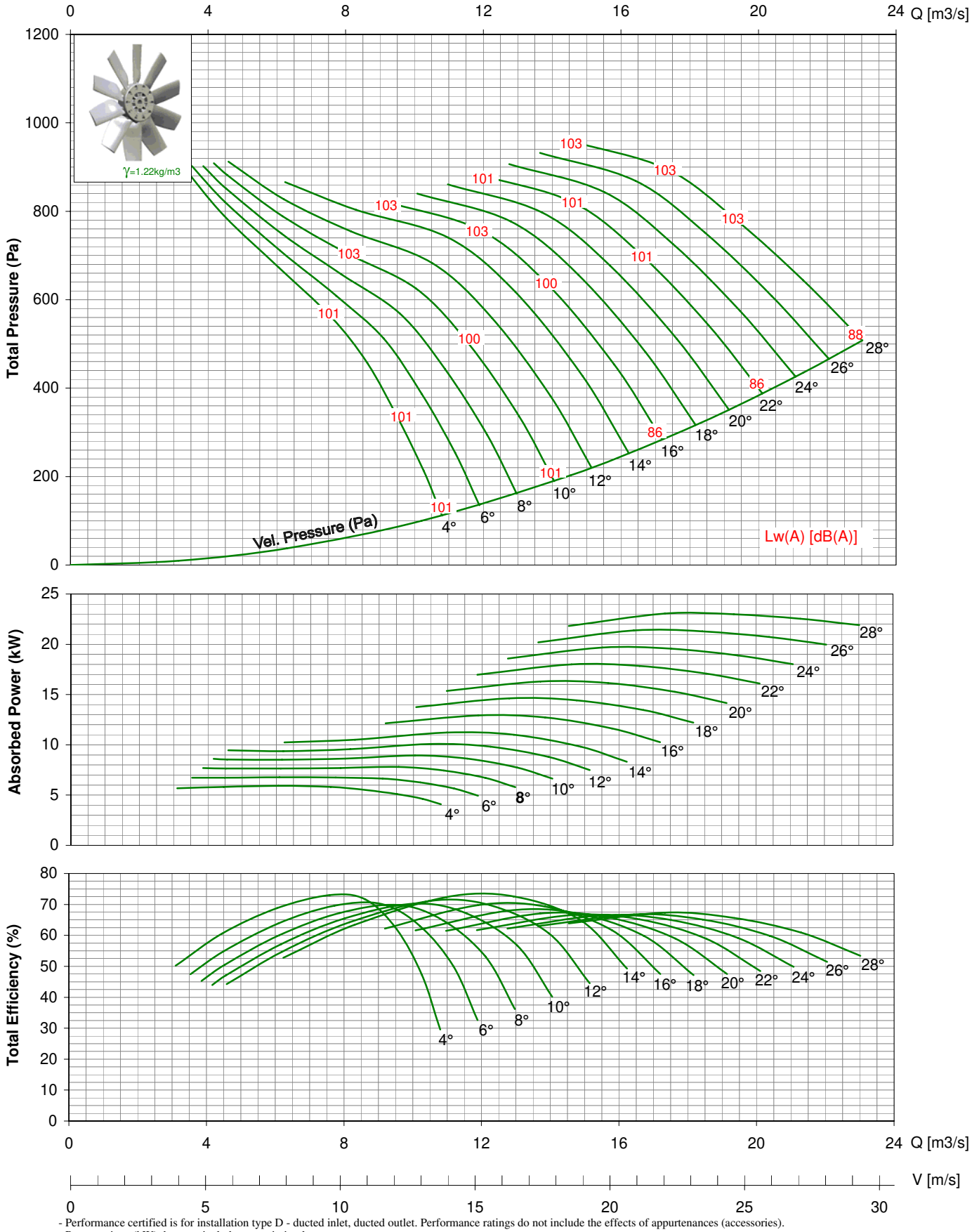

- Performance certified is for installation type D - ducted inlet, ducted outlet. Performance ratings do not include the effects of appurtenances (accessories).
- Power ratings (kW) does not include transmission losses.
- The A-weighted sound ratings shown have been calculated per AMCA Standard 301. Values shown are for inlet Lwi(A) sound power level for installation type D - ducted inlet, ducted outlet, rating include the effect of duct end correction.
- The AMCA Certified Ratings Seal applies to air performance only. dBA levels are not licensed by AMCA international.

TDA 1000-V / 14AA/ 12-12/ _ _ / _
875rpm - 60Hz

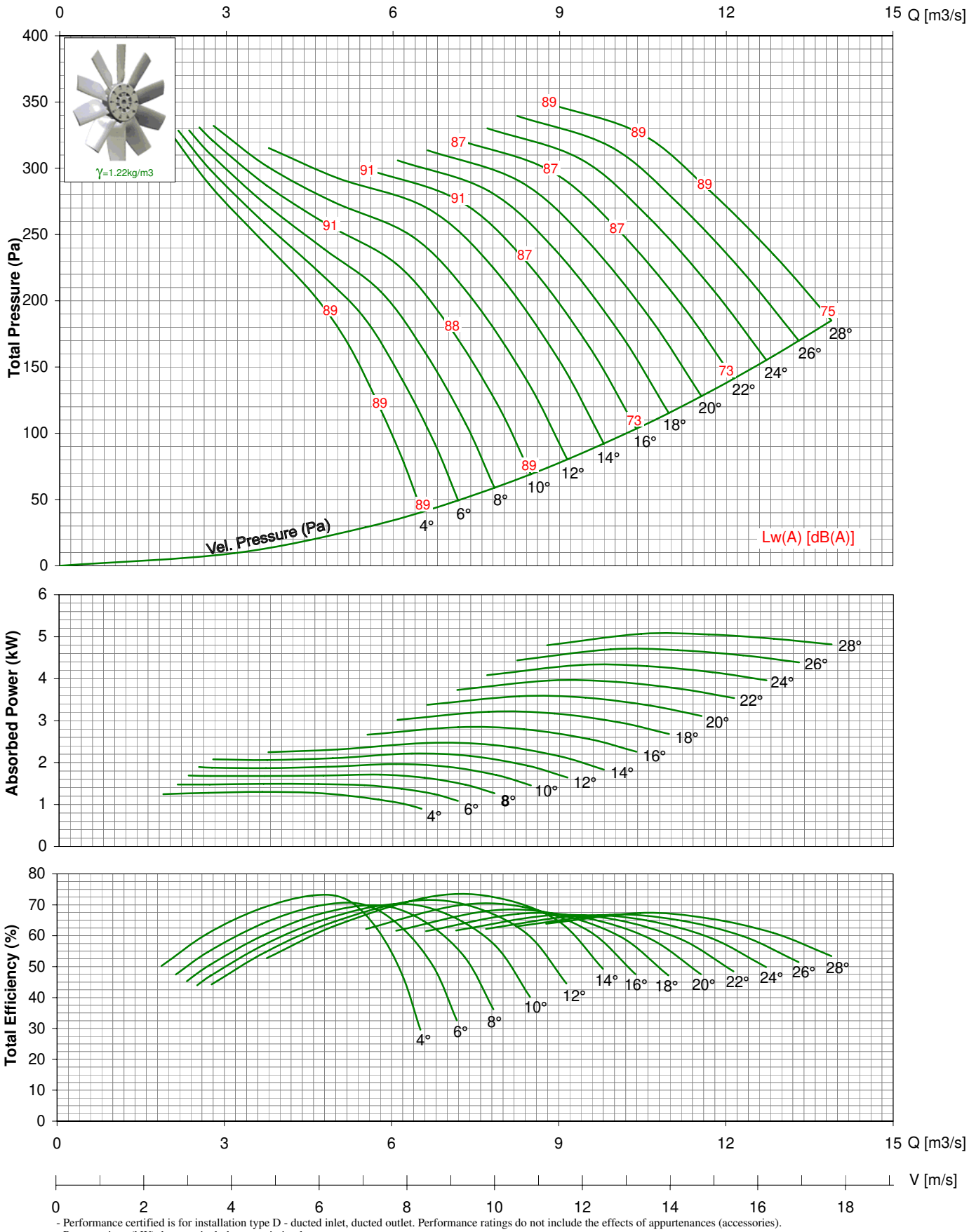

- Performance certified is for installation type D - ducted inlet, ducted outlet. Performance ratings do not include the effects of appurtenances (accessories).
- Power ratings (kW) does not include transmission losses.
- The A-weighted sound ratings shown have been calculated per AMCA Standard 301. Values shown are for inlet Lwi(A) sound power level for installation type D - ducted inlet, ducted outlet, rating include the effect of duct end correction.
- The AMCA Certified Ratings Seal applies to air performance only. dBA levels are not licensed by AMCA international.

TDA 1000-V / 14AA/ 12-12/ _ _ / _
1150rpm - 60Hz

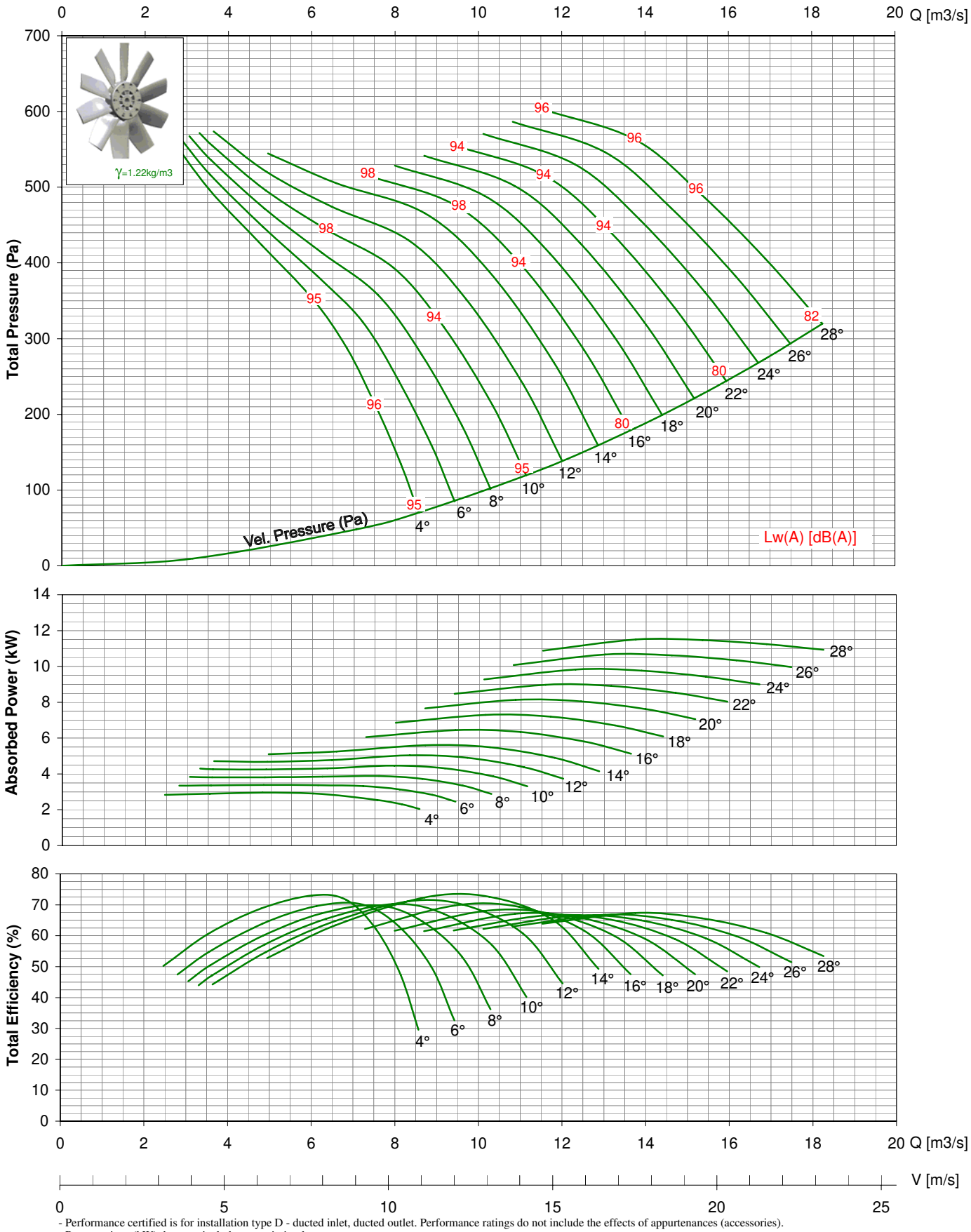

- Performance certified is for installation type D - ducted inlet, ducted outlet. Performance ratings do not include the effects of appurtenances (accessories).
- Power ratings (kW) does not include transmission losses.
- The A-weighted sound ratings shown have been calculated per AMCA Standard 301. Values shown are for inlet Lwi(A) sound power level for installation type D - ducted inlet, ducted outlet, rating include the effect of duct end correction.
- The AMCA Certified Ratings Seal applies to air performance only. dBA levels are not licensed by AMCA international.

TDA 1000-V / 14AA/ 12-12/ _ _ / _
1750rpm - 60Hz

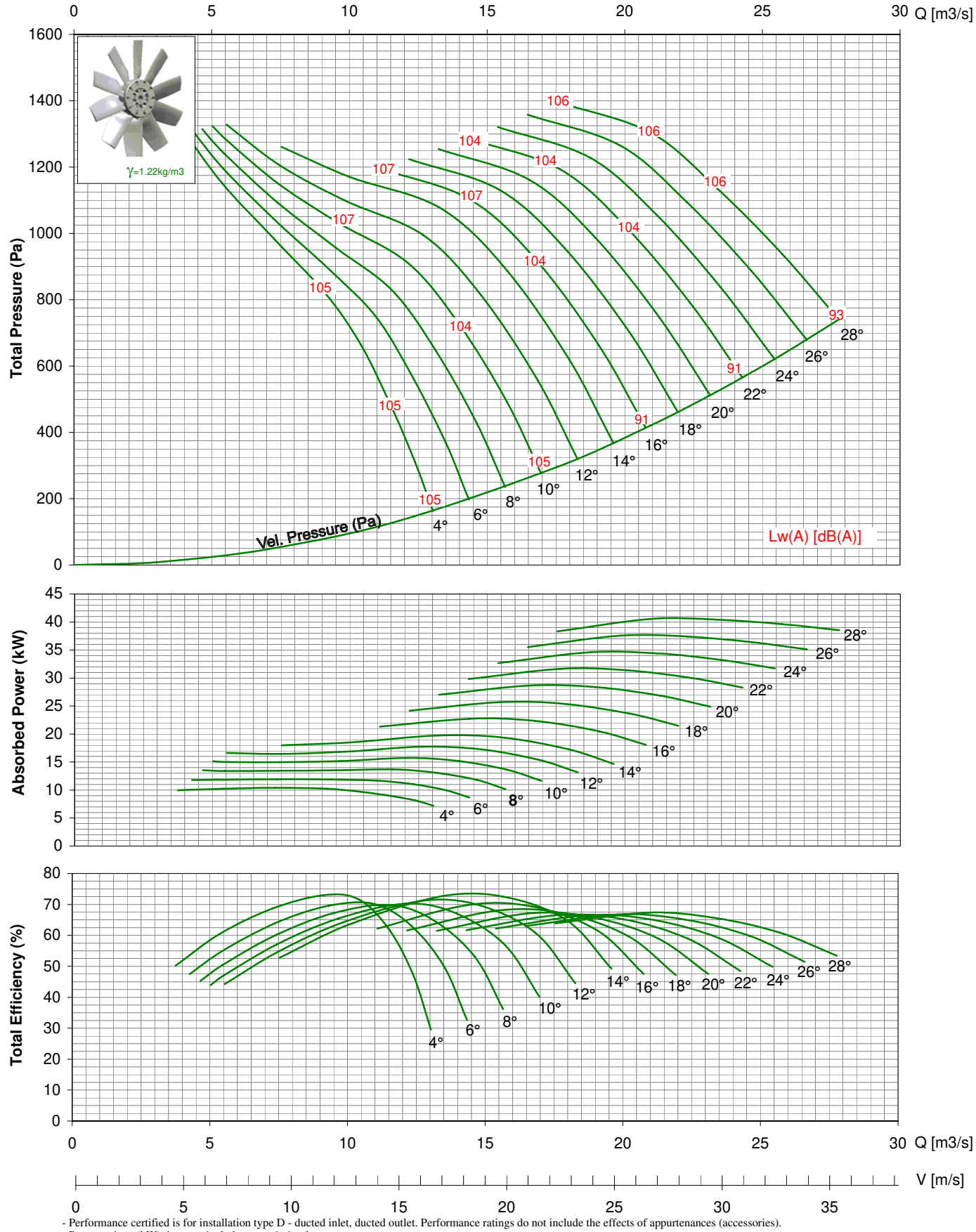

- Performance certified is for installation type D - ducted inlet, ducted outlet. Performance ratings do not include the effects of appurtenances (accessories).
- Power ratings (kW) does not include transmission losses.
- The A-weighted sound ratings shown have been calculated per AMCA Standard 301. Values shown are for inlet Lwi(A) sound power level for installation type D - ducted inlet, ducted outlet, rating include the effect of duct end correction.
- The AMCA Certified Ratings Seal applies to air performance only. dBA levels are not licensed by AMCA international.

VANE AXIAL FAN DIRECT DRIVEN



Series TDA-V

Features
For commercial and industrial applications where large volumes of air are required at moderate to high pressure, special designed integral straightening vanes, reduced turbulence, provide high performance and low sound level.

Construction
Double flanged casing is produced in mild steel or galvanised Steel, the impeller having manually adjustable pitch aerofoil blades is made of PPG, PAG or pressure-casted Aluminium.

Finish
Available in standard finishes of galvanisation or painting.

Operating Temperature
-20°C to +55°C

Motors
Totally enclosed Class 'F' motor, to a min. IP54 protection are fitted as standard. Standard motor up to 2.2kW are usually supplied on DOL starting, motor 3.0kW and above are star/delta starting.

Airflow Direction
Air flowing from impeller to motor is fitted as standard.

Kruger Ventilation (Taiwan) Co., Ltd. certifies that the TDA1120-V shown herein is licensed to bear the AMCA Seal. The ratings shown are based on tests and procedures performed in accordance with AMCA publication 211 and comply with the requirements of the AMCA Certified Ratings Program.

MODEL: TDA 1120-V / 14AA / 12-12 /__/_ - __/__

- Motor no. of pole – 4, 6 or 8
- Motor Power kW
- Airflow direction – B
- Blade angle - 0°, 2°, 4°, 6°, 8°, 10°, 12°, 14°, 16°, 18°, 20°, 22°, 24°, 26°

* All Dimension in mm

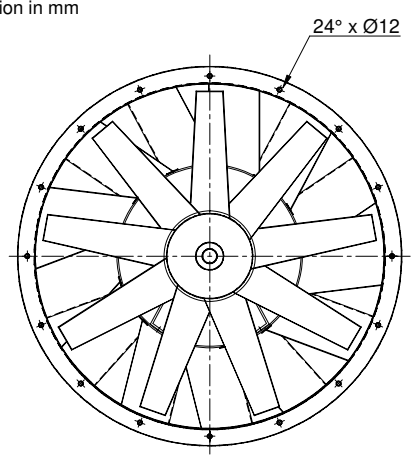

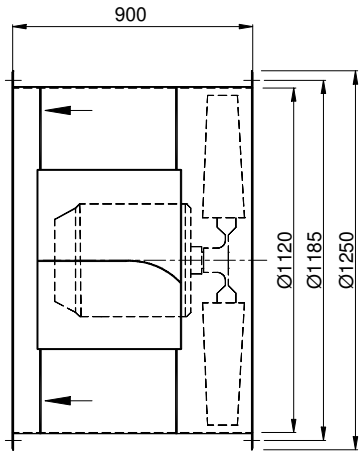

TDA 1120-V / 14AA/ 12-12/ _ _ / _
725rpm - 50Hz

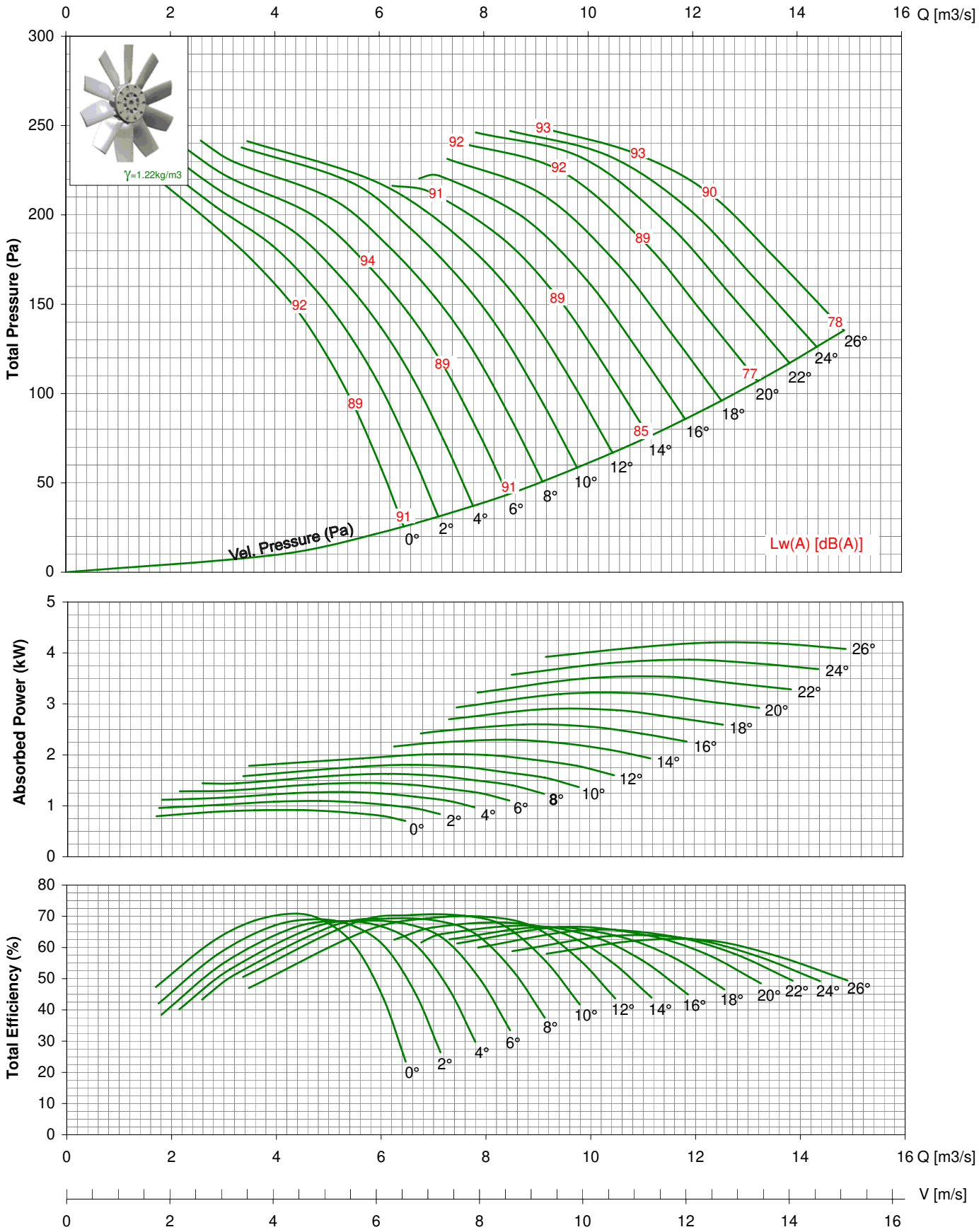

- Performance certified is for installation type D - ducted inlet, ducted outlet. Performance ratings do not include the effects of appurtenances (accessories).
- Power ratings (kW) does not include transmission losses.
- The A-weighted sound ratings shown have been calculated per AMCA Standard 301. Values shown are for inlet Lwi(A) sound power level for installation type D - ducted inlet, ducted outlet, rating include the effect of duct end correction.
- The AMCA Certified Ratings Seal applies to air performance only. dBA levels are not licensed by AMCA international.

TDA 1120-V / 14AA/ 12-12/ _ _ / _
950rpm - 50Hz

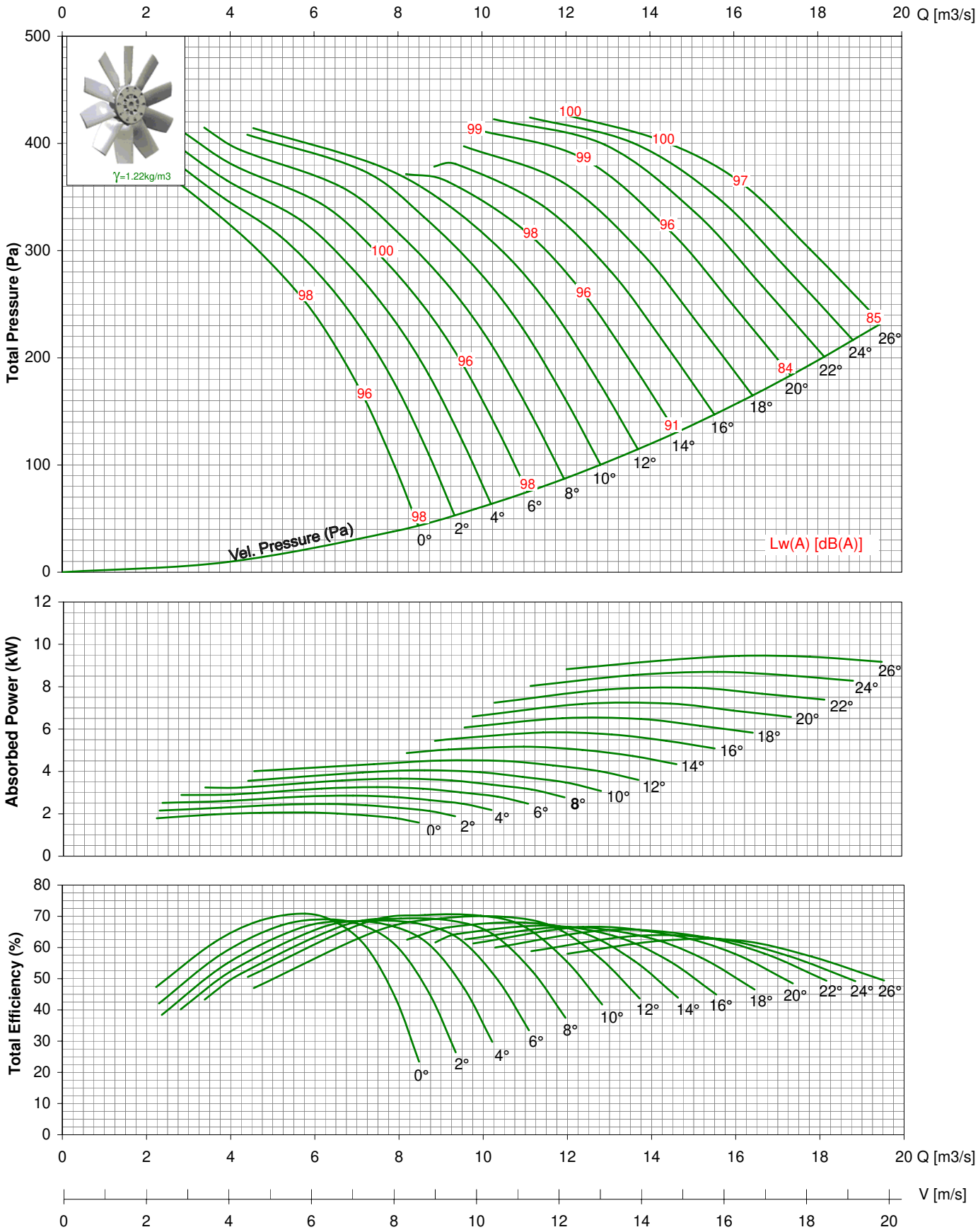

- Performance certified is for installation type D - ducted inlet, ducted outlet. Performance ratings do not include the effects of appurtenances (accessories).
- Power ratings (kW) does not include transmission losses.
- The A-weighted sound ratings shown have been calculated per AMCA Standard 301. Values shown are for inlet Lwi(A) sound power level for installation type D - ducted inlet, ducted outlet, rating include the effect of duct end correction.
- The AMCA Certified Ratings Seal applies to air performance only. dBA levels are not licensed by AMCA international.

TDA 1120-V / 14AA/ 12-12/ _ _ / _
1450rpm - 50Hz

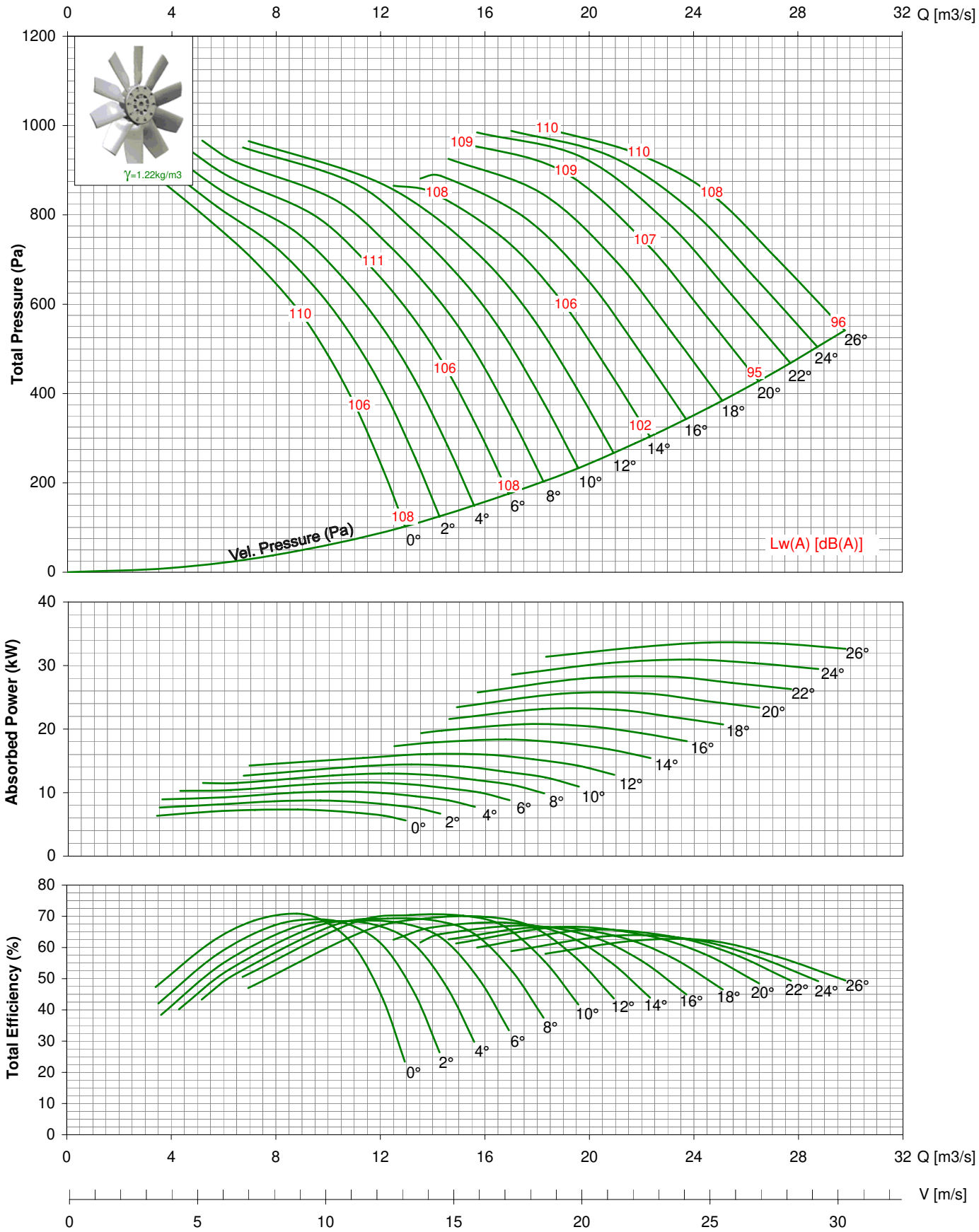

- Performance certified is for installation type D - ducted inlet, ducted outlet. Performance ratings do not include the effects of appurtenances (accessories).
- Power ratings (kW) does not include transmission losses.
- The A-weighted sound ratings shown have been calculated per AMCA Standard 301. Values shown are for inlet Lwi(A) sound power level for installation type D - ducted inlet, ducted outlet, rating include the effect of duct end correction.
- The AMCA Certified Ratings Seal applies to air performance only. dBA levels are not licensed by AMCA international.

TDA 1120-V / 14AA/ 12-12/ _ _ / _
875rpm - 60Hz

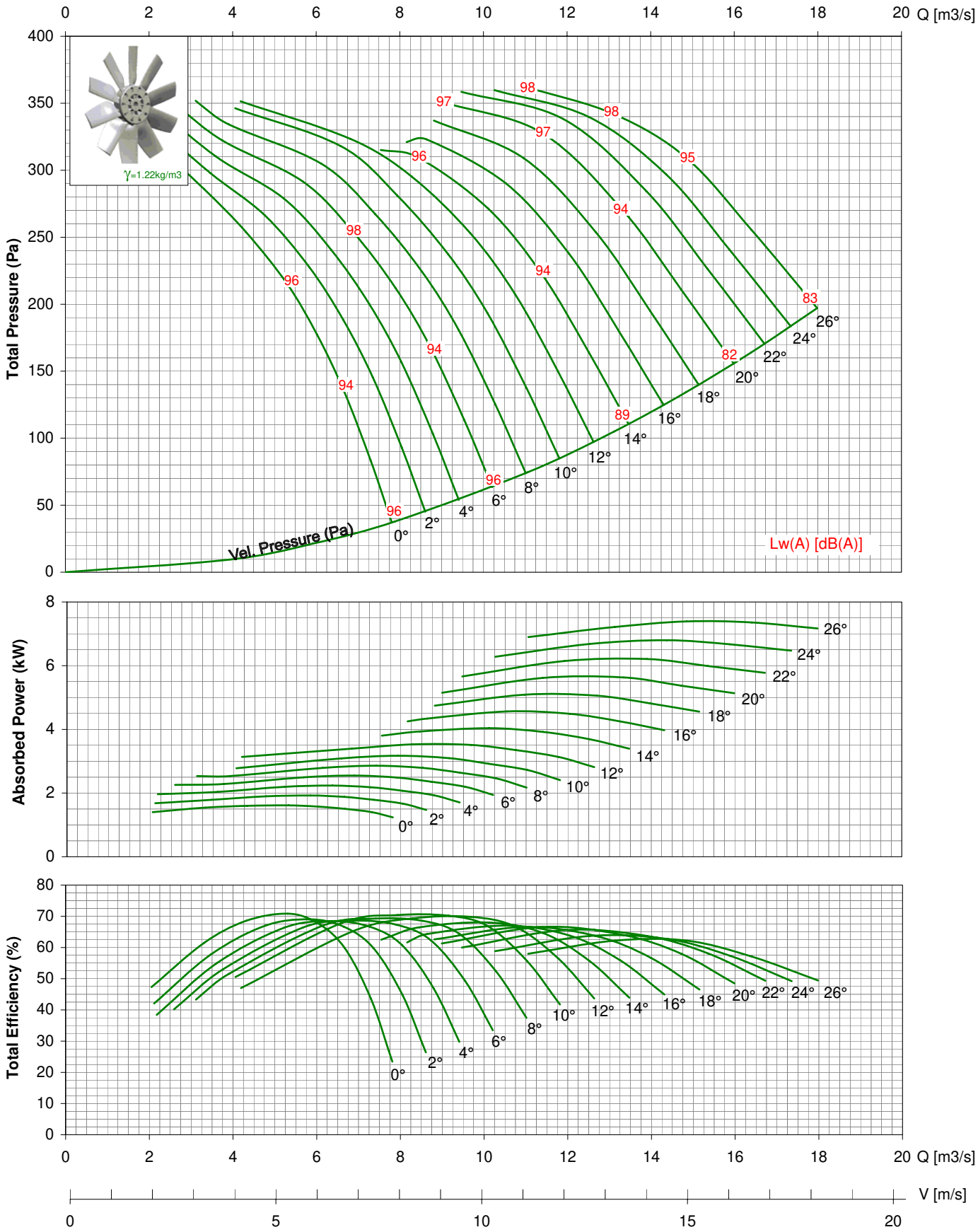

- Performance certified is for installation type D - ducted inlet, ducted outlet. Performance ratings do not include the effects of appurtenances (accessories).
- Power ratings (kW) does not include transmission losses.
- The A-weighted sound ratings shown have been calculated per AMCA Standard 301. Values shown are for inlet Lwi(A) sound power level for installation type D - ducted inlet, ducted outlet, rating include the effect of duct end correction.
- The AMCA Certified Ratings Seal applies to air performance only. dBA levels are not licensed by AMCA international.

TDA 1120-V / 14AA/ 12-12/ _ _ / _
1150rpm - 60Hz

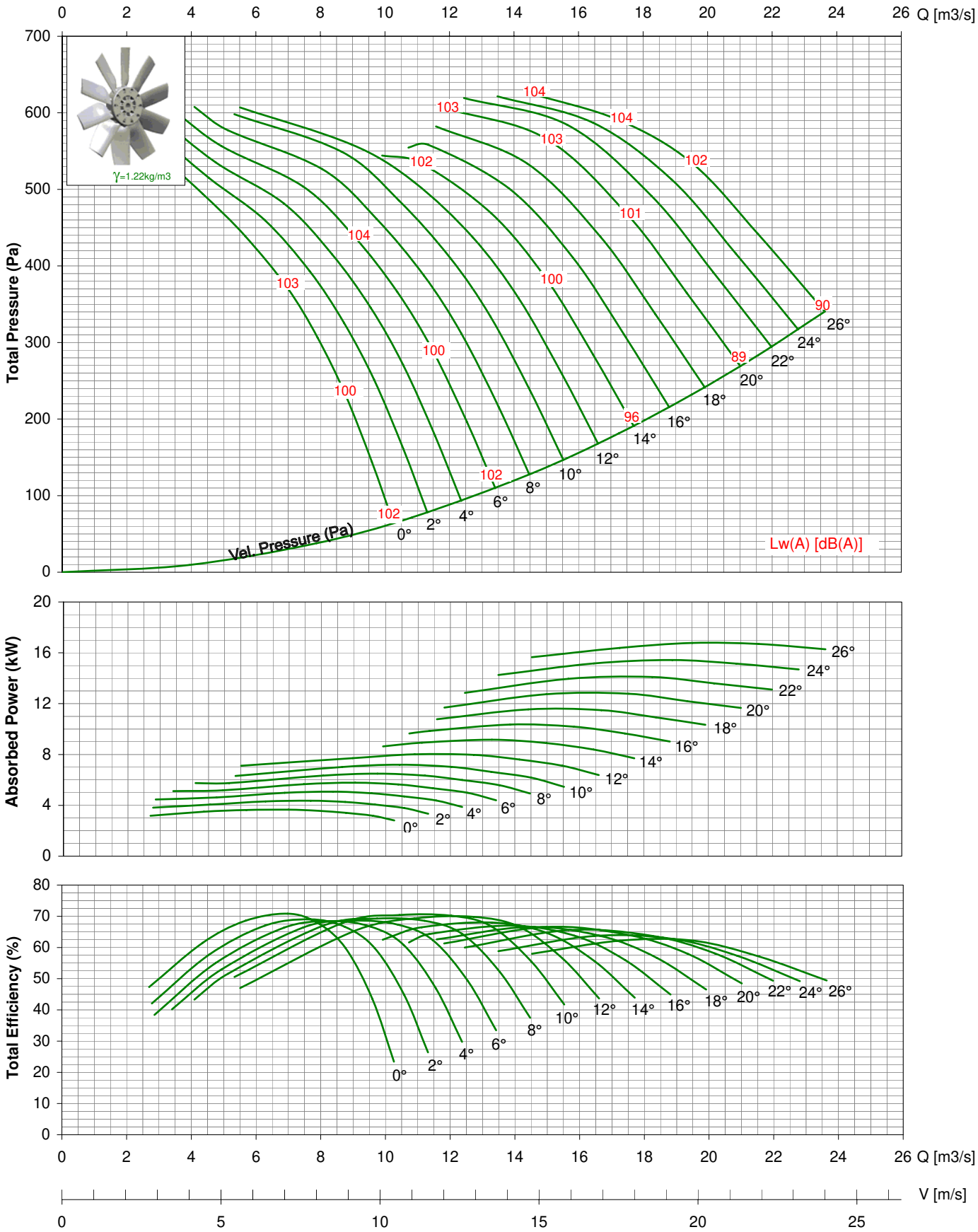

- Performance certified is for installation type D - ducted inlet, ducted outlet. Performance ratings do not include the effects of appurtenances (accessories).
- Power ratings (kW) does not include transmission losses.
- The A-weighted sound ratings shown have been calculated per AMCA Standard 301. Values shown are for inlet Lwi(A) sound power level for installation type D - ducted inlet, ducted outlet, rating include the effect of duct end correction.
- The AMCA Certified Ratings Seal applies to air performance only. dBA levels are not licensed by AMCA international.

KRUGER GROUP (VENTILATION)

- **THAILAND (Regional HQ)**

KRUGER VENTILATION INDUSTRIES ASIA CO. LTD.
30/159 Moo 1, Sinsakorn Industrial Estate,
Chetsadawithi Road, Khok Kham Mueng, Samuthsakorn 74000, Thailand
Tel. +662 1054298 - Fax +662 0248256-9
Website: www.krugerfan.com

- **CHINA (GUANGZHOU)**

GUANGZHOU KRUGER VENTILATION CO. LTD
No. 9 Huahui Road, Huashan, Huadu,
Guangzhou, P.R. China 510880
Tel. +86 20-66356635 - Fax +86 20-86786001/86786500
Email: kgv@krugerfan.com.cn

- **CHINA (TIANJIN)**

TIANJIN KRUGER VENTILATION CO. LTD
No.168 Anyuan Road, Jingjin Science and Technology Park
Wuqing District, Tianjin, China
Tel. +86 22-22143480/3481 - Fax +86 22-22143482
Email: ktj@krugerfan.com.cn

- **HONG KONG**

KRUGER VENTILATION (HONG KONG) LIMITED
Flat C, 9/F, Yeung Yiu Chung (No.8) Industrial Building,
20 Wang Hoi Road, Kowloon Bay, Kowloon, Hong Kong
Tel. +852 22469182 - Fax +852 22469187
Email: info@kruger.com.hk

- **INDONESIA**

P.T. KRUGER VENTILATION INDONESIA
JL. Teuku Umar No.20, RT, 001/RW. 001.
Karawaci - Tangerang 15115, Indonesia
Tel. +62 21-5512288/5513557/5513576/5514353
Fax. +62 21-5513502
Email: mktg@krugerindo.co.id

- **MALAYSIA**

KRUVENT INDUSTRIES (M) SDN BHD
Lot 850, Jalan Subang 7, Taman Perindustrian Subang,
47500, Subang Jaya, Selangor D.E.
Tel. +603 80743399 - Fax +603 80743388
Email: mktg@kruger.com.my

- **SINGAPORE**

KRUGER ENGINEERING PTE LTD
2 Venture Drive #20-23, Vision Exchange,
Singapore 608526.
Tel. +65 68631191 - Fax +65 68631151
Email: mktg@krugerfan.com

- **VIETNAM**

KRUGER VENTILATION INDUSTRIES (VIETNAM) CO. LTD
Lot A7. 2-4, C2 Road, Thanh Thanh Cong IZ,
Trang Bang Dist. Tay Ninh Province, Vietnam
Tel. +84-276 3585200/01/02 - Fax +84-276 3585199
Email: mktg@krugervn.com

- **AUSTRALIA**

S&P-KRUGER AUSTRALIA PTY LTD
2 Cunningham St, Moorebank N.S.W. 2170
Tel. +61 2-98227747
Fax. +61 2-98227757
Email: info@sandpkruger.com.au

- **CHINA (SHANGHAI)**

SHANGHAI KRUGER VENTILATION CO. LTD
No. 500 Yuanguo Road, Anting, Jiading,
Shanghai 201814 P.R. China
Tel. +86 21-69573266 - Fax +86 21-69573296
Email: ksh@krugerfan.com.cn

- **CHINA (WUHAN)**

WUHAN KRUGER VENTILATION CO. LTD
No. 805, Huian Ave, Dongxihu District, Wuhan, Hubei, P.R. China 430000
Tel. +86 27- 83248840
Fax +86 27- 83261886
Email: kwv@krugerfan.com.cn

- **INDIA**

KRUGER VENTILATION INDUSTRIES (INDIA) PVT LTD
Kruger Centre, Mumbai-Nasik Highway,
Kalamgaon, Shahapur, Thane 421601, Maharashtra, India
Tel. +91 9960558899/9975577211 - Fax +91 2527 240075
Email: sales@krugerindia.com

- **KOREA**

NEOMATE CO. LTD
2-1010, Ace High Tech City B/D, 775 Gyeongin-ro,
Yeongdeungpo-gu, Seoul, Korea. Postal Code 07299
Tel. +82-2-2679-2052 - Fax. +82-2-2679-2174
Email: y7890@neomate.co.kr

- **PHILIPPINES**

KRUGER M&E INDUSTRIES CORPORATION
B3 Welborne Industria Park, Bancal,
Carmona, Cavite, Philippines 4116
Tel. +63 917 561 9088, +63 917 596 7288,
+63 917 712 84348, +63 917 306 8288
Email: mktg@krugerph.net

- **TAIPEI**

KRUGER VENTILATION (TAIWAN) CO. LTD
No. 157, Ping-an Rd, Hengfeng Village,
Dayuan Shiang Taoyuan County 337, Taiwan
Tel. +886 3-3859119 - Fax +886 3-3859118
Email: sales@krugertwn.com.tw

The company is always improving and developing its products, therefore the company reserves the right of making changes to the illustrated products.
Certified dimension can be provided upon request.

Edition 1
Printed in March 2026

Kruger Ventilation (Taiwan) Co., Ltd.
No. 157, Ping-an Rd, Hengfeng Village, Dayuan Shiang
Taoyuan County 337, Taiwan
Tel: +886 3-3859119 Fax: +886 3-3859118
Email: sales@krugertwn.com.tw
Website:www.krugerfan.com
CNo.-CAT015.E2.KTW March 2026