ALL-LITE

ECV-645

Extruded Aluminum Louver
6" deep • Vertical Blade

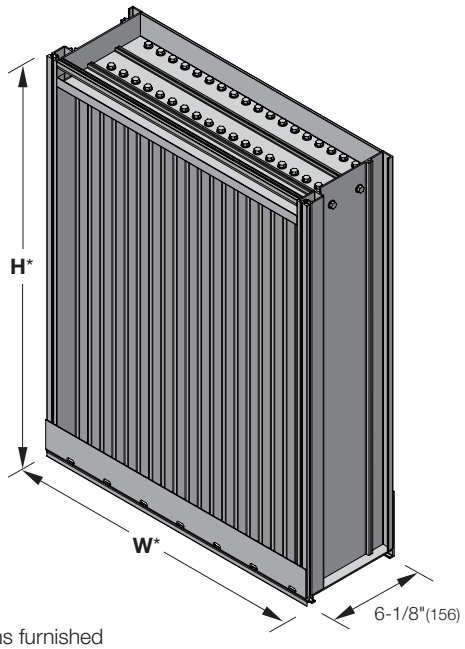

ECV-645
(standard)
*Louver dimensions furnished approximately 1/2" (13) undersize.

The ECV-645 is engineered and tested to withstand extreme loads, debris impact, and cyclic fatigue associated with the severe weather effects of hurricanes while maintaining maximum water infiltration resistance. For installation, the ECV-645 offers a continuous angle option. The ECV-645 is AMCA 540 and 550 listed, making it ideally suited for use in hurricane-prone and wind-borne debris regions as per the International Building Code

Standard Construction

Material: Mill finish 6063-T6 extruded aluminum

Frame: 6" deep x 0.081" thick (152 x 2) channel

Blades: 0.050" (1) thick vertical chevron style

Screen: 5/8" × 0.050" (15.9 × 1.3) expanded and flattened aluminum

Mullion: Visible

Minimum Size: 12" × 12" (305 × 305)

Maximum Size:

Single section: 60" × 120" (1524 × 3048)
120" × 60" (3048 × 1524)
Multiple section: Unlimited

Shipping Weight (approximate): 12 lbs/ft^2 (59 kg/m^2)

Ratings

Free Area: [48" × 48" (1219 × 1219) unit]: 8.4 ft^2 (0.78m^2)
52.6%

Performance @ Beginning Point of Water Penetration

Free Area Velocity: 1,250 fpm (6.35 m/s)

Air Volume Delivered: 10,525 cfm (4.97 m^3/s)

Pressure Loss: 0.47 in.wg. (116 Pa)

Velocity @ 0.15 in.wg. Pressure Loss: 698 fpm (3.54 m/s)

AMCA 540 (impact resistant, Enhanced protection) listed
AMCA 550 (high velocity rain resistant) listed

Std. Design Load: 150 psf

Options

- **Factory finish:**
  - High Performance Fluoropolymer
  - Prime Coat
  - Baked Enamel
  - Clear Anodize
  - Integral Color Anodize
- **Frame Options:**
  - 1-1/2" (38) flange frame
- **Installation Hardware**
  - Continuous angles
- **Alternate bird or insect screens**
- **Insulated or non-insulated blank-off panels**
- **Filter racks**
- **Head and/or sill flashing**
- **Frame closure**
- **Burglar bars**
- **Net OD (actual size)**

5 year warranty

Certified Ratings:
All-Lite certifies that the model ECV-645 shown herein is licensed to bear the AMCA seal. The ratings shown are based on test and procedures performed in accordance with AMCA Publication 511 and comply with the requirements of the AMCA Certified Ratings Program. The AMCA Certified Ratings seal applies to air performance, water penetration and wind-driven rain ratings.

amca INTERNATIONAL
www.amca.org

NOTE: Dimensions in parentheses ( ) are millimeters.
Information is subject to change without notice or obligation.

PERFORMANCE

ECV-645
Extruded Aluminum Louver
6" deep • Vertical Blade

Free Area (ft²)

Width (Inches)

Height (Inches)	12	18	24	30	36	42	48	54	60	66	72	78	84	90	96	102	108	114	120
12	**0.3**	0.4	0.6	0.8	0.9	1.1	1.3	1.5	1.6	1.8	2.0	2.1	2.3	2.5	2.7	2.8	3.0	3.2	3.3
18	0.5	**0.8**	1.1	1.5	1.8	2.1	2.5	2.8	3.1	3.5	3.8	4.1	4.5	4.8	5.1	5.4	5.8	6.1	6.4
24	0.7	1.2	**1.7**	2.2	2.7	3.2	3.7	4.1	4.6	5.1	5.6	6.1	6.6	7.1	7.6	8.1	8.5	9.0	9.5
30	1.0	1.6	2.2	**2.9**	3.6	4.2	4.9	5.5	6.1	6.8	7.4	8.1	8.7	9.4	10.0	10.7	11.3	12.0	12.6
36	1.2	2.0	2.8	3.6	**4.4**	5.2	6.0	6.8	7.6	8.4	9.2	10.1	10.9	11.7	12.5	13.3	14.1	14.9	15.7
42	1.4	2.4	3.3	4.3	5.3	**6.3**	7.2	8.2	9.1	10.1	11.1	12.1	13.0	14.0	14.9	15.9	16.8	17.8	18.8
48	1.7	2.8	3.9	5.0	6.2	7.3	**8.4**	9.5	10.6	11.8	12.9	14.0	15.2	16.3	17.4	18.5	19.6	20.7	21.9
54	1.9	3.2	4.4	5.7	7.1	8.3	9.6	**10.9**	12.1	13.4	14.7	16.0	17.3	18.6	19.8	21.1	22.4	23.7	25.0
60	2.1	3.6	5.0	6.4	7.9	9.4	10.8	12.2	**13.6**	15.1	16.5	18.0	19.4	20.9	22.3	23.7	25.2	26.6	28.1
66	2.3	3.9	5.4	7.0	8.6	10.1	11.7	13.2	14.8										
72	2.6	4.3	6.0	7.7	9.5	11.2	12.9	14.6	16.3										
78	2.8	4.7	6.5	8.4	10.3	12.2	14.1	15.9	17.8										
84	3.0	5.0	7.1	9.1	11.2	13.2	15.2	17.3	19.3										
90	3.3	5.4	7.6	9.8	12.1	14.3	16.4	18.6	20.8										
96	3.5	5.8	8.2	10.5	13.0	15.3	17.6	20.0	22.3										
102	3.7	6.2	8.7	11.2	13.8	16.3	18.8	21.3	23.8										
108	4.0	6.6	9.3	11.9	14.7	17.3	20.0	22.6	25.3										
114	4.2	7.0	9.8	12.6	15.6	18.4	21.2	24.0	26.8										
120	4.4	7.4	10.4	13.3	16.4	19.4	22.4	25.3	28.3										

amca INTERNATIONAL LISTED

HIGH VELOCITY RAIN RESISTANT WITH BLADES FULLY OPEN AND IMPACT RESISTANT LOUVER
Enhanced Protection Level E
See www.AMCA.org for all certified or listed products

This label does not signify AMCA airflow performance certification.

Listings:
All-Lite certifies that the model ECV-645 shown herein is approved to bear the AMCA International Listing Label. The ratings shown are based on tests and procedures performed in accordance with AMCA publications and comply with the requirements of the AMCA International Listing Label program. The AMCA International Listing Label applies to pressure cycle tested windborne debris impact resistant louvers rated for 'Enhanced Protection' and +/- 150 psf with a minimum blade span of 12" and a maximum unsupported blade span of 60", and to high velocity wind driven rain (HVWDR) resistant louvers tested in the fully open position that permits airflow through the louver.

Water Penetration

AMCA defines the beginning point of water penetration as the free area velocity at the intersection of a simple linear regression of test data and the line of 0.01 ounces of water per square foot of free area measured through a 48" x 48" louver during a 15 minute period. The AMCA water penetration test provides a method for comparing louver models and designs as to their efficiency in resisting the penetration of rainfall under specific lab conditions. We recommend that intake louvers are selected with a reasonable margin of safety below the beginning point of water penetration in order to avoid unwanted penetration during severe storm conditions.

Beginning Point of Water Penetration = 1,250 fpm

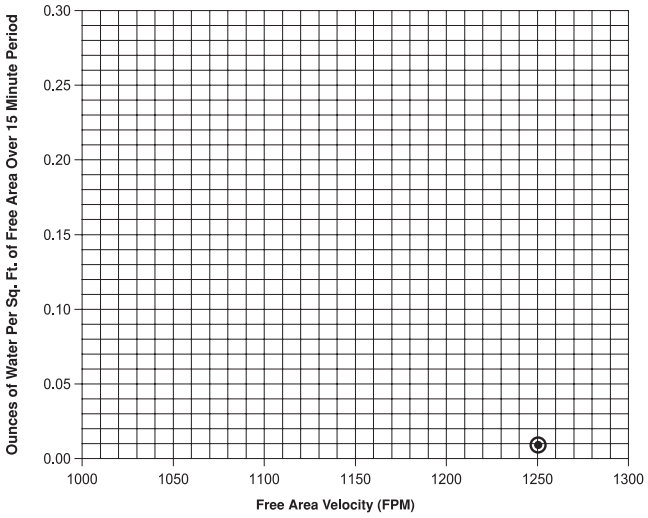

Pressure Loss

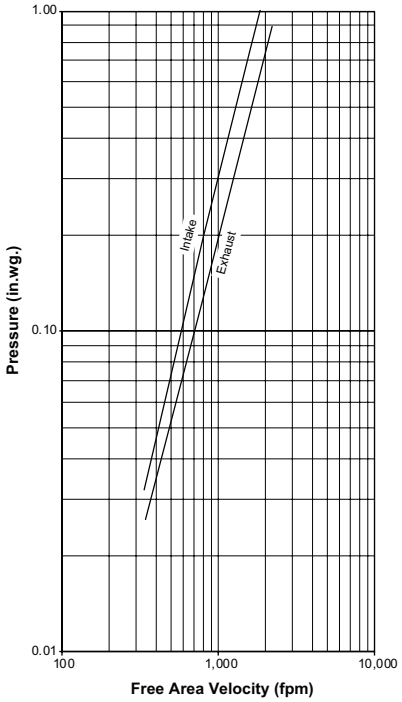

Louver Test Size = 48" x 48" (1219 x 1219)
Pressure loss tested in accordance with Figure 5.5 of AMCA Standard 500-L. Data corrected to standard air density.

PERFORMANCE

Wind Driven Rain Performance - AMCA 500L Wind-Driven Rain Test

Wind Velocity	Rainfall	Airflow cfm (m^3/s)	Core Velocity[1] fpm (m/s)	Free Area Velocity[2] fpm (m/s)	Effectiveness Ratio	Wind-Driven Rain Penetration Class
50 mph	8 in/hr	10,154 (4.8)	943 (4.8)	1,638 (8.3)	100.0%	A

NOTE:
1. Core area is the open area of the louver face (face area less louver frame). Core velocity is the airflow divided by core area. Test louver core area is 10.77 ft^2 (1 m^2).

2. Free area velocity is the airflow divided by free area. Test louver free area is 6.2 ft^2 (0.58 m^2).

Wind Driven Rain

Class	Effectiveness
A	99% and above
B	95% to 98.9%
C	80% to 94.9%
D	below 80%

Attributes

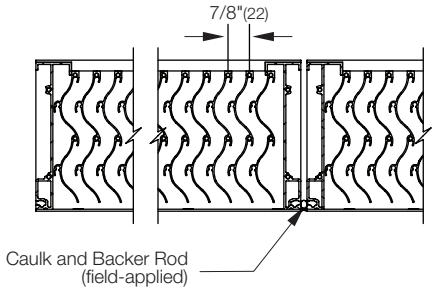

Visible Vertical Mullion
(standard)

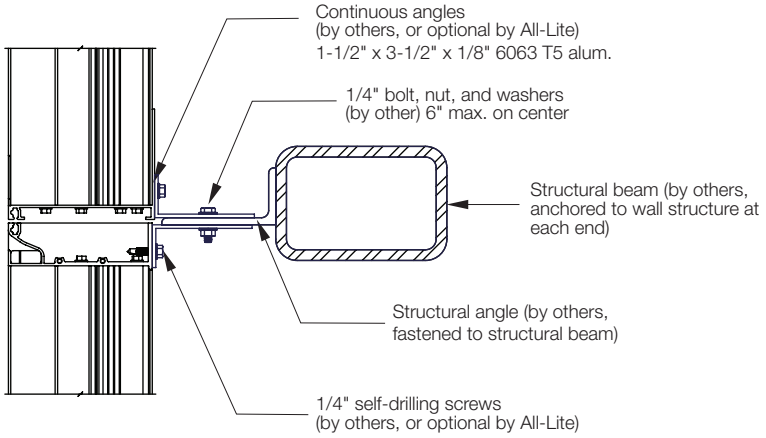

Horizontal Mullion
(standard)

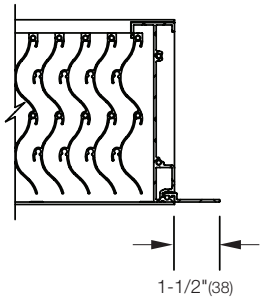

Flange Frame
(optional)

Supplemental Options

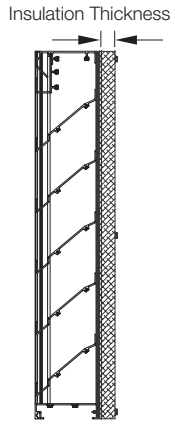

Blank-Off Options
Non-Insulated and Gasketed
1" Insulated (4.25 R-value)
2" Insulated (8.75 R-value)

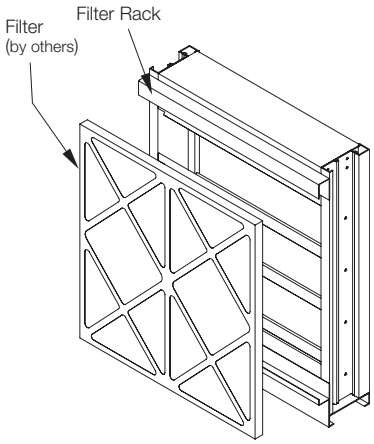

Filter Rack

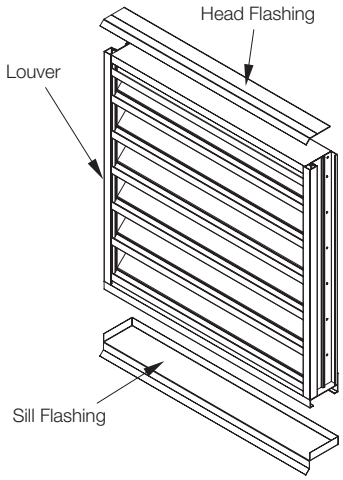

Flashing Options
Head and Sill Available