# POTTORFF®

# ECD-545-MD

Extruded Aluminum Louver
5" deep • 45° Horizontal Drainable Blade

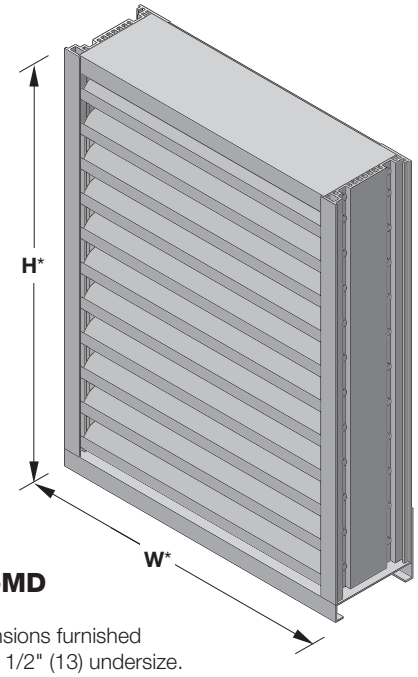


**ECD-545-MD**
(standard)
*Louver dimensions furnished approximately 1/2" (13) undersize.

*The ECD-545-MD is engineered and tested to withstand extreme loads, debris impact, and cyclic fatigue associated with the severe weather effects of hurricanes (Miami-Dade County approval #22-0131.03). When combined with the optional factory-attached CD-51 damper in the closed position, the ECD-545-MD also protects against high-velocity wind-driven rain per AMCA 550 and TAS 100A. For installation, the ECD-545-MD is available either with standard continuous angles or with an optional factory installed sleeve which eliminates the need for direct anchorage to the substrate. The ECD-545-MD is AMCA 540 listed, making it ideally suited for use in hurricane-prone and wind borne debris regions per the International Building Code.*

## Ratings

**Free Area:** [48" × 48" (1219 × 1219) unit]: 6.7 $ft^2$ (0.62 $m^2$) 41.9%

**Performance @ Beginning Point of Water Penetration**

**Free Area Velocity:** Above 1,250 fpm (6.35 m/s)

**Air Volume Delivered:** Above 8,388 cfm (3.96 $m^3$/s)

**Pressure Loss:** 0.21 in.wg. (52 Pa)

**Velocity @ 0.15 in.wg. Pressure Loss:** 1,057 fpm (5.37 m/s)

**AMCA 540 (impact resistance, Enhanced Protection - Level E) listed**

**AMCA 550 (high velocity rain resistant) listed**
(Applies when the CD-51 damper option is utilized and the damper is in the closed position.)

**Miami Dade County:** NOA No. 22-0131.03 (Expires 10/23/2023)Approved to FBC TAS202-94, TAS201-94 and TAS20394. Approved for FBC TAS 100(A)-95 when CD-51damper option is specified.

**Florida Building Code Approval (2020-FBC):** No. FL17876.1

**Texas Department of Insurance Listed (TDI)**

**Design Load:** 150 psf

## Standard Construction

**Material:** Mill finish 6063-T5 extruded aluminum

**Frame:** 5" deep × 0.125" thick (127 × 3) channel

**Blades:** 45° × 0.063" (1.6) thick horizontal chevron style

**Screen:** 1/2" × 0.063" (12.7 × 1.6) expanded and flattened aluminum

**Mullion:** Visible

**Minimum Size:** 6" × 6" (152 × 152)
12" × 14" (305 × 356) with CD-51 option

**Maximum Size:**

Single section: 60" × 144" (1524 × 3658) or 72" × 120" (1829 × 3048)
Multiple section: Unlimited width × 144" (3658) or 72" (1829) × unlimited height

**Installation Hardware:** Standard continuous angles and associated fasteners (anchors to substrate by others - refer to installation instructions)

## Options

- **Full Sleeve and Retaining Angles** (eliminates need for anchors to substrate; 1-1/2" (38) flange frame required)
- **Factory finish:**
  - High Performance Fluoropolymer
  - Prime Coat
  - Baked Enamel
  - Clear Anodize
  - Integral Color Anodize
- **Frame Options:**
  - 1-1/2" (38) flange frame
- **Alternate bird or insect screens**
- **Insulated or non-insulated blank-off panels**
- **Filter racks**
- **Head and/or sill flashing**
- **Burglar bars**
- **CD-51 Damper**

5 year warranty

**NOTE:** Dimensions in parentheses ( ) are millimeters.
Information is subject to change without notice or obligation.

# PERFORMANCE

# ECD-545-MD

Extruded Aluminum Louver
5" deep • 45° Horizontal Drainable Blade

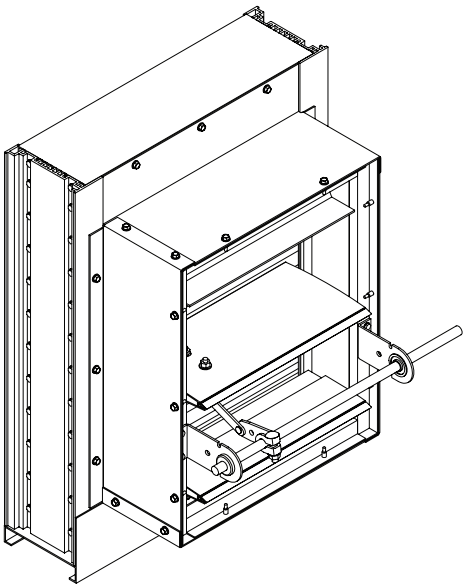

**Rear View w/CD-51**
(optional)

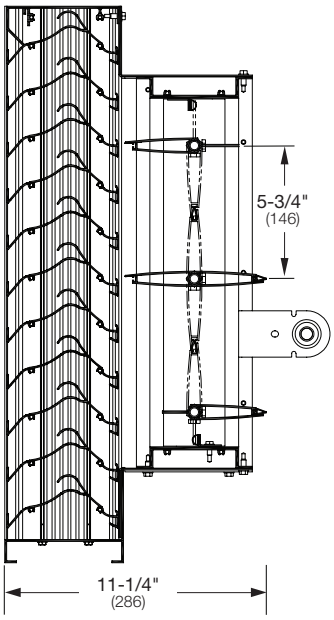


**Vertical Section w/CD-51**
(optional)

**Certified Ratings:**
Pottorff certifies that the model ECD-545-MD shown herein is licensed to bear the AMCA seal. The ratings shown are based on test and procedures performed in accordance with AMCA Publication 511 and comply with the requirements of the AMCA Certified Ratings Program. The AMCA Certified Ratings seal applies to air performance, water penetration and wind-driven rain ratings.

HIGH VELOCITY RAIN RESISTANT WITH BLADES FULLY CLOSED AND IMPACT RESISTANT LOUVER
*Enhanced Protection Level E*
*See www.AMCA.org for all certified or listed products*

This label does not signify AMCA airflow performance certification.

**Certified Ratings:**
Pottorff certifies that the model ECD-545-MD shown herein is approved to bear the AMCA listing label. The ratings shown are based on tests and procedures performed in accordance with AMCA publications and comply with the requirements of the AMCA listing label program. The AMCA listing label applies to high velocity rain and impact resistance.

## Free Area (ft²)

Width (Inches)

| Height (Inches) | 6 | 12 | 18 | 24 | 30 | 36 | 42 | 48 | 54 | 60 | 66 | 72 |
|---|---|---|---|---|---|---|---|---|---|---|---|---|
| **6** | **0.00** | 0.01 | 0.0 | 0.0 | 0.0 | 0.0 | 0.0 | 0.0 | 0.0 | 0.0 | 0.0 | 0.0 |
| **12** | 0.0 | **0.2** | 0.3 | 0.5 | 0.6 | 0.7 | 0.9 | 1.0 | 1.1 | 1.3 | 1.4 | 1.5 |
| **18** | 0.1 | 0.4 | **0.6** | 0.9 | 1.1 | 1.4 | 1.7 | 1.9 | 2.2 | 2.5 | 2.7 | 3.0 |
| **24** | 0.1 | 0.5 | 0.9 | **1.3** | 1.7 | 2.1 | 2.5 | 2.9 | 3.3 | 3.7 | 4.1 | 4.4 |
| **30** | 0.2 | 0.7 | 1.2 | 1.8 | **2.3** | 2.8 | 3.3 | 3.9 | 4.4 | 4.9 | 5.4 | 5.9 |
| **36** | 0.2 | 0.9 | 1.5 | 2.2 | 2.8 | **3.5** | 4.1 | 4.8 | 5.5 | 6.1 | 6.8 | 7.4 |
| **42** | 0.3 | 1.0 | 1.8 | 2.6 | 3.4 | 4.2 | **5.0** | 5.8 | 6.5 | 7.3 | 8.1 | 8.9 |
| **48** | 0.3 | 1.2 | 2.1 | 3.1 | 4.0 | 4.9 | 5.8 | **6.7** | 7.6 | 8.5 | 9.5 | 10.4 |
| **54** | 0.3 | 1.4 | 2.4 | 3.5 | 4.5 | 5.6 | 6.6 | 7.7 | **8.7** | 9.8 | 10.8 | 11.9 |
| **60** | 0.4 | 1.6 | 2.7 | 3.9 | 5.1 | 6.3 | 7.4 | 8.6 | 9.8 | **11.0** | 12.2 | 13.3 |
| **66** | 0.4 | 1.7 | 3.0 | 4.3 | 5.7 | 7.0 | 8.3 | 9.6 | 10.9 | 12.2 | **13.5** | 14.8 |
| **72** | 0.5 | 1.9 | 3.3 | 4.8 | 6.2 | 7.7 | 9.1 | 10.5 | 12.0 | 13.4 | 14.9 | **16.3** |
| **78** | 0.5 | 2.1 | 3.7 | 5.2 | 6.8 | 8.3 | 9.9 | 11.5 | 13.0 | 14.6 | 16.2 | 17.8 |
| **84** | 0.6 | 2.3 | 4.0 | 5.6 | 7.3 | 9.0 | 10.7 | 12.4 | 14.1 | 15.8 | 17.6 | 19.3 |
| **90** | 0.6 | 2.4 | 4.3 | 6.1 | 7.9 | 9.7 | 11.6 | 13.4 | 15.2 | 17.0 | 18.9 | 20.7 |
| **96** | 0.7 | 2.6 | 4.6 | 6.5 | 8.5 | 10.4 | 12.4 | 14.3 | 16.3 | 18.2 | 20.3 | 22.2 |
| **102** | 0.7 | 2.8 | 4.9 | 6.9 | 9.0 | 11.1 | 13.2 | 15.3 | 17.4 | 19.5 | 21.6 | 23.7 |
| **108** | 0.7 | 3.0 | 5.2 | 7.4 | 9.6 | 11.8 | 14.0 | 16.2 | 18.5 | 20.7 | 23.0 | 25.2 |
| **114** | 0.8 | 3.1 | 5.5 | 7.8 | 10.2 | 12.5 | 14.8 | 17.2 | 19.5 | 21.9 | 24.3 | 26.7 |
| **120** | 0.8 | 3.3 | 5.8 | 8.2 | 10.7 | 13.2 | 15.7 | 18.1 | 20.6 | 23.1 | 25.7 | 28.1 |
| **126** | 0.9 | 3.5 | 6.1 | 8.7 | 11.3 | 13.9 | 16.5 | 19.1 | 21.7 | 24.3 | | |
| **132** | 0.9 | 3.6 | 6.4 | 9.1 | 11.8 | 14.6 | 17.3 | 20.1 | 22.8 | 25.5 | | |
| **138** | 1.0 | 3.8 | 6.7 | 9.5 | 12.4 | 15.3 | 18.1 | 21.0 | 23.9 | 26.7 | | |
| **144** | 1.0 | 4.0 | 7.0 | 10.0 | 13.0 | 16.0 | 19.0 | 22.0 | 25.0 | 27.9 | | |

## Wind Driven Rain Performance - AMCA 500L Wind-Driven Rain Test

| Wind Velocity | Rainfall | Airflow cfm ($m^3/s$) | Core Velocity[1] fpm (m/s) | Free Area Velocity[2] fpm (m/s) | Effectiveness Ratio | Wind-Driven Rain Penetration Class |
|---|---|---|---|---|---|---|
| 29 mph | 3 in/hr | 7,361 (3.5) | 684 (3.5) | 1,511 (7.7) | 99.4% | A |
| 50 mph | 8 in/hr | 8,478 (4.0) | 787 (4.0) | 1,741 (8.8) | 96.0% | B |

**NOTE:**
1. Core area is the open area of the louver face (face area less louver frame). Core velocity is the airflow divided by core area. Test louver core area is 10.77 $ft^2$ (1 $m^2$).

2. Free area velocity is the airflow divided by free area. Test louver free area is 4.9 $ft^2$ (0.46 $m^2$).

**Wind Driven Rain**

| Class | Effectiveness |
|---|---|
| A | 99% and above |
| B | 95% to 98.9% |
| C | 80% to 94.9% |
| D | below 80% |

## Water Penetration

AMCA defines the beginning point of water penetration as the free area velocity at the intersection of a simple linear regression of test data and the line of 0.01 ounces of water per square foot of free area measured through a 48" x 48" louver during a 15 minute period. The AMCA water penetration test provides a method for comparing louver models and designs as to their efficiency in resisting the penetration of rainfall under specific lab conditions. We recommend that intake louvers are selected with a reasonable margin of safety below the beginning point of water penetration in order to avoid unwanted penetration during severe storm conditions.

**Beginning Point of Water Penetration = Above 1,250 fpm**

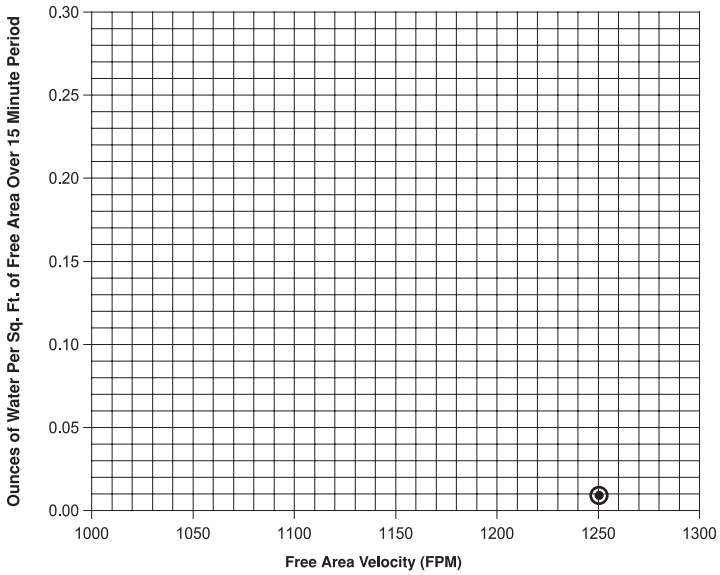


## Pressure Loss

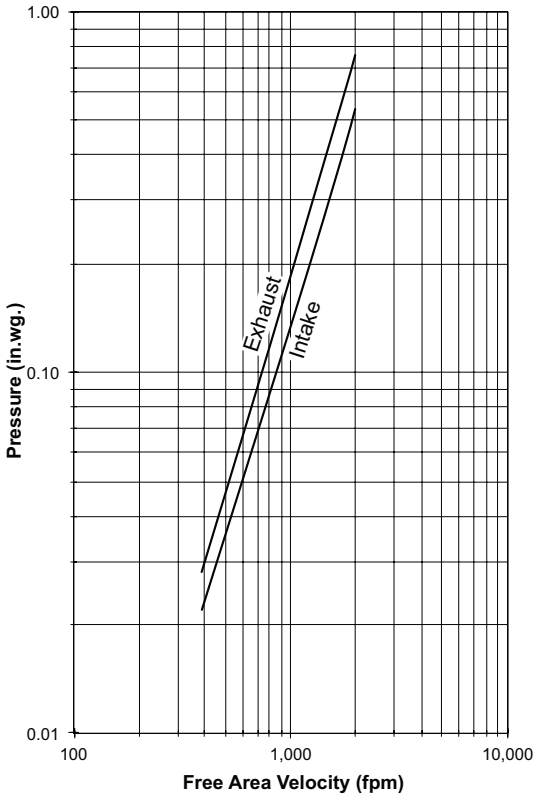


Louver Test Size = 48" x 48" (1219 x 1219)
Pressure loss tested in accordance with Figure 5.5 of AMCA Standard 500-L. Data corrected to standard air density.

# ECD-545-MD

Extruded Aluminum Louver
5" deep • 45° Horizontal Drainable Blade

## Attributes

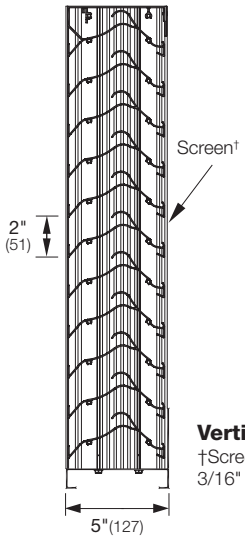


**Vertical Section**
†Screen adds approximately 3/16" (5) to louver depth

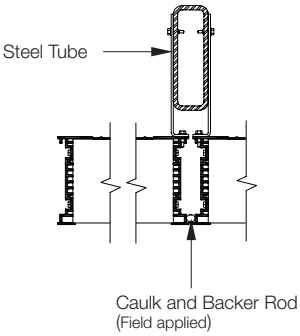


**Visible Vertical Mullion**
(standard)

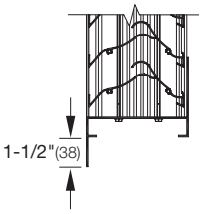


**Flange Frame**
(optional)

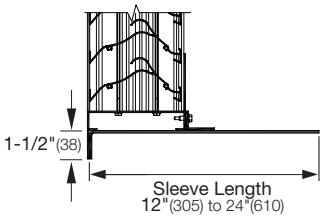


**Sleeve**
(optional)

## Supplemental Options

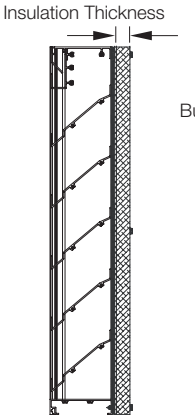


**Blank-Off Options**
Non-Insulated and Gasketed
1" Insulated (4.25 R-value)
2" Insulated (8.75 R-value)

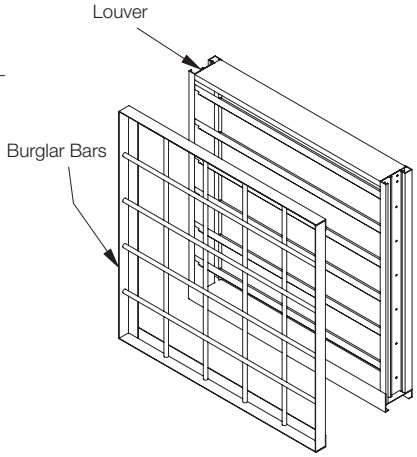


**Burglar Bars**
Shipped Loose or Mounted

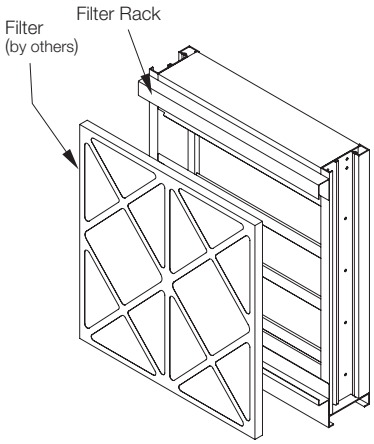


**Filter Rack**

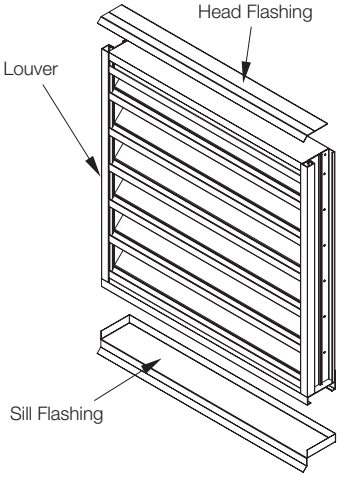


**Flashing Options**
Head and Sill Available