COMMERCIAL HIGH PERFORMANCE 10
Electric Heated Air Curtain
Data Sheet

For Mounting Heights To 10' (environmental separation)

STANDARD CONSTRUCTION

- 14" high x 15" deep
- 1/2 hp three speed motor(s)
- Factory installed fan speed/heat switch
- White or black aluminum exterior cover
  (Optional: Custom Color or Stainless)
- Wall & Top Mounting
- Optional: Filter (washable)
- Patented venturi open helical element with point suspension
  - Thermal overload protection
  - Galvanized steel frame
- Alternate kW: see sheet EP-112

Energy Codes ASHRAE 90.1-2019, IECC 2018, and ASHRAE 189.1 vestibule exception validated by AMCA certification.
Refer to Velocity Projection Chart below for information.

Berner International certifies that the air curtains shown herein are licensed to bear the AMCA Seal. The ratings shown are based on tests and procedures performed in accordance with AMCA Publication 211 and comply with the requirements of the AMCA Certified Ratings Program. Rated data shown is for base (electric heated) units. The AMCA Certified Ratings Seal applies to airflow rate, average outlet velocity, outlet velocity uniformity, velocity projection and power rating at free delivery only.

Models CHD10-1060E, CHD10-2108E and CHD10-2120E are not licensed to bear the AMCA seal.

2 Year Limited Warranty

Made in USA

c UL us

FDA RECOMMENDED

USDA COMPLIANCE

MODEL	Nozzle Width (in)	Max Vel. at Nozzle (fpm)	Avg. Outlet Vel. (fpm)	Air Volume (cfm)	Outlet Vel. Uniformity	Power Rating (kW)	Motor(s) @ hp	Max Electric Capacity (kW)	Heater Output (MBH)	Air Temp. Rise (°F)	Net Wt. (lbs)
CHD10-1036E	36.00	3,284	1,928	1,687	70%	0.73	1 @ 1/2	14.0	47.8	26°	52
CHD10-1042E	42.00	3,592	1,727	1,763	50%	0.77	1 @ 1/2	14.0	47.8	25°	55
CHD10-1048E	48.00	3,614	1,473	1,718	38%	0.69	1 @ 1/2	14.0	47.8	26°	56
CHD10-1060E	*60.00*	*3,319*	*1,119*	*1,632*	*45%*	*0.66*	*1 @ 1/2*	*14.0*	*47.8*	*27°*	*63*
CHD10-2060E	60.00	3,711	1,788	2,607	59%	1.22	2 @ 1/2	21.0	71.7	25°	96
CHD10-2072E	72.00	3,284	1,928	3,374	70%	1.45	2 @ 1/2	28.0	95.6	26°	104
CHD10-2084E	87.00	3,592	1,667	3,526	50%	1.54	2 @ 1/2	28.0	95.6	25°	110
CHD10-2096E	99.00	3,614	1,428	3,436	38%	1.38	2 @ 1/2	28.0	95.6	26°	112
CHD10-3096E	99.00	3,284	1,785	4,294	59%	1.95	3 @ 1/2	35.0	119.5	26°	148
CHD10-2108E	*111.00*	*3,319*	*1,242*	*3,350*	*38%*	*1.35*	*2 @ 1/2*	*28.0*	*95.6*	*26°*	*119*
CHD10-3108E	111.00	3,284	1,876	5,061	70%	2.18	3 @ 1/2	42.0	143.3	26°	156
CHD10-2120E	*116.25*	*3,319*	*1,155*	*3,264*	*45%*	*1.32*	*2 @ 1/2*	*28.0*	*95.6*	*27°*	*126*
CHD10-3120E	116.25	3,284	1,818	5,137	50%	2.22	3 @ 1/2	42.0	143.3	26°	159

1. NOTE: Operation at 50 Hz will generate approximately a 17% reduction in air performance.
Berner does not recommend CHD10-1060E, CHD10-2108E & CHD10-2120E, exists only as an equivalent to competitors' models.

See sheet EP-112 for amp draws/total load requirements and alternate kW.

VELOCITY PROJECTION: *Model CHD10-1036E*					
Distance from Nozzle (in)	40	80	120	160	200
Core Velocity (fpm)	3260	1930	1530	1230	1140
Uniformity (%)	84	92	96	89	93

MODEL NUMBER CONFIGURATION

CHD10-1 036 E B-140-R-SS

Series	# of Motors	Opening Width	Heat	Voltage	Standard kW	Opt. Switch	Cabinet Finish
CHD10	1, 2, 3	036" - 120"	E=Electric Heated	*B=208/1/60 *J=240/1/60 *V=220/1/50 K=120/480 L=120/600 S=208/480 U=240/480 M=208/600 N=240/600 X=208/3/60 Y=240/3/60 Z=480/3/60 Q=600/3/60 O=380/3/50	14.0 - 42.0 (140 - 420)	Remote Switch	White *(leave blank)* BK=Black
							Opt. Cabinet Finish
							SS=Stainless Steel CC=Custom Color

See sheet EP-112 for alternate kW code

for Standard offering, leave options (Opt.) blank make sure to specify Cabinet Finish if other than white

*Max 15kW

See sheet EP-112 for available lengths and voltages

Sound level measured 10' (3m) from the unit in free field:

1 motor:	Low/Medium/High Speed:	64/65/66 dBA
2 motors 60":	Low/Medium/High Speed:	66/67/68 dBA
2 motors:	Low/Medium/High Speed:	67/68/69 dBA
3 motors:	Low/Medium/High Speed:	69/70/71 dBA

Berner reserves the right to alter specifications without prior notice.

www.berner.com **Berner International** **800.245.4455**
111 Progress Ave. / New Castle / PA / 16101 / USA

DS-112D
November, 2022

©Copyright, 2022 Berner International

COMMERCIAL HIGH PERFORMANCE 10
Electric Heated Air Curtain
Electrical Performance Sheet

			208/1/60 (voltage code B) MOTOR AMP DRAW = 3.5 each		240/1/60 (voltage code J) or 220/1/50 (voltage code V) MOTOR AMP DRAW = 3.5 each		208/3/60 (voltage code X) MOTOR AMP DRAW = 3.5 each		240/3/60 (voltage code Y) MOTOR AMP DRAW = 3.5 each	
MODEL	kW (code)	Temp Rise °F	# CKTS	AMPS PER CIRCUIT (including motor)	BREAKER RATING PER CIRCUIT	# CKTS	AMPS PER CIRCUIT (including motor)	BREAKER RATING PER CIRCUIT	# CKTS	AMPS PER CIRCUIT (including motor)	BREAKER RATING PER CIRCUIT	# CKTS	AMPS PER CIRCUIT (including motor)	BREAKER RATING PER CIRCUIT
CHD10-1036E CHD10-1042E CHD10-1048E CHD10-1060E	14 (140)	25	2	26.0/44.9	35/60	2	23.0/38.9	30/50	1	42.4	60	1	37.2	50
	10 (100)	18	2	19.5/32.0	25/40	1	45.2	60	1	31.3	40	1	27.6	35
	8 (080)	14	1	42.0	60	1	36.8	50	1	25.7	35	1	22.7	30
	6 (060)	11	1	32.3	45	1	28.5	40	1	20.2	30	1	17.9	25
CHD10-2060E	21 (210)	25	-	N/A	N/A	-	N/A	N/A	2	26.4/38.9	35/50	2	23.8/33.7	30/45
	15 (150)	18	2	31.0/48.1	40/60	2	27.8/41.7	35/60	1	48.6	60	1	43.1	60
	12 (120)	14	2	26.2/38.5	35/50	2	23.7/33.3	30/45	1	40.3	50	1	35.9	45
	9 (090)	11	2	21.4/28.8	30/40	1	44.5	60	1	32.0	40	1	28.7	35
CHD10-2072E CHD10-2084E CHD10-2096E CHD10-2108E CHD10-2120E	28 (280)	25	-	N/A	N/A	-	N/A	N/A	2	45.9/38.9	60/50	2	40.7/33.7	50/45
	20 (200)	18	-	N/A	N/A	2	N/A	N/A	2	34.8/27.8	45/35	2	31.1/24.1	40/35
	16 (160)	14	2	45.5/38.5	60/50	2	40.3/33.3	50/45	2	29.2/22.2	40/30	1	45.5	60
	12 (120)	11	2	35.8/28.8	45/40	2	32.0/25.0	40/35	1	40.3	50	1	35.9	45
CHD10-3096E	35 (350)	25	-	N/A	N/A	-	N/A	N/A	3	29.9/38.9/38.9	40/50/50	3	27.3/33.7/33.7	35/45/45
	25 (250)	18	-	N/A	N/A	-	N/A	N/A	2	38.3/41.6	50/60	2	34.6/36.1	45/50
	20 (200)	14	-	N/A	N/A	-	N/A	N/A	2	32.7/33.3	40/45	2	29.7/28.9	40/40
	15 (150)	11	2	39.3/43.3	50/60	2	35.5/37.5	45/50	2	27.2/25.0	35/35	2	24.9/21.7	30/30
CHD10-3108E CHD10-3120E	42 (420)	25	-	N/A	N/A	-	N/A	N/A	3	49.4/38.9/38.9	60/50/50	3	44.2/33.7/33.7	60/45/45
	30 (300)	18	-	N/A	N/A	-	N/A	N/A	3	38.3/27.8/27.8	50/35/35	2	34.6/48.1	45/60
	24 (240)	14	-	N/A	N/A	-	N/A	N/A	2	32.7/44.4	40/60	2	29.7/38.5	40/50
	18 (180)	11	-	N/A	N/A	-	N/A	N/A	2	27.2/33.3	35/45	2	24.9/28.9	30/40

Berner reserves the right to alter specifications without prior notice.

www.berner.com **Berner International** **800.245.4455**
111 Progress Ave. / New Castle / PA / 16101 / USA

EP-112
October, 2017

©Copyright, 2017 Berner International

			480/3/60 (voltage code Z) MOTOR AMP DRAW = 1.4 each		600/3/60 (voltage code Q) MOTOR AMP DRAW = 1.0 each			380/3/50 (voltage code O) MOTOR AMP DRAW = 3.5 each		
MODEL	kW (code)	Temp Rise °F	# CKTS	AMPS PER CIRCUIT (including motor)	BREAKER RATING PER CIRCUIT	# CKTS	AMPS PER CIRCUIT (including motor)	BREAKER RATING PER CIRCUIT	# CKTS	AMPS PER CIRCUIT (including motor)	BREAKER RATING PER CIRCUIT
CHD10-1036E CHD10-1042E CHD10-1048E CHD10-1060E	14 (140)	25	1	18.2	25	1	14.5	20	1	24.8	35
	10 (100)	18	1	13.4	20	1	10.6	15	1	18.7	25
	8 (080)	14	1	11.0	15	1	8.7	15	1	15.7	20
	6 (060)	11	1	8.6	15	1	6.8	15	1	12.6	20
CHD10-2060E	21 (210)	25	1	28.1	35	1	22.2	30	1	38.9	50
	15 (150)	18	1	20.8	30	1	16.4	25	1	29.8	40
	12 (120)	14	1	17.2	25	1	13.5	20	1	25.2	35
	9 (090)	11	1	13.6	20	1	10.7	15	1	20.7	25
CHD10-2072E CHD10-2084E CHD10-2096E CHD10-2108E CHD10-2120E	28 (280)	25	1	36.5	50	1	28.9	40	2	28.3/21.3	35/30
	20 (200)	18	1	26.9	35	1	21.2	30	1	37.4	50
	16 (160)	14	1	22.0	30	1	17.4	25	1	31.3	40
	12 (120)	11	1	17.2	25	1	13.5	20	1	25.2	35
CHD10-3096E	35 (350)	25	1	46.3	60	1	36.7	50	2	31.8/31.9	40/40
	25 (250)	18	1	34.3	45	1	27.1	35	1	48.5	60
	20 (200)	14	1	28.3	35	1	22.2	30	1	40.9	50
	15 (150)	11	1	22.2	30	1	17.4	25	1	33.3	40
CHD10-3108E CHD10-3120E	42 (420)	25	2	21.0/33.7	30/45	1	43.4	60	2	31.8/42.5	40/60
	30 (300)	18	1	40.3	50	1	31.9	40	2	25.7/30.4	35/40
	24 (240)	14	1	33.1	45	1	26.1	35	1	47.0	60
	18 (180)	11	1	25.9	35	1	20.3	25	1	37.8	50

Berner reserves the right to alter specifications without prior notice.

www.berner.com Berner International 800.245.4455
111 Progress Ave. / New Castle / PA / 16101 / USA

EP-112
October, 2017

©Copyright, 2017 Berner International

MODEL	kW (code)	Temp Rise °F	120/1/60 - 480/3/60 (voltage code K) 120V MOTOR AMP DRAW = 6.5 each					208/1/60 - 480/3/60 (voltage code S) 208V MOTOR AMP DRAW = 3.5 each					240/1/60 - 480/3/60 (voltage code U) 240V MOTOR AMP DRAW = 3.5 each				
			# CKTS	AMPS PER CIRCUIT		BREAKER RATING PER CIRCUIT		# CKTS	AMPS PER CIRCUIT		BREAKER RATING PER CIRCUIT		# CKTS	AMPS PER CIRCUIT		BREAKER RATING PER CIRCUIT	
				120V/1	480V/3	120V/1	480V/3		208V/1	480V/3	208V/1	480V/3		240V/1	480V/3	240V/1	480V/3
CHD10-1036E CHD10-1042E CHD10-1048E CHD10-1060E	14 (140)	25	2	6.5	16.8	15	25	2	3.5	16.8	15	25	2	3.5	16.8	15	25
	10 (100)	18	2	6.5	12.0	15	15	2	3.5	12.0	15	15	2	3.5	12.0	15	15
	8 (080)	14	2	6.5	9.6	15	15	2	3.5	9.6	15	15	2	3.5	9.6	15	15
	6 (060)	11	2	6.5	7.2	15	15	2	3.5	7.2	15	15	2	3.5	7.2	15	15
CHD10-2060E	21 (210)	25	2	13.0	25.3	20	35	2	7.0	25.3	15	35	2	7.0	25.3	15	35
	15 (150)	18	2	13.0	18.0	20	25	2	7.0	18.0	15	25	2	7.0	18.0	15	25
	12 (120)	14	2	13.0	14.4	20	20	2	7.0	14.4	15	20	2	7.0	14.4	15	20
	9 (090)	11	2	13.0	10.8	20	15	2	7.0	10.8	15	15	2	7.0	10.8	15	15
CHD10-2072E CHD10-2084E CHD10-2096E CHD10-2108E CHD10-2120E	28 (280)	25	2	13.0	33.7	20	45	2	7.0	33.7	15	45	2	7.0	33.7	15	45
	20 (200)	18	2	13.0	24.1	20	35	2	7.0	24.1	15	35	2	7.0	24.1	15	35
	16 (160)	14	2	13.0	19.2	20	25	2	7.0	19.2	15	25	2	7.0	19.2	15	25
	12 (120)	11	2	13.0	14.4	20	20	2	7.0	14.4	15	20	2	7.0	14.4	15	20
CHD10-3096E	35 (350)	25	2	19.5	42.1	25	60	2	10.5	42.1	15	60	2	10.5	42.1	15	60
	25 (250)	18	2	19.5	30.1	25	40	2	10.5	30.1	15	40	2	10.5	30.1	15	40
	20 (200)	14	2	19.5	24.1	25	35	2	10.5	24.1	15	35	2	10.5	24.1	15	35
	15 (150)	11	2	19.5	18.0	25	25	2	10.5	18.0	15	25	2	10.5	18.0	15	25
CHD10-3108E CHD10-3120E	42 (420)	25	3	19.5	33.7/16.8	25	45/25	3	10.5	33.7/16.8	15	45/25	3	10.5	33.7/16.8	15	45/25
	30 (300)	18	2	19.5	36.1	25	50	2	10.5	36.1	15	50	2	10.5	36.1	15	50
	24 (240)	14	2	19.5	28.9	25	40	2	10.5	28.9	15	40	2	10.5	28.9	15	40
	18 (180)	11	2	19.5	21.7	25	30	2	10.5	21.7	15	30	2	10.5	21.7	15	30

Berner reserves the right to alter specifications without prior notice.

www.berner.com **Berner International** **800.245.4455**
111 Progress Ave. / New Castle / PA / 16101 / USA

EP-112
October, 2017

©Copyright, 2017 Berner International

MODEL	kW (code)	Temp Rise °F	120/1/60 - 600/3/60 (voltage code L) 120V MOTOR AMP DRAW = 6.5 each				208/1/60 - 600/3/60 (voltage code M) 208V MOTOR AMP DRAW = 3.5 each				240/1/60 - 600/3/60 (voltage code N) 240V MOTOR AMP DRAW = 3.5 each				
			# CKTS	AMPS PER CIRCUIT		BREAKER RATING PER CIRCUIT		# CKTS	AMPS PER CIRCUIT		BREAKER RATING PER CIRCUIT		# CKTS	AMPS PER CIRCUIT		BREAKER RATING PER CIRCUIT	
				120V/1	600V/3	120V/1	600V/3		208V/1	600V/3	208V/1	600V/3		240V/1	600V/3	240V/1	600V/3
CHD10-1036E CHD10-1042E CHD10-1048E CHD10-1060E	14 (140)	25	2	6.5	13.5	15	20	2	3.5	13.5	15	20	2	3.5	13.5	15	20
	10 (100)	18	2	6.5	9.6	15	15	2	3.5	9.6	15	15	2	3.5	9.6	15	15
	8 (080)	14	2	6.5	7.7	15	15	2	3.5	7.7	15	15	2	3.5	7.7	15	15
	6 (060)	11	2	6.5	5.8	15	15	2	3.5	5.8	15	15	2	3.5	5.8	15	15
CHD10-2060E	21 (210)	25	2	13.0	20.2	20	30	2	7.0	20.2	15	30	2	7.0	20.2	15	30
	15 (150)	18	2	13.0	14.4	20	20	2	7.0	14.4	15	20	2	7.0	14.4	15	20
	12 (120)	14	2	13.0	11.5	20	20	2	7.0	11.5	15	20	2	7.0	11.5	15	20
	9 (090)	11	2	13.0	8.7	20	15	2	7.0	8.7	15	15	2	7.0	8.7	15	15
CHD10-2072E CHD10-2084E CHD10-2096E CHD10-2108E CHD10-2120E	28 (280)	25	2	13.0	26.9	20	35	2	7.0	26.9	15	35	2	7.0	26.9	15	35
	20 (200)	18	2	13.0	19.2	20	25	2	7.0	19.2	15	25	2	7.0	19.2	15	25
	16 (160)	14	2	13.0	15.4	20	20	2	7.0	15.4	15	20	2	7.0	15.4	15	20
	12 (120)	11	2	13.0	11.5	20	15	2	7.0	11.5	15	15	2	7.0	11.5	15	15
CHD10-3096E	35 (350)	25	2	19.5	33.7	25	45	2	10.5	33.7	15	45	2	10.5	33.7	15	45
	25 (250)	18	2	19.5	24.1	25	35	2	10.5	24.1	15	35	2	10.5	24.1	15	35
	20 (200)	14	2	19.5	19.2	25	25	2	10.5	19.2	15	25	2	10.5	19.2	15	25
	15 (150)	11	2	19.5	14.4	25	20	2	10.5	14.4	15	20	2	10.5	14.4	15	20
CHD10-3108E CHD10-3120E	42 (420)	25	2	19.5	40.4	25	60	2	10.5	40.4	15	60	2	10.5	40.4	15	60
	30 (300)	18	2	19.5	28.9	25	40	2	10.5	28.9	15	40	2	10.5	28.9	15	40
	24 (240)	14	2	19.5	23.1	25	30	2	10.5	23.1	15	30	2	10.5	23.1	15	30
	18 (180)	11	2	19.5	17.3	25	25	2	10.5	17.3	15	25	2	10.5	17.3	15	25

Berner reserves the right to alter specifications without prior notice.

www.berner.com Berner International 800.245.4455
111 Progress Ave. / New Castle / PA / 16101 / USA

EP-112
October, 2017

©Copyright, 2017 Berner International

CHD10
ELECTRIC HEATED

TOP VIEW

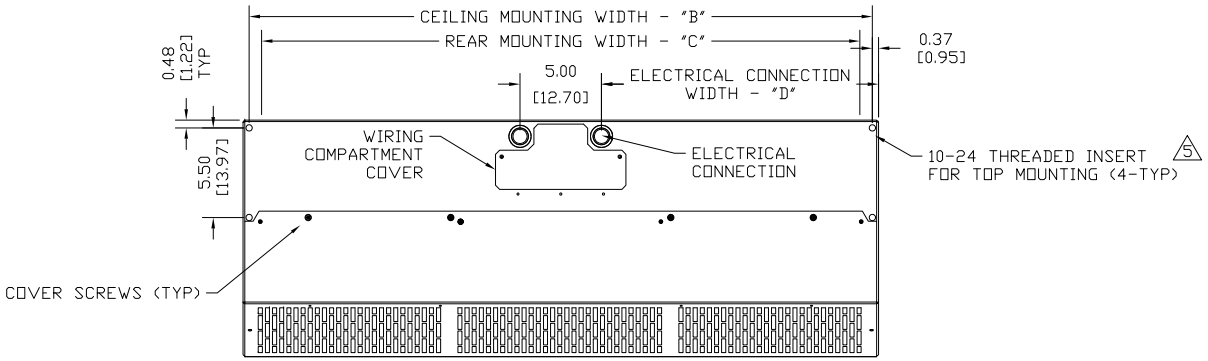

FRONT VIEW

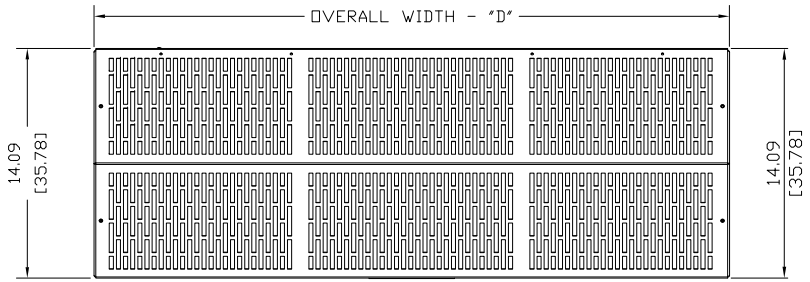

BOTTOM VIEW

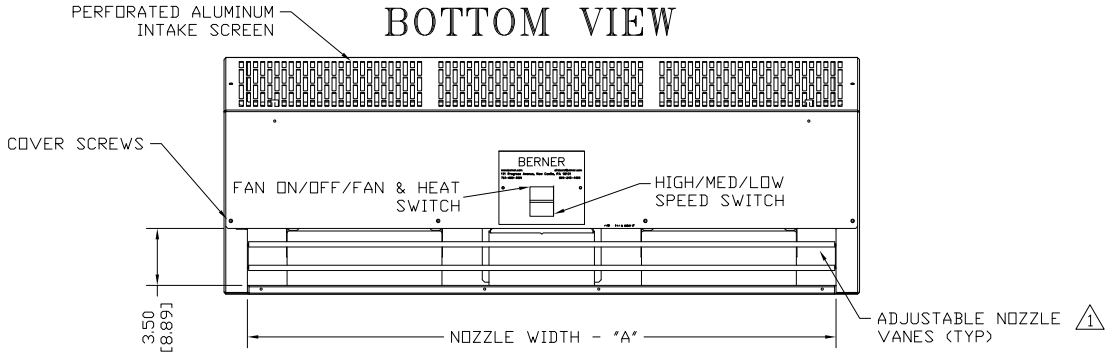

END VIEW

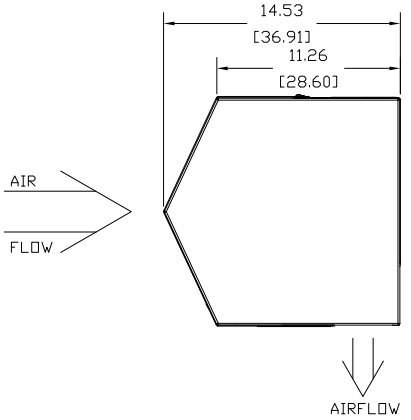

REAR VIEW

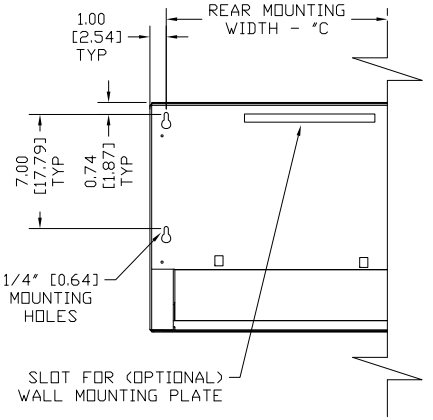

MODEL 6	NOZZLE WIDTH "A"	CEILING MOUNTING WIDTH "B"	REAR MOUNTING WIDTH "C"	UNIT WIDTH "D"	ELECTRIC WIDTH "E"
CHD10-1036E	36.00 [91.44]	38.25 [97.16]	37.00 [93.98]	39.00 [99.06]	17.00 [43.18]
CHD10-1042E	42.00 [106.68]	44.25 [112.40]	43.00 [109.22]	45.00 [114.30]	20.00 [50.80]
CHD10-1048E	48.00 [121.92]	50.25 [127.64]	49.00 [124.46]	51.00 [129.54]	23.00 [58.42]
CHD10-1060E	60.00 [152.40]	62.25 [158.12]	61.00 [154.94]	63.00 [160.02]	29.00 [73.66]
CHD10-2060E	60.00 [152.40]	62.25 [158.12]	61.00 [154.94]	63.00 [160.02]	19.00 [48.26]
CHD10-2072E	72.00 [182.88]	74.25 [188.60]	73.00 [185.42]	75.00 [190.50]	17.00 [43.18]
CHD10-2084E	86.88 [220.66]	89.13 [226.38]	87.88 [223.22]	89.88 [228.28]	20.75 [52.71]
CHD10-2096E	98.88 [251.14]	101.13 [257.18]	99.88 [253.70]	101.88 [258.76]	23.75 [60.33]
CHD10-3096E	98.88 [251.14]	101.13 [257.18]	99.88 [253.70]	101.88 [258.76]	15.50 [39.37]
CHD10-2108E	110.88 [281.62]	113.13 [287.38]	111.88 [284.18]	113.88 [289.24]	26.75 [67.95]
CHD10-3108E	110.88 [281.62]	113.13 [287.38]	111.88 [284.18]	113.88 [289.24]	17.50 [44.45]
CHD10-2120E	116.25 [295.28]	118.50 [300.99]	117.25 [297.82]	119.25 [302.90]	28.06 [71.28]
CHD10-3120E	116.25 [295.28]	118.50 [300.99]	117.25 [297.82]	119.25 [302.90]	18.38 [46.67]

NOTES:

1. AIR CURTAIN MUST BE INSTALLED SO AIR STREAM IS NOT OBSTRUCTED WHEN DEFLECTED 20° TO EITHER SIDE OF ℄.
2. ELECTRICAL CONNECTIONS TO BE FLEXIBLE.
3. FIELD VERIFY DIMENSIONS.
4. ANCHORS TO SUPPORTING STRUCTURE BY OTHERS.
5. ADEQUACY OF SUPPORTING STRUCTURE IS TO BE VERIFIED BY A PROFESSIONAL STRUCTURAL ENGINEER.
6. LETTER "E" IN MODEL NUMBER DESIGNATES ELECTRIC HEATED UNIT
7. DIMENSIONS IN INCHES [CENTIMETERS].

PROJECT			
LOCATION			
ARCHITECT			
ENGINEER		REV.	-
DWG. NO.	CHD10-ELE	TITLE: BERNER	
DATE	25SEP2017	MODEL CHD10 AIR CURTAIN	
BY	S. BEIL	ELECTRIC HEATED SYSTEM	
REPLACES	-	BERNER INTERNATIONAL CORP.	
BY	-	NEW CASTLE,PA.	