# DFDAF-330

## Multi-blade Fire Damper

## Application

Model DFDAF-330 is a multi-blade fire damper with airfoil style blades for use in walls, floors, and partitions with fire resistance rating of 3 hours or more. Model DFDAF-330 may be installed vertically (with blades running horizontal) or horizontally and is rated for airflow in either directions.

This model has a manual quadrant which allows the DFDAF-330 to function as both a fire damper and a manual balancing damper.

W & H dimensions furnished approximately ¼ in. ( 6 mm) undersize. (Add sleeve thickness for overall sleeved damper dimension)

## Ratings

**UL 555 Fire Resistance Rating**

Fire Rating: 3 hours

Dynamic Closure Rating: Actual ratings are size dependent

Velocity: Up to 4000 fpm (20.3 m/s) on sizes up to 32 in. x 36 in. (813 mm x 914 mm); 2000 fpm (10.2 m/s) on sizes greater than 32 in. x 36 in. (813 mm x 914 mm)

Pressure: Up to 8 in. wg (2 kPa)

See complete marking on product.
UL 555 Classification R13317
CAN/ULC S112 Classified Fire Damper

Model DFDAF-330 meets the requirements for fire dampers established by:

**National Fire Protection Association**
NFPA Standards 80, 90A & 101

**IBC International Building Codes**

**CSFM California State Fire Marshal**
Fire Damper Listing (#3225-0981:0103)

## Construction

| Construction | Standard | Optional |
|---|---|---|
| **Frame Material** | Galvanized steel | - |
| **Frame Material Thickness** | 16 ga. (1.5 mm) | - |
| **Frame Type** | 5 in. x 1 in. (127 mm x 25 mm) hat channel | - |
| **Blade Action** | Opposed | - |
| **Blade Material** | Galvanized steel | - |
| **Blade Material Thickness** | 14 ga. (2 mm) equivalent | - |
| **Blade Type** | Double skin airfoil | - |
| **Linkage** | Plated steel out of airstream, concealed in jamb | - |
| **Axle Bearings** | 316SS | - |
| **Axle Material** | Plated steel | - |
| **Jamb Seals** | Stainless Steel | - |
| **Closure Device** | Fusible link | - |
| **Closure Temperature** | 165°F (74°C) | 212°F (100°C), 286°F (141°C), 350°F (177°C) |
| **Actuator** | Manual quadrant | - |

## Size Limitations

| W x H | Minimum Size | Maximum Size | | |
|---|---|---|---|---|
| | | Single Section | Multi-Section 2000 fpm (10.2 m/s) | Multi-Section 4000 fpm (20.3 m/s) |
| **Inches** | 8 x 6 | 32 x 36 (V) or 30 x 48 (H or V) | 120 x 96 (V) or 144 x 96 (H) | 30 x 48 |
| **mm** | 203 x 152 | 813 x 914 or 762 x 1219 | 3048 x 2438 or 3658 x 2438 | 762 x 1219 |

## Options & Pressure Drop Data

- Extra Fusible Links
- Factory mounted accessories
  - Quick connect breakaway connections
  - Access doors
- Flanges
- Grille Tabs
- OCI (Open Closed Indication switches): Units will be supplied with one OCI per row of damper sections
- POC retaining angles
- Security bars
- Sealed transition and sleeves
- Sleeves
- Smoke Detector
- Test Switch (GTS-4)
- Transitions (C, O, R)

## Transitioned Damper Dimensions

When a fire damper is being used in conjunction with round or oval ductwork, the DFDAF-330 can be supplied in a factory sleeve with round or oval transitions on both ends of the sleeve. Dampers should be ordered to the duct dimensions. Drawings below show overall damper size.

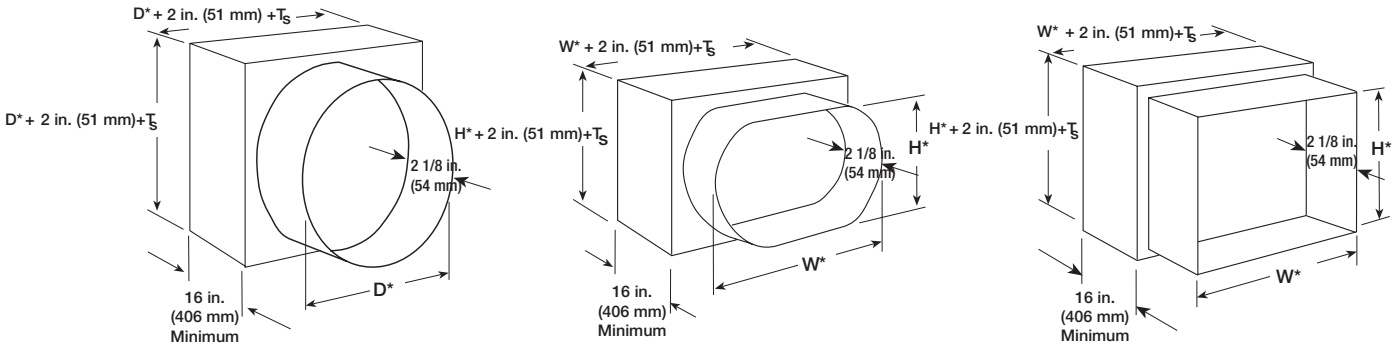


TYPE R TYPE O TYPE C

*These dimensions are furnished approximately ¼ in. (6mm) undersize, except round and oval dimensions which are approximately ⅛ in.(3 mm) undersize.

Ts = (2)(Sleeve Thickness)

# AMCA Pressure Drop

## AMCA Figure 5.2

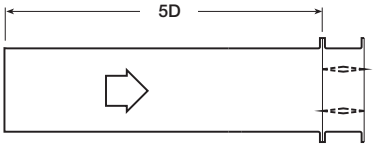


12 in. x 12 in. (305mm x 305mm)

| Velocity (fpm) | Pressure Drop (in. wg) |
|---|---|
| 500 | 0.03 |
| 1000 | 0.12 |
| 1500 | 0.26 |
| 2000 | 0.46 |
| 2500 | 0.72 |
| 3000 | 1.04 |
| 3500 | 1.41 |
| 4000 | 1.84 |

24 in. x 24 in. (610mm x 610mm)

| Velocity (fpm) | Pressure Drop (in. wg) |
|---|---|
| 500 | 0.01 |
| 1000 | 0.06 |
| 1500 | 0.12 |
| 2000 | 0.22 |
| 2500 | 0.34 |
| 3000 | 0.49 |
| 3500 | 0.67 |
| 4000 | 0.87 |

36in. x 36 in. (914mm x 914mm)

| Velocity (fpm) | Pressure Drop (in. wg) |
|---|---|
| 500 | 0.01 |
| 1000 | 0.06 |
| 1500 | 0.12 |
| 2000 | 0.22 |
| 2500 | 0.34 |
| 3000 | 0.49 |
| 3500 | 0.67 |
| 4000 | 0.88 |

12in. X 48 in. (305mm x 1219mm)

| Velocity (fpm) | Pressure Drop (in. wg) |
|---|---|
| 500 | 0.01 |
| 1000 | 0.05 |
| 1500 | 0.12 |
| 2000 | 0.21 |
| 2500 | 0.33 |
| 3000 | 0.48 |
| 3500 | 0.65 |
| 4000 | 0.88 |

48 in. x 12 in. (1219mm x 305mm)

| Velocity (fpm) | Pressure Drop (in. wg) |
|---|---|
| 500 | 0.02 |
| 1000 | 0.08 |
| 1500 | 0.18 |
| 2000 | 0.33 |
| 2500 | 0.51 |
| 3000 | 0.74 |
| 3500 | 1.00 |
| 4000 | 1.31 |

## AMCA Figure 5.3

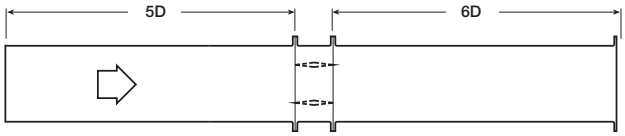


12 in. x 12 in. (305mm x 305mm)

| Velocity (fpm) | Pressure Drop (in. wg) |
|---|---|
| 500 | 0.01 |
| 1000 | 0.06 |
| 1500 | 0.13 |
| 2000 | 0.23 |
| 2500 | 0.37 |
| 3000 | 0.53 |
| 3500 | 0.73 |
| 4000 | 0.95 |

24 in. x 24 in. (610mm x 610mm)

| Velocity (fpm) | Pressure Drop (in. wg) |
|---|---|
| 500 | 0.01 |
| 1000 | 0.02 |
| 1500 | 0.06 |
| 2000 | 0.10 |
| 2500 | 0.16 |
| 3000 | 0.23 |
| 3500 | 0.32 |
| 4000 | 0.42 |

36in. x 36 in. (914mm x 914mm)

| Velocity (fpm) | Pressure Drop (in. wg) |
|---|---|
| 500 | 0.01 |
| 1000 | 0.02 |
| 1500 | 0.05 |
| 2000 | 0.09 |
| 2500 | 0.14 |
| 3000 | 0.21 |
| 3500 | 0.29 |
| 4000 | 0.38 |

12in. X 48 in. (305mm x 1219mm)

| Velocity (fpm) | Pressure Drop (in. wg) |
|---|---|
| 500 | 0.01 |
| 1000 | 0.02 |
| 1500 | 0.06 |
| 2000 | 0.10 |
| 2500 | 0.16 |
| 3000 | 0.24 |
| 3500 | 0.33 |
| 4000 | 0.43 |

48 in. x 12 in. (1219mm x 305mm)

| Velocity (fpm) | Pressure Drop (in. wg) |
|---|---|
| 500 | 0.01 |
| 1000 | 0.04 |
| 1500 | 0.10 |
| 2000 | 0.18 |
| 2500 | 0.29 |
| 3000 | 0.42 |
| 3500 | 0.57 |
| 4000 | 0.74 |

## AMCA Figure 5.5

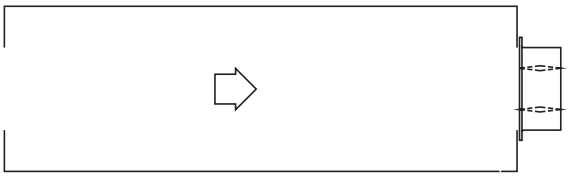

12 in. x 12 in. (305mm x 305mm)

| Velocity (fpm) | Pressure Drop (in. wg) |
|---|---|
| 500 | 0.04 |
| 1000 | 0.18 |
| 1500 | 0.42 |
| 2000 | 0.75 |
| 2500 | 1.17 |
| 3000 | 1.68 |
| 3500 | 2.29 |
| 4000 | 2.99 |

24 in. x 24 in. (610mm x 610mm)

| Velocity (fpm) | Pressure Drop (in. wg) |
|---|---|
| 500 | 0.03 |
| 1000 | 0.13 |
| 1500 | 0.29 |
| 2000 | 0.52 |
| 2500 | 0.81 |
| 3000 | 1.17 |
| 3500 | 1.60 |
| 4000 | 2.14 |

36in. x 36 in. (914mm x 914mm)

| Velocity (fpm) | Pressure Drop (in. wg) |
|---|---|
| 500 | 0.03 |
| 1000 | 0.12 |
| 1500 | 0.27 |
| 2000 | 0.48 |
| 2500 | 0.75 |
| 3000 | 1.08 |
| 3500 | 1.48 |
| 4000 | 1.93 |

12in. X 48 in. (305mm x 1219mm)

| Velocity (fpm) | Pressure Drop (in. wg) |
|---|---|
| 500 | 0.03 |
| 1000 | 0.12 |
| 1500 | 0.27 |
| 2000 | 0.49 |
| 2500 | 0.77 |
| 3000 | 1.11 |
| 3500 | 1.51 |
| 4000 | 1.97 |

48 in. x 12 in. (1219mm x 305mm)

| Velocity (fpm) | Pressure Drop (in. wg) |
|---|---|
| 500 | 0.03 |
| 1000 | 0.14 |
| 1500 | 0.32 |
| 2000 | 0.57 |
| 2500 | 0.89 |
| 3000 | 1.28 |
| 3500 | 1.75 |
| 4000 | 2.29 |

Greenheck Fan Corporation certifies that the model DFDAF-330 shown herein is licensed to bear the AMCA Seal. The ratings shown are based on tests and procedures performed in accordance with AMCA Publication 511 and comply with the requirements of the AMCA Certified Ratings Programs. The AMCA Certified Ratings Seal applies to air performance ratings only.

## Sleeve and Sideplate Dimensions

The drawings below and corresponding table show the position of the DFDAF-330 damper when mounted in a factory sleeve ("A" dimension). The standard mounting locations provide enough space for the mounting of manual quadrant(s) and allow space for installation of retaining angles and duct connections. The following options may affect the range of available mounting locations: transitions, security bars, grille tabs.

The standard location of a damper mounted in a factory sleeve (“A” dimension) is shown below. The damper can be positioned at other locations within a range of 7 3⁄16 in. (183 mm) to 16 in. (406 mm) for the “A” dimension.

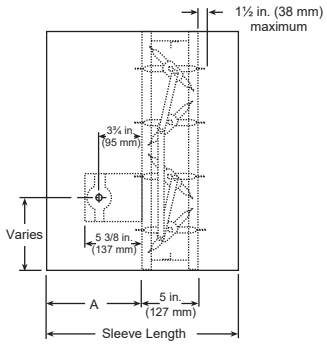


Sleeve

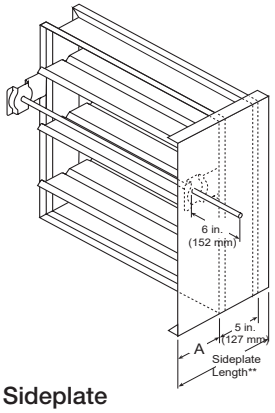


Sideplate

| in. (mm) | With Sleeve | | Sideplate |
|---|---|---|---|
| | Minimum Damper Location “A” | Maximum Damper Location “A” | Damper Location “A” |
| Dampers with no OCI | 7 3⁄16 in. (183) | 16 (406) | 6 3⁄16 (157) |
| Height < 12 in. (305) OCI | 12 (305) | 16 (406) | 12 (305) |
| Height ≥ 12 in. (305) OCI | 7 3⁄16 in. (183) | 16 (406) | 12 (305) |

**NOTE:** Entire damper frame is not required to be installed within the wall. The damper blades, when closed should be contained within the wall.

## Multiple Section Dampers

Dampers larger than maximum single section size are supplied as a factory assembly of two or more sections of equal size. The following figures show maximum damper section size and assembly configurations for multi-section dampers. Larger damper sizes may ship in multiple sections.

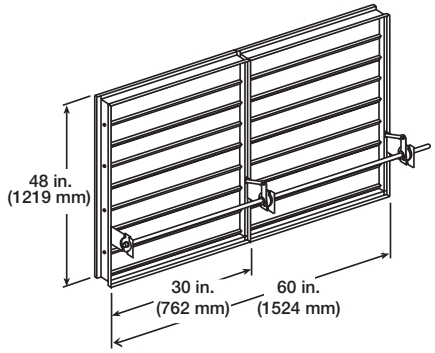


**Two Section**

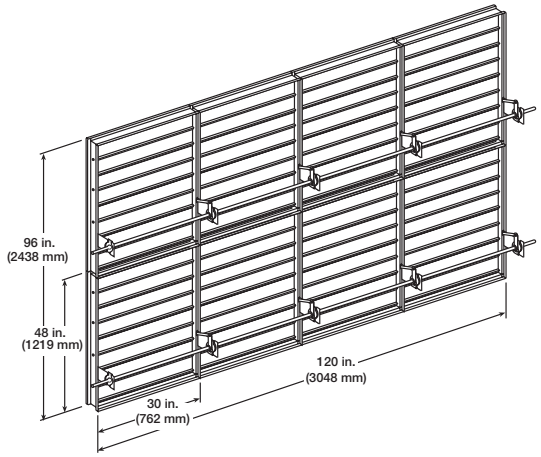


**4 sections wide**
**2 sections high**



NOTE: Entire damper frame is not required to be installed within the wall. The damper blades, when closed should be contained within the wall.

# Document Links

INSTALLATION

CATALOG

SPECIFICATIONS

SELECTION GUIDE

WARRANTY

GREENHECK
P.O. Box 410 • Schofield, WI 54476-0410 • 715.359.6171 • greenheck.com

Copyright ® 2026 Greenheck Fan Corporation
DFDAF-330, R16, March 2026
Greenheck Fan Corporation reserves the right to make product changes without notice