TCF
Twin City Fan

INDUSTRIAL PROCESS AND
COMMERCIAL VENTILATION SYSTEMS

DOWNBLAST ROOF EXHAUSTERS

DCRD | BCRD | BCRD-E (Endurex™ Polymeric Housing)

Overview

DCRD | BCRD | BCRD-E

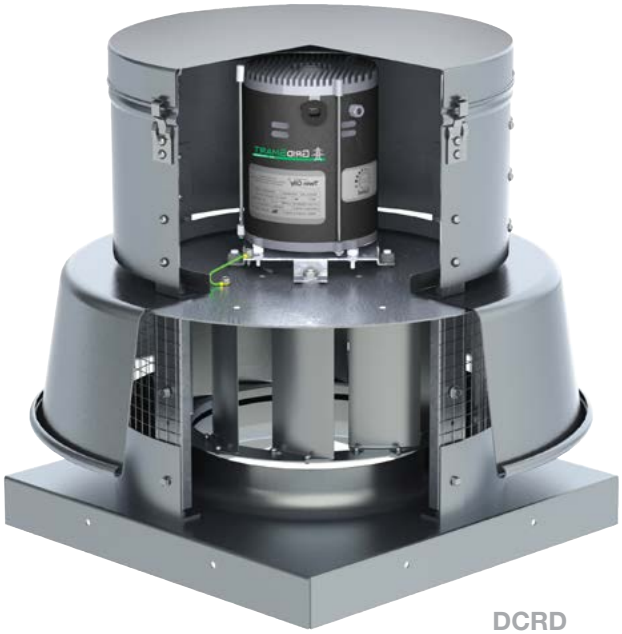

DCRD
Direct Drive

Now Available with

GRIDSMART™
EC MOTORS

see page 9

Twin City Fan & Blower's line of quiet, efficient and economical centrifugal roof exhausters are designed to offer world-class performance and quality in a wide variety of commercial and industrial ventilating applications.

Models DCRD (direct drive) and BCRD (belt driven) feature spun aluminum construction. Model BCRD-E belt driven roof exhausters feature a housing constructed of Twin City Fan & Blower's proprietary Endurex™ polymeric material that provide significantly improved impact, weather, corrosion, and UV resistance – see page 5 for more information.

Typical Applications Include
Agriculture, Air Pollution Control, Automotive, Boilers, Brick, Car Wash, Commercial Plan & Spec, Composting, Ethanol, Food & Beverage, Foundry, General Manufacturing, Glass, HVAC, Institutional & Hospitality, Metal & Minerals, Microchip, OEM, Pharmaceutical, Power Generation, Recycling, Textile, Transportation

Wheel Types
Backward Inclined Centrifugal

Optional Construction
Special Coatings, Spark Resistant, UL 705, UL 762, UL Smoke & Heat

Certifications
AMCA Sound/Air and FEG, UL 705 Listed for Electrical, UL 762 Listed for Grease-Laden Air, UL Listed for Smoke Control Systems, OSHPD Seismic Preapproval per OSP-0395-10, Miami-Dade County Hurricane Rating per NOA No. 12-0914.12

c UL us

DCRD, BCRD and BCRD-E models are cULus 705 listed for electrical, File No. E158680.

Twin City Fan & Blower certifies that the Models DCRD, BCRD, and BCRD-E shown herein are licensed to bear the AMCA Seal. The ratings shown are based on tests and procedures performed in accordance with AMCA Publication 211 and AMCA Publication 311 and comply with the requirements of the AMCA Certified Ratings Program.

Fan Efficiency Grade (FEG) certification applies to Model BCRD Sizes 140D, 160D, 160DHP, 180D, 180DHP, 210D, 210DHP, 240D, 240DHP, 300D, 300DHP, 360D, 360DHP, 420D and 480D, Model BCRD-E Sizes 140D, 160D, 160DHP, 180D, 180DHP, 210D, 210DHP, 240D and 240DHP.

TCF
TWIN CITY FAN

For complete product performance, drawings and available accessories, download our Fan Selector program at tcf.com.

Overview

DCRD | BCRD | BCRD-E

The centrifugal roof exhausters are designed for roof mounted exhaust of relatively clean air. Typical applications include general HVAC, warehouse exhaust, and exhaust for churches, schools and offices.

Model DCRD

8" to 19.25" wheel diameters
Airflow to 5,600 CFM
Static pressure to 1" w.g.

Model BCRD

8.5" to 49.21" wheel diameters
Airflow to 28,700 CFM
Static pressure to 3.25" w.g.

Model BCRD-E

8.5" to 27.95" wheel diameters
Airflow to 8,700 CFM
Static pressure to 3.25" w.g.

DCRD/BCRD
Spun Aluminum Housing

BCRD-E Belt Driven
Endurex™ Housing

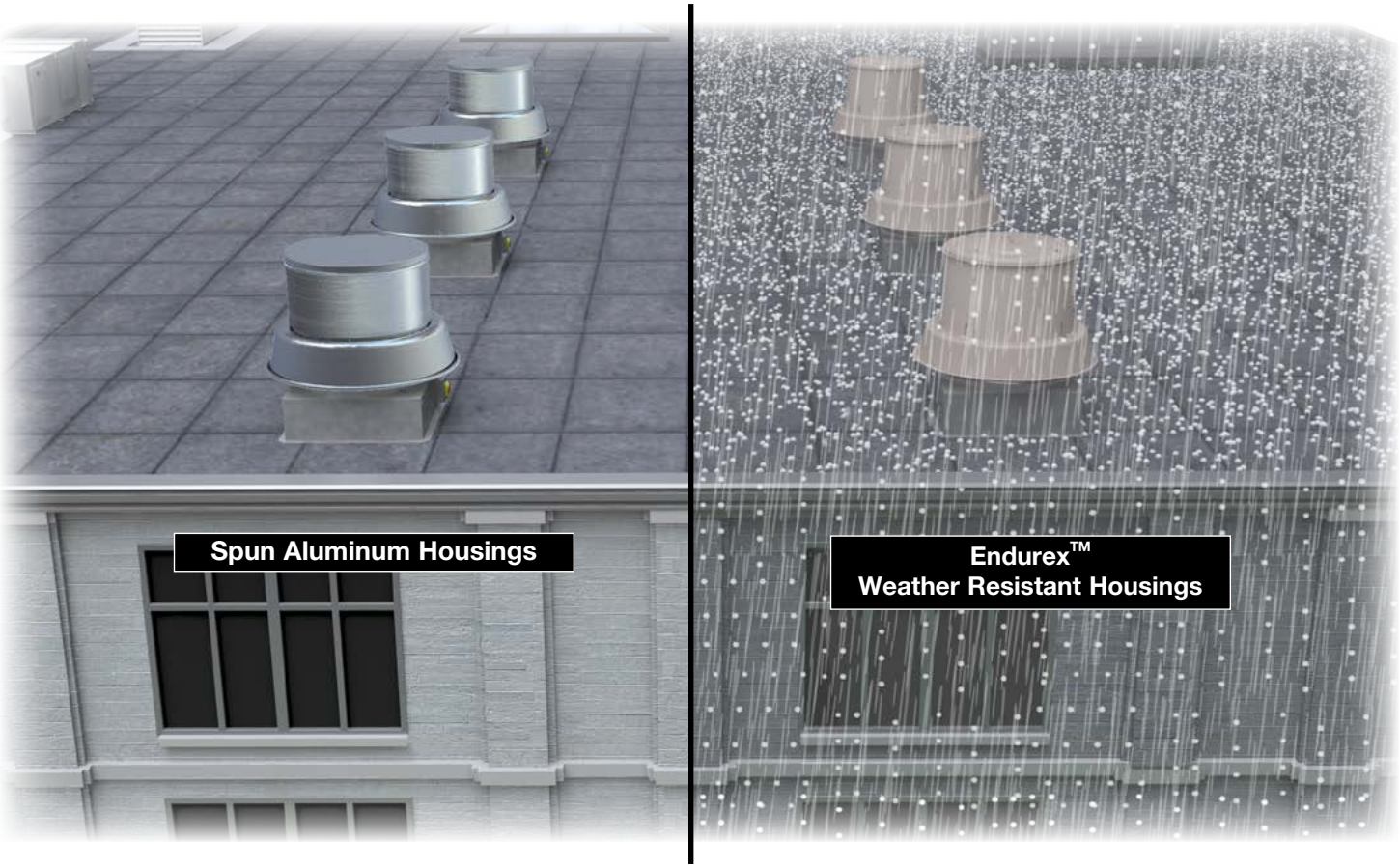

Models

DCRD | BCRD | BCRD-E

Housings - BCRD and DCRD housings feature heavy-gauge spun aluminum construction of the shroud and top cover. Shrouds feature a rolled bead edge for rigidity. Motor bands are constructed of heavy gauge aluminum, rolled and beaded for rigidity. All housings provide complete protection of the motor and drive assembly, while allowing quick access to these components.

Bearings - Heavy-duty re-greaseable pillow block ball bearings are specifically designed for air handling applications to provide an average life (L-50) of 500,000 hours or more at maximum cataloged operating speeds.

Shaft - Precision ground and polished with a first critical speed of at least 125% of the fan's maximum operating speed.

Drive - Adjustable pitch V-belt drives with cast iron sheaves and heat resistant belts are selected at 150% of the driven motor horsepower.

Motors - ODP, TEFC and explosion proof, single and three phase motors are carefully matched to the fan load.

Vibration Isolation - Motor and drive assembly is completely isolated from the fan supports by rubber isolators to reduce transmission of noise and vibration.

Wheel - Quiet and efficient non-overloading wheels with backwardly curved blades are precisely matched to a deep spun venturi. All wheels are statically and dynamically balanced to ensure smooth and quiet operation.

Galvanized Bird Screen - Protects the wheel, inlet and internal components from entry of birds.

Curb Cap - One-piece curb cap/inlet venturi assembly provides protection from weather. Prepunched mounting holes provide easy and accurate attachment to the roof curb.

Conduit Tubing - A conduit tube is furnished for running electrical wiring through the curb cap and into the motor compartment.

Disconnect Switch - Standard on all units. Fans are provided with a NEMA 1 type disconnect switch mounted in the motor compartment when ODP or TEFC motors are used. When explosion proof motors are specified, a NEMA 7/9 disconnect switch will be shipped loose for field mounting and wiring.

Model

BCRD-E

Endurex™ Construction Advantages

BCRD-E housings feature Endurex™ polymeric construction of the housing and top cover. The polymeric construction of Endurex™ provides the same long lasting characteristics as aluminum but with significantly improved impact, weather, corrosion, and UV resistance. To prove our confidence in Endurex™ we are providing a limited lifetime warranty on all Endurex™ housing components.

Impact Resistant - Housing will not dent or crack even in cold weather to -40ºF.

Weather Resistant - Resistant to storm damage caused by wind, hail and airborne objects.

Corrosion Resistant - Impervious to salt, airborne chemicals and normal weathering.

UV Resistant - UV inhibitors provide resistance to ultraviolet light for long years of service.

Resists Shipping Damage - Impossible to dent and alter housing shape caused by improper handling.

Safe Installation - Provides safe areas to grab for installation and maintenance without sharp metal edges.

Ease of Maintenance - Removable top cover provides for belt inspection and maintenance, while the one-piece construction provides easy removal and access to the wheel.

Twin City Fan & Blower's proprietary Endurex™ polymeric material

UL TESTING, ENDUREX™ HOUSINGS

The Endurex™ housing was tested by UL in accordance with UL 94, 746A, and 746C and is approved as UL 705 listed. The Endurex™ material underwent rigid testing per these standards, surpassing the requirements of the following:

Ultraviolet Light Exposure Testing – Samples were exposed to ultra violet light for an equivalent of 500,000 hours (90+ years) to provide the assurance that the material will last a lifetime.

Flammability Testing – Flame tests performed per UL 94, the most widely accepted flammability performance standards for plastic materials, gauged the material's ability to propagate or extinguish a flame once ignited.

Impact Resistance Testing – Tensile and izod impact tests measured the material's resistance to real life conditions such as falling objects, blows, collisions, drops, etc.

Functional Support Testing – Flexural and tensile strength tests to prove the material's structural stability and integrity.

TCF
TWIN CITY FAN

OPTIONS/ACCESSORIES

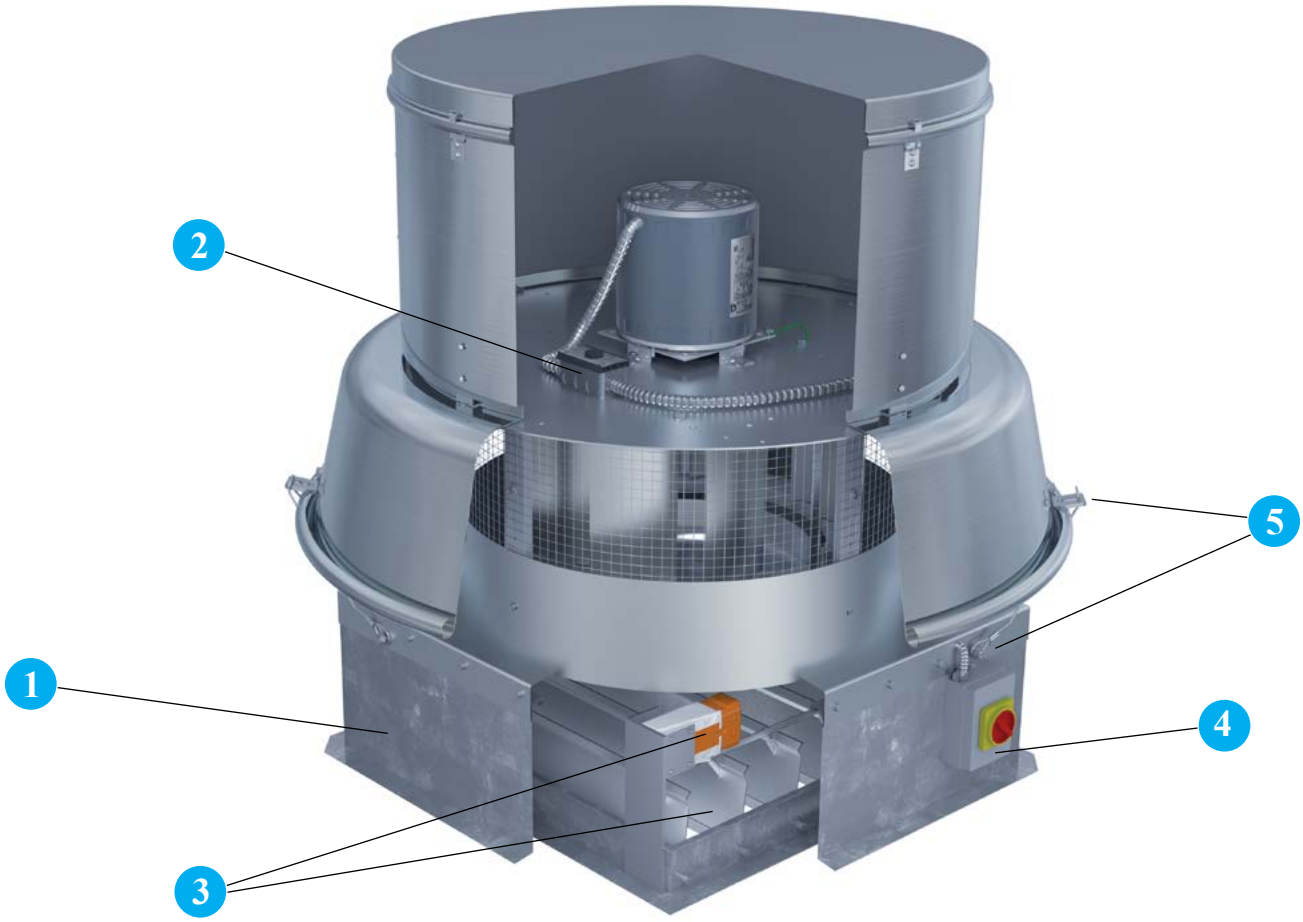

1 **Self-Flashing Roof Curb** Prefabricated roof curbs are available in heavy duty galvanized steel or aluminum construction, in heights of 8", 12" or 18". The self-flashing curb is provided with a factory installed 3/16" polystyrene gasket. Curbs are provided with 1.5" of insulation as standard and feature continuously welded seams for added rigidity and moisture protection. Prefabricated curbs are also available in raised cant, pitched and peak models. Refer to Catalog 4910 for complete details on roof curb options. Minimum 12" high curbs are recommended for use with motorized dampers.

2 **Variable Speed Control** is an optional accessory on all DCRD models with 115 volt, open type motors, to allow the adjustment of airflow for system balancing. Variable speed controllers are solid-state (Tri-ac) design, and are designed to start the motor on high speed for better startup characteristics. Variable speed controls can be shipped separately, factory installed, or field installed on the unit at a later date. Motor must be ODP 115V, PSC or shaded pole type.

3 **Backdraft Damper,** with automatic or motorized operation, feature a felt seal on the edge of the damper blades for quiet operation. Damper frames are constructed of 19-gauge galvanized steel and blades are constructed of 26-gauge aluminum.

Motorized dampers are recommended for low CFM applications to assure unrestricted airflow. Motorized dampers are available with 115, 208, 230, 460, 575 or 24 volt service. End switches are available. When a motorized damper option is selected a 12" (or greater) high roof curb is required.

4 **NEMA 4 Disconnect Switch** provides positive electrical shutoff when fan cleaning or maintenance of fan and is water and dust tight. Switch is available shipped loose for field mounting and wiring or factory mounted and wired. NEMA 3R enclosure is also available.

5 **Tie-Down Brackets** A quantity of four brackets are mounted to the fan shroud to allow the fan to be secured to the roof in areas where high winds are a concern. Guy wires are supplied and installed by others.

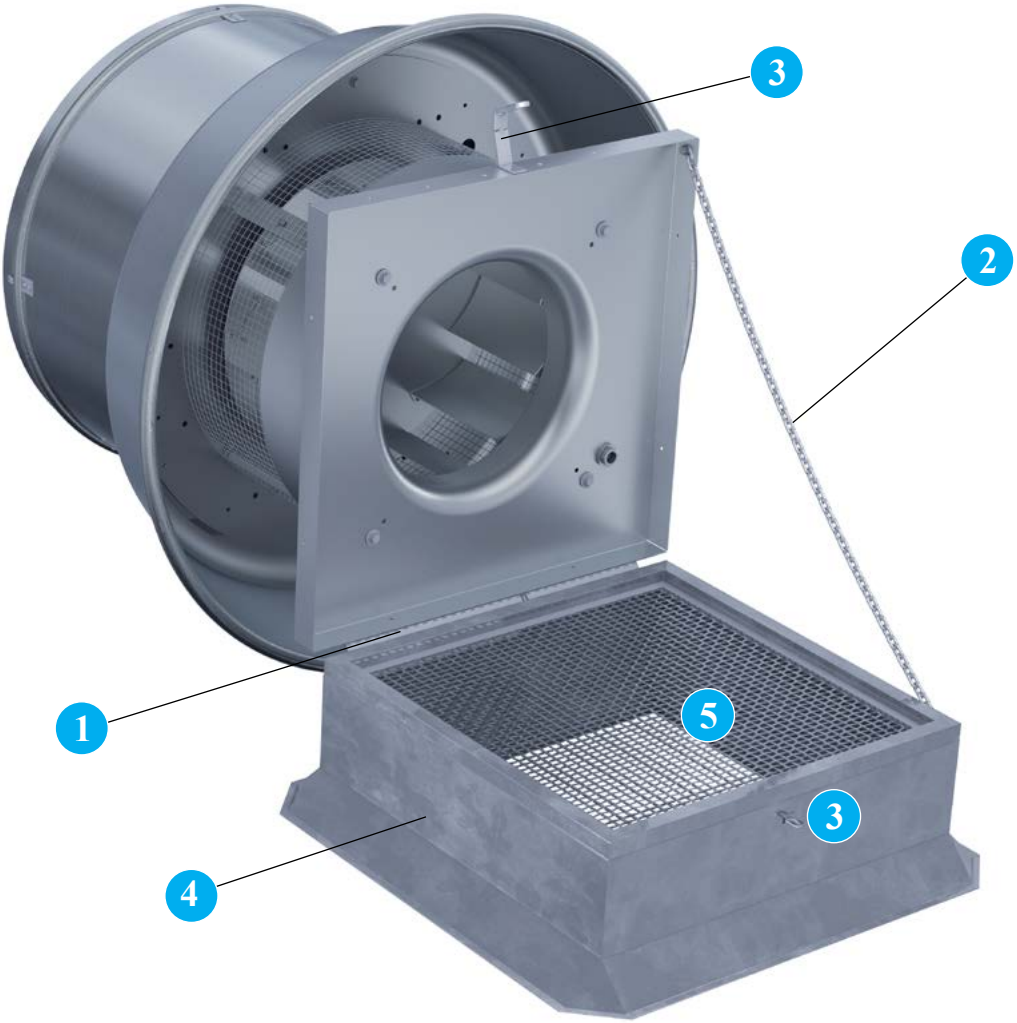

1 **Curb Hinge** The curb hinge arrangement provides easy access to the exhaust fan, backdraft damper and duct for servicing and cleaning. The curb hinge is of the piano type, running the entire length of the fan's curb base. The curb hinge option ships loose and is designed for use with a standard canted curb only (1.5" less than fan base). This option cannot be used with self-flashing curbs.

2 **Retaining Chain** is available in conjunction with the curb hinge arrangement to stabilize the unit and to prevent damage from occurring to the unit while servicing and cleaning.

3 **Security Hasp** A security hasp is available in conjunction with the curb hinge arrangement to prevent removal of the unit from the unit curb cap and prevent entrance into the building through the roof's ductwork.

4 **Canted Roof Curb** Prefabricated roof curbs are available in heavy duty galvanized steel or aluminum construction, in heights of 8", 12" or 18". The canted curb is provided with a factory installed wood nailer. Curbs are provided with 1.5" of insulation as standard and feature continuously welded seams for added rigidity and moisture protection. Prefabricated curbs are also available in raised cant, pitched and peak models. Refer to Catalog 4910 for complete details on roof curb options. Minimum 12" high curbs are recommended for use with motorized dampers.

5 **Insect Screen** Provides protection from entry of insects into wheel, inlet and interior of building.

OPTIONS/ACCESSORIES

1 **Auto Belt Tensioner** Spring loaded pulley used for automatic belt tensioning. Eliminates the need for regular belt tensioning and extends belt life.

2 **Miami-Dade Construction** All sizes on model DCRD and sizes 070-360 on model BCRD are available with optional Miami-Dade Hurricane Construction. With this option, units are rated for wind loads up to 150 miles per hour. In conjunction with independent, licensed Florida Professional Engineers, these fans have undergone rigorous design, analysis and testing to ensure they meet the stringent product requirements of Miami-Dade County. Twin City Fan & Blower's NOA (Notice of Acceptance) number is 11-0126.08 and can be found on the Miami-Dade County website.

TCF
TWIN CITY FAN

OTHER OPTIONS/ACCESSORIES INCLUDE:

Special Coatings Powered roof exhausters often require special coatings for protective and decorative purposes. Available coatings include air-dried enamel, air-dried epoxy, and Heresite (air-dried phenolic). Contact your Twin City Fan & Blower sales representative for more information on available coatings and colors.

Straight-Sided Roof Curb Prefabricated roof curbs are available in heavy-duty galvanized steel or aluminum construction, in heights of 8", 12" or 18". The straight-sided style curb is provided with a factory installed damper tray and wood nailer, manufactured with the outside dimensions of a canted curb (1.5" less than fan curb cap inside dimension). Curbs are provided with 1.5" of insulation as standard and feature continuously-welded seams for added rigidity and moisture protection. Prefabricated curbs are also available in canted, self-flashing, pitched and peak models. Refer to Catalog 4910 for complete details on roof curb options. Minimum 12" high curbs are recommended for use with motorized dampers.

2-Speed Switch Two speed switch is available for 2 speed/2 winding motors to control the fan speed (high speed, low speed, off). Available on single phase, 1 HP and below.

Firestat Designed to shut down fan in the event of a fire to prevent spreading. For use with single phase motors only. Available shipped loose for field mounting and wiring or factory mounted and wired.

AMCA Spark B Includes a non-ferrous (aluminum) wheel and an aluminum rubbing plate around the opening through which the shaft passes.

Performance Baffle Inlet plate with customized diameter to meet specific performance point. Ships loose for field mounting.

Twin City Fan & Blower offers its own line of custom engineered Electronically Commutated (EC) motors. Electronic commutation is the latest motor technology to be used in direct drive fans. Also known in the industry as Brush Free or Brushless DC, the EC motors utilize an electronic circuit board to control the functionality of the motor. The motor operates off of single phase AC power, which is converted to DC power within the motor's circuitry. Twin City Fan & Blower has motor options available for 115V, 208-230V or 277V single phase electrical power. The result is a highly efficient motor, even at part load, with an expanded speed control range and a variety of speed control options from which to choose. EC motors are available in ODP, TENV and TEFC enclosures.

GRIDSMART™ EC MOTORS

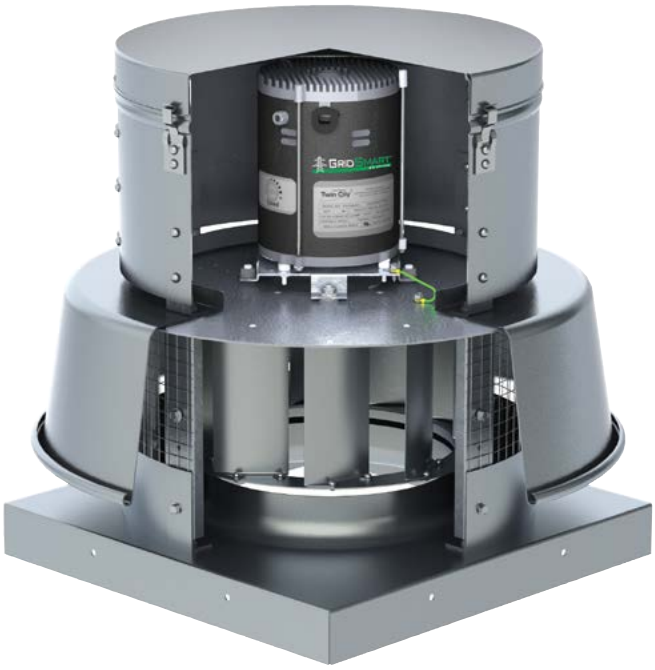

Model DCRD
With GridSmart™ EC Motor

Benefits

- Efficiencies up to 85%
- Constant efficiency as the motor speed is varied
- Up to 66% energy savings over traditional PSC motors
- Performance range comparable to a belt drive fan with reduced maintenance benefits of a direct drive fan
- 80% usable turndown range as compared with 40% maximum on PSC motors
- Soft start gives fans smooth, quiet start
- Lower operating temperatures result in longer life and reduces energy consumption
- Heavy-duty ball bearings are permanently lubricated
- Elimination of VFD results in lower initial cost

TCF
TWIN CITY FAN

EC Motor Options

1/6HP to 1HP

- 1/6HP: 115V, single phase
- 1/4HP – 1HP: 115V, 208-230V, 277V, single phase
- ODP or TENV Enclosure
- Motor mounted speed control dial as standard
- 0-10VDC control leads as standard
- Available with remote mounted speed control dial

1HP & 2HP

- 1HP: 115V, 208-230V, single phase
- 2HP: 208-230V, single phase
- TEFC enclosure (totally enclosed fan cooled)
- Available with motor mounted speed dial or 0-10VDC control lead

1HP & 2HP
GridSmart™ EC Motors

1/6HP to 1HP
GridSmart™ EC Motors

Overview

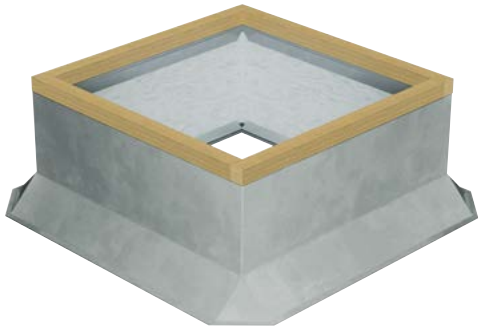

Canted Roof Curbs

- Constructed of 18-gauge galvanized steel with continuous welded seams
- Large 3" built-in 45° cant to accommodate roofing material to top of curb. Cant is beveled at corners for better support of roofing material
- Wood nailer (1½") secured to top ledge
- Lined with 1½" fiberglass fire-resistant, sound-absorbing insulation
- Damper shelf standard
- Options: Aluminum (16-gauge) construction, burglar security bars, metal liner (galvanized or aluminum), special heights up to 24", single or double pitched curbs for sloping roofs

Self-Flashing & Straight-Sided Roof Curbs

- Constructed of 18-gauge galvanized steel with continuous welded seams
- Wide base plate (flashing) to insure watertight seal to roof
- Top ledge covered with 3⁄16" polystyrene gasket (self-flashing) for weather seal and to reduce metal-to-metal conducted noise
- Wood nailer secured to top ledge (straight-sided)
- Lined with 1½" fiberglass fire-resistant, sound-absorbing insulation
- Damper shelf standard
- Straight-sided roof curbs are constructed with the same features as the self-flashing curbs, but are one dimensional to allow for field supplied cants and roofing material to be brought up to the top of the curb
- Options: Aluminum (16-gauge) construction, burglar security bars, metal liner (galvanized or aluminum), special heights up to 24", single or double pitched curbs for sloping roofs

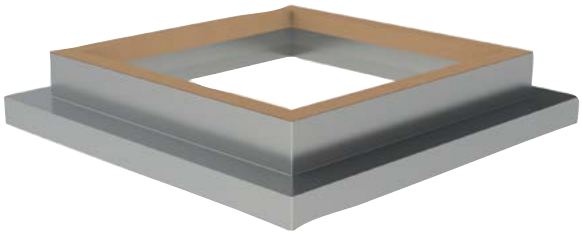

Curb Adapters

- Constructed of heavy-gauge galvanized steel with continuous welded seams
- Top ledge covered with 3⁄16" polystyrene gasket to reduce metal-to-metal conducted noise and act as a weather seal
- Available in enlarger or reducer (shown) models

Overview

Disconnect switches provide positive electrical shutoff during fan cleaning or maintenance.

NEMA 1 Disconnect Switch (Standard)

A NEMA 1 disconnect switch is available shipped loose for field mounting and wiring or factory mounted and wired with ODP or TEFC motors.

NEMA 1 Disconnect Switch

NEMA 3R Disconnect Switch

A NEMA 3R, rain proof, disconnect is available shipped loose for field mounting and wiring or factory mounted and wired externally.

NEMA 3R Disconnect Switch

NEMA 4 Disconnect Switch

A NEMA 4, water and dust tight, disconnect is available shipped loose for field mounting and wiring or factory mounted and wired externally.

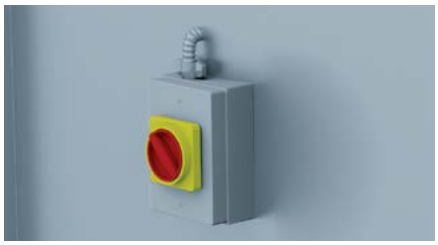

NEMA 4 Disconnect Switch

NEMA 7/9 Disconnect Switch

A NEMA 7/9 disconnect switch is recommended on fans with explosion proof motors. The NEMA 7/9 switch is designed for use with fans operating in hazardous environments. Available shipped loose for field mounting and wiring. (Not shown.)

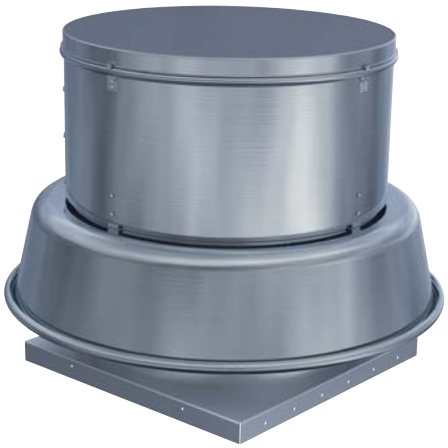

TCF
TWIN CITY FAN

060B – 085B DCRD

EC MOTOR		PSC MOTOR			STATIC PRESSURE (INCHES W.G.)																			
SIZE	MTR HP	SIZE	MTR HP	RPM	0		0.100		0.125		0.250		0.375		0.500		0.625		0.750		0.875		1.000	
					CFM		CFM		CFM		CFM		CFM		CFM		CFM		CFM		CFM		CFM	
					BHP	Sone	BHP	Sone	BHP	Sone	BHP	Sone	BHP	Sone	BHP	Sone	BHP	Sone	BHP	Sone	BHP	Sone	BHP	Sone
060BE	1/6	060B	1/8	950	151		101		84															
					0.00	2.5	0.01	2.5	0.01	2.4														
				1150	183		145		133															
					0.01	3.5	0.01	3.2	0.01	3.4														
				1350	215		183		174		121													
					0.01	4.6	0.01	4.3	0.01	4.2	0.01	4.4												
				1425	227		197		189		141													
					0.02	5.1	0.02	5.1	0.02	4.8	0.02	5.0												
				1500	238		211		203		159		91											
					0.02	5.9	0.02	5.9	0.02	5.6	0.02	5.7	0.02	5.9										
				1575	250		224		217		176		124											
					0.02	5.9	0.02	6.6	0.02	6.7	0.02	6.2	0.02	5.9										
				1650	262		238		231		193		147											
					0.02	7.9	0.02	7.9	0.02	7.9	0.03	6.8	0.02	6.6										
		---	---	1750	278		255		249		214		173		114									
					0.03	8.7	0.03	8.7	0.03	8.7	0.03	7.5	0.03	7.9	0.03	7.4								
070BE	1/6	070B	1/8	950	238		149		123															
					0.01	3.2	0.01	2.9	0.01	2.9														
				1150	288		219		199															
					0.01	4.5	0.01	4.0	0.01	4.3														
				1350	338		281		266		176													
					0.01	5.6	0.02	5.2	0.02	5.1	0.02	5.2												
				1425	356		303		289		207													
					0.02	6.1	0.03	5.6	0.02	5.4	0.02	5.2												
				1500	375		324		312		235													
					0.02	6.5	0.02	6.4	0.02	6.2	0.02	6.1												
				1575	394		346		333		263		177											
					0.02	7.2	0.02	7.4	0.02	7.0	0.02	6.9	0.02	6.5										
				1650	412		367		355		289		214											
					0.02	8.5	0.03	8.5	0.03	8.0	0.03	7.7	0.03	7.1										
		---	---	1750	438		394		383		324		255											
					0.03	9.6	0.03	9.6	0.03	9.5	0.03	8.5	0.03	7.6										
080BE	1/6	080B	1/8	950	294		176		137															
					0.00	3.0	0.01	2.5	0.01	2.7														
				1150	356		262		236															
					0.01	4.4	0.01	3.9	0.01	4.1														
				1350	418		340		319		198													
					0.01	5.8	0.02	5.2	0.02	5.1	0.01	5.2												
				1425	442		367		348		240													
					0.01	6.4	0.02	5.8	0.02	5.6	0.02	5.6												
				1500	465		395		376		277													
					0.02	6.9	0.02	6.4	0.02	6.2	0.02	6.0												
				1575	488		422		404		312													
					0.02	7.4	0.02	7.2	0.02	6.7	0.02	6.9												
				1650	512		448		432		345		240											
					0.02	7.9	0.03	7.9	0.03	7.5	0.03	7.7	0.03	7.3										
		---	---	1750	542		483		468		387		296											
					0.03	8.9	0.03	8.9	0.03	8.4	0.03	8.4	0.03	7.9										
085BE	1/6	085B	1/8	950	401		331		311		185													
					0.02	4.0	0.02	3.4	0.02	3.4	0.02	3.4												
				1150	485		430		414		328		214											
					0.04	5.8	0.04	5.7	0.04	5.2	0.04	5.3	0.04	5.0										
				1350	570		524		512		443		364		268									
					0.06	7.7	0.06	7.7	0.06	7.7	0.06	6.6	0.06	7.0	0.06	6.7								
				1425	601		558		547		483		412		328		202							
					0.07	8.4	0.07	8.4	0.07	8.4	0.07	7.3	0.07	7.8	0.07	7.3	0.06	7.1						
				1500	633		592		581		522		457		381		291							
					0.08	8.9	0.08	8.9	0.08	8.9	0.08	7.9	0.09	8.4	0.08	7.6	0.08	7.9						
				1575	665		626		616		560		499		431		353		244					
					0.09	9.6	0.09	9.6	0.10	9.6	0.10	8.6	0.10	8.5	0.10	8.9	0.10	8.4	0.08	8.4				
				1650	696		660		650		596		540		479		407		325					
					0.10	10.2	0.11	10.2	0.11	10.2	0.11	9.6	0.11	9.1	0.11	9.6	0.10	9.0	0.11	9.1				
		---	---	1750	738		704		695		647		594		538		475		405		321			
					0.12	11.1	0.13	11.1	0.13	11.1	0.13	10.8	0.13	10.1	0.14	10.4	0.13	10.4	0.13	10.1	0.12	10.2		

EC Motor is an Electronically Commutated Motor.
PSC Motor is a Permanent Split Capacitor Motor.

NOTES:

1. The AMCA Seal for sound ratings does not apply to units with speed control.
2. Performance certified is for installation Type A: Free inlet, Free outlet.
3. Performance ratings do not include the effects of appurtenances (accessories).
4. Sound ratings shown are loudness values in fan sones at 5 ft. (1.5 m) in a hemispherical free field calculated per AMCA Standard 301-90. Type A: Free inlet fan hemispherical sone levels.
5. Highlighted speeds indicate nominal speeds without speed control on PSC motors. All other speeds are intermediate speeds set with the solid-state speed controller.
6. 1/8 HP motor is 3-speed (1650 RPM/1500 RPM/1350 RPM).
7. Speed control on PSC motors is available for ODP 115/60/1 only. PSC motors are wired at either the 1650 or the 1500 RPM taps.

090B – 120B DCRD

EC MOTOR		PSC MOTOR			STATIC PRESSURE (INCHES W.G.)																			
SIZE	MTR HP	SIZE	MTR HP	RPM	0		0.100		0.125		0.250		0.375		0.500		0.625		0.750		0.875		1.000	
					CFM		CFM		CFM		CFM		CFM		CFM		CFM		CFM		CFM		CFM	
					BHP	Sone	BHP	Sone	BHP	Sone	BHP	Sone	BHP	Sone	BHP	Sone	BHP	Sone	BHP	Sone	BHP	Sone	BHP	Sone
090BE	1/6	090B	1/8	950	519		430		403		235													
					0.02	4.0	0.02	3.5	0.02	3.5	0.02	3.5												
				1150	628		558		538		422		273											
					0.04	5.7	0.04	5.6	0.04	5.3	0.04	5.3	0.04	5.0										
				1350	737		679		663		574		467		340									
					0.06	7.6	0.06	7.6	0.06	7.6	0.07	6.8	0.07	6.8	0.07	6.8								
				1425	778		723		709		627		530		417		253							
					0.07	8.3	0.07	8.3	0.08	8.3	0.08	7.4	0.08	7.7	0.08	7.3	0.07	7.2						
				1500	819		767		754		678		589		488		370							
					0.08	8.9	0.09	8.9	0.09	8.9	0.09	8.1	0.10	8.4	0.09	7.7	0.09	8.0						
				1575	860		811		798		728		646		553		448		310					
					0.09	9.6	0.10	9.6	0.10	9.6	0.11	8.7	0.11	8.7	0.11	8.8	0.11	8.6	0.10	8.6				
				1650	901		854		842		776		701		616		521		413					
					0.11	10.4	0.11	10.4	0.11	10.4	0.12	9.8	0.13	9.3	0.13	9.8	0.12	9.2	0.12	9.5				
		---	---	1750	956		912		900		840		771		694		609		516		409			
					0.13	11.5	0.13	11.5	0.13	11.5	0.14	11.0	0.15	10.2	0.15	10.8	0.15	10.5	0.15	10.2	0.14	10.3		
095BE	1/4	095B	1/8	950	700		574		538		283													
					0.03	4.6	0.03	4.0	0.03	4.1	0.03	3.6												
				1150	848		747		719		564		323											
					0.04	6.6	0.05	6.3	0.05	6.0	0.05	6.0	0.04	5.3										
				1350	995		911		889		767		623		411									
					0.07	8.7	0.08	8.7	0.08	8.3	0.08	7.8	0.08	7.5	0.07	7.1								
				1425	1050		972		951		837		709		534		304							
					0.08	9.5	0.09	9.5	0.09	9.5	0.10	8.7	0.10	8.9	0.09	7.8	0.07	7.5						
				1500	1106		1031		1012		905		789		644		443							
					0.10	10.6	0.11	10.6	0.11	10.6	0.11	9.8	0.11	9.9	0.11	8.4	0.10	8.4						
				1575	1161		1090		1072		972		864		736		568		368					
					0.11	11.3	0.12	11.3	0.12	11.3	0.13	11.2	0.13	11.0	0.13	10.5	0.12	9.5	0.10	9.2				
				1650	1216		1149		1131		1038		936		823		682		497					
					0.13	13.6	0.14	13.6	0.14	13.6	0.15	12.8	0.15	11.7	0.15	12.4	0.15	10.1	0.13	10.1				
		---	---	1750	1290		1227		1210		1124		1029		929		812		661		483			
					0.16	14.9	0.16	14.9	0.17	14.9	0.18	14.8	0.18	13.2	0.18	13.5	0.18	12.8	0.17	11.5	0.15	11.4		
100BE	1/4	100B	1/15*	500	430																			
					0.01	1.6																		
				700	602		391		318															
					0.01	3.7	0.02	3.3	0.01	3.1														
				860	740		581		534		229													
					0.03	5.4	0.03	4.8	0.03	5.1	0.02	4.4												
			1/8*	1000	860		727		691		465													
					0.04	7.0	0.04	6.5	0.04	6.2	0.04	5.9												
				1160	998		885		855		687		467											
					0.06	9.0	0.07	8.6	0.07	8.5	0.07	8.5	0.06	7.7										
			1/3*	1450	1247		1158		1135		1015		877		713		524							
					0.12	12.9	0.13	12.9	0.13	12.9	0.13	11.6	0.13	12.4	0.13	11.4	0.12	11.6						
				1750	1505		1432		1413		1317		1216		1103		977		834		677		517	
					0.22	17.5	0.22	17.5	0.22	17.5	0.23	16.7	0.23	16.0	0.23	16.7	0.23	16.6	0.22	15.7	0.21	16.0	0.19	15.9
120BE	1/2	120B	1/15*	500	572																			
					0.01	1.8																		
				700	802		571		489															
					0.02	3.9	0.02	3.4	0.02	3.2														
				860	985		806		756		450													
					0.03	5.8	0.04	4.8	0.04	4.7	0.04	4.8												
			1/8*	1000	1145		995		955		723		418											
					0.05	7.2	0.06	6.7	0.06	6.3	0.07	6.4	0.06	6.4										
				1160	1328		1201		1168		985		768		496									
					0.08	9.4	0.10	9.4	0.10	9.0	0.10	8.3	0.10	8.0	0.09	8.2								
			1/3*	1450	1660		1560		1535		1399		1251		1085		902		682					
					0.16	13.2	0.18	13.2	0.18	13.2	0.19	11.9	0.20	12.1	0.20	12.5	0.19	11.8	0.18	11.9				
				1750	2004		1922		1901		1793		1678		1557		1427		1284		1132		968	
					0.29	18.0	0.31	18.0	0.31	18.0	0.33	17.9	0.34	16.4	0.35	16.7	0.35	17.7	0.35	16.7	0.34	15.7	0.33	16.3

EC Motor is an Electronically Commutated Motor.
PSC Motor is a Permanent Split Capacitor Motor.

* 3-phase units are supplied with 1/8 HP 860 RPM, 1/4 HP 1160 RPM and 1/2 HP 1750 RPM motors.

NOTES:

1. The AMCA Seal for sound ratings does not apply to units with speed control.
2. Performance certified is for installation Type A: Free inlet, Free outlet.
3. Performance ratings do not include the effects of appurtenances (accessories).
4. Sound ratings shown are loudness values in fan sones at 5 ft. (1.5 m) in a hemispherical free field calculated per AMCA Standard 301-90. Type A: Free inlet fan hemispherical sone levels.
5. Highlighted speeds indicate nominal speeds without speed control on PSC motors. All other speeds are intermediate speeds set with the solid-state speed controller.
6. Speed control on PSC motors is available for ODP 115/60/1 only.

130B – 160B DCRD

EC MOTOR		PSC MOTOR			STATIC PRESSURE (INCHES W.G.)																			
SIZE	MTR HP	SIZE	MTR HP	RPM	0		0.100		0.125		0.250		0.375		0.500		0.625		0.750		0.875		1.000	
					CFM		CFM		CFM		CFM		CFM		CFM		CFM		CFM		CFM		CFM	
					BHP	Sone	BHP	Sone	BHP	Sone	BHP	Sone	BHP	Sone	BHP	Sone	BHP	Sone	BHP	Sone	BHP	Sone	BHP	Sone
130BE	3/4	130B	1/8	500	778		415		276															
					0.01	2.2	0.02	1.9	0.01	1.9														
				700	1089		865		804		364													
					0.04	5.2	0.04	4.6	0.04	4.9	0.04	4.5												
				860	1338		1163		1114		845		456											
					0.07	7.4	0.07	7.0	0.07	6.7	0.08	6.8	0.07	6.8										
			1/4	1000	1556		1408		1368		1157		895		552									
					0.11	9.4	0.11	9.4	0.12	8.9	0.12	9.4	0.12	9.0	0.11	9.0								
				1160	1805		1679		1646		1470		1282		1048		760							
					0.17	12.1	0.18	12.1	0.18	12.1	0.18	11.5	0.19	12.9	0.19	12.1	0.18	12.7						
			1/2	1450	2256		2156		2131		1998		1856		1709		1550		1362		1139		904	
					0.33	17.0	0.34	17.0	0.34	17.0	0.35	17.2	0.36	17.1	0.37	18.0	0.37	18.7	0.37	17.2	0.36	18.0	0.34	18.0
				1750	2723		2641		2620		2513		2402		2285		2164		2041		1910		1763	
					0.58	22	0.59	22	0.59	22	0.60	22	0.62	23	0.62	22	0.63	23	0.64	24	0.65	25	0.65	24
140BE	3/4	140B	1/8	500	884		502		344															
					0.02	2.9	0.02	2.1	0.02	2.1														
				700	1237		999		931		459													
					0.04	6.3	0.05	5.0	0.05	5.1	0.04	4.6												
				860	1520		1334		1283		994		573											
					0.08	9.0	0.08	8.3	0.08	7.8	0.09	7.5	0.08	7.0										
			1/4	1000	1767		1611		1569		1340		1067		688									
					0.13	11.0	0.13	11.0	0.13	10.6	0.13	9.4	0.13	8.7	0.12	9.1								
				1160	2050		1917		1882		1695		1488		1248		940							
					0.20	14.3	0.20	14.3	0.20	14.3	0.21	12.1	0.21	12.3	0.21	11.1	0.19	11.6						
		---	---	1450	2562		2458		2431		2290		2138		1977		1805		1612		1391		1117	
					0.39	19.6	0.39	19.6	0.39	19.6	0.4	18.9	0.4	17.4	0.41	17.3	0.41	18.4	0.41	17.3	0.39	17.0	0.38	17.0
				1750	3092		3006		2984		2872		2753		2628		2497		2362		2220		2068	
					0.68	26	0.69	26	0.69	26	0.70	26	0.70	25	0.71	24	0.71	23	0.72	23	0.72	24	0.72	24
150BE	1	150B	1/8	500	1192		714		571															
					0.03	3.1	0.03	2.4	0.03	2.6														
				700	1670		1350		1267		779													
					0.08	6.0	0.08	5.2	0.08	5.4	0.07	5.3												
				860	2051		1788		1725		1378		965											
					0.14	8.6	0.14	8.1	0.15	7.7	0.15	8.2	0.13	7.8										
			1/4	1000	2385		2157		2102		1822		1499		1142		766							
					0.22	10.9	0.22	10.9	0.23	10.4	0.23	9.8	0.23	9.9	0.21	10.0	0.19	10.1						
				1160	2767		2569		2521		2284		2035		1750		1445		1127		777			
					0.34	13.8	0.35	13.8	0.35	13.8	0.36	12.2	0.36	13.0	0.35	12.8	0.34	12.6	0.31	12.8	0.28	12.6		
	1	---	---	1400	3339		3175		3134		2935		2740		2535		2315		2068		1816		1557	
					0.60	19.4	0.61	19.4	0.61	19.4	0.62	18.3	0.63	16.6	0.63	17.1	0.63	18.2	0.62	16.9	0.60	16.9	0.58	17.5
	2			1750	4174		4042		4010		3847		3688		3532		3375		3210		3040		2859	
					1.17	27	1.18	27	1.18	27	1.20	27	1.21	26	1.22	24	1.23	24	1.24	24	1.24	25	1.23	26
160BE	1**	160B	1/4*	500	1394		936		792															
					0.04	4.3	0.04	3.6	0.04	3.3														
				700	1952		1661		1577		1089													
					0.10	8.7	0.12	7.6	0.12	7.1	0.12	6.9												
				860	2398		2171		2109		1755		1346		854									
					0.19	11.9	0.21	11.9	0.21	11.4	0.22	10.3	0.22	9.8	0.19	9.9								
			1/2*	1000	2788		2597		2546		2265		1941		1585		1197							
					0.30	14.2	0.32	14.2	0.32	14.2	0.34	12.2	0.35	13.0	0.34	12.3	0.31	12.9						
				1160	3234		3071		3028		2801		2546		2262		1956		1644		1278			
					0.46	17.5	0.49	17.5	0.49	17.5	0.52	16.5	0.54	15.7	0.54	16.2	0.54	15.4	0.51	15.8	0.47	15.9		
	2		---	1450	4043		3914		3881		3709		3525		3327		3114		2887		2647		2398	
					0.91	25	0.94	25	0.94	25	0.98	25	1.01	23	1.04	22	1.06	22	1.06	23	1.06	23	1.05	22
				1750	4879		4773		4746		4608		4464		4313		4153		3985		3810		3625	
					1.59	34	1.63	34	1.64	34	1.68	34	1.73	34	1.77	33	1.81	31	1.84	30	1.86	29	1.86	30

EC Motor is an Electronically Commutated Motor.
PSC Motor is a Permanent Split Capacitor Motor.

* 3-phase units are supplied with 1/2 HP 860 RPM and 1 HP 1160 RPM motors.
** Performance available with 1 HP 1160 RPM EC-ODP or 1 HP 1750 RPM EC-TEFC motors. 1160 RPM maximum.

NOTES:

1. The AMCA Seal for sound ratings does not apply to units with speed control.
2. Performance certified is for installation Type A: Free inlet, Free outlet.
3. Performance ratings do not include the effects of appurtenances (accessories).
4. Sound ratings shown are loudness values in fan sones at 5 ft. (1.5 m) in a hemispherical free field calculated per AMCA Standard 301-90. Type A: Free inlet fan hemispherical sone levels.
5. Highlighted speeds indicate nominal speeds without speed control on PSC motors. All other speeds are intermediate speeds set with the solid-state speed controller.
6. Speed control on PSC motors is available for ODP 115/60/1 only.

170B – 180B DCRD

EC MOTOR		PSC MOTOR			STATIC PRESSURE (INCHES W.G.)																							
SIZE	MTR HP	SIZE	MTR HP	RPM	0		0.100		0.125		0.250		0.375		0.500		0.625		0.750		0.875		1.000	
					CFM		CFM		CFM		CFM		CFM		CFM		CFM		CFM		CFM		CFM	
					BHP	Sone	BHP	Sone	BHP	Sone	BHP	Sone	BHP	Sone	BHP	Sone	BHP	Sone	BHP	Sone	BHP	Sone	BHP	Sone
170BE	1	170B	1/4*	500	1669		1183		1031															
					0.05	4.0	0.05	3.6	0.05	3.3														
				700	2337		2015		1929		1421		845											
					0.14	7.8	0.14	7.1	0.14	6.6	0.14	6.1	0.13	6.4										
				860	2871		2613		2546		2185		1755		1293		750							
					0.25	10.8	0.26	10.8	0.26	10.6	0.27	9.6	0.27	8.7	0.25	9.2	0.21	8.7						
			1/2*	1000	3338		3118		3061		2768		2437		2063		1663		1260					
					0.40	13.8	0.40	13.8	0.40	13.8	0.42	12.2	0.43	12.4	0.42	11.5	0.41	11.6	0.38	12.2				
	1			1160	3872		3684		3636		3388		3128		2839		2521		2182		1837		1488	
					0.62	17.4	0.62	17.4	0.63	17.4	0.64	16.5	0.66	15.4	0.67	15.8	0.66	15.7	0.65	14.4	0.63	15.3	0.60	15.4
	2	---	---	1380	4606		4449		4409		4205		3995		3777		3542		3289		3021		2738	
					1.04	22	1.05	22	1.05	22	1.06	22	1.08	21	1.11	20	1.12	20	1.12	21	1.12	21	1.10	19.1
				1600	5341		5205		5171		4997		4819		4638		4451		4256		4048		3829	
					1.63	28	1.63	28	1.63	28	1.64	28	1.66	28	1.69	27	1.72	26	1.75	25	1.75	26	1.75	27
180BE	1	180B	1/2	500	2165		1660		1512		440													
					0.08	5.1	0.08	4.5	0.08	4.8	0.05	4.2												
				700	3031		2693		2601		2096		1496											
					0.21	9.8	0.22	9.5	0.22	9.0	0.23	9.1	0.21	9.2										
				860	3724		3454		3383		3005		2583		2115		1571							
					0.38	13.6	0.40	13.6	0.40	13.6	0.41	12.4	0.42	13.6	0.41	12.8	0.37	13.6						
			1	1000	4330		4100		4041		3729		3392		3025		2631		2195		1696		879	
					0.60	17.6	0.62	17.6	0.62	17.6	0.64	17.1	0.65	16.5	0.66	17.5	0.65	16.8	0.62	17.1	0.57	17.1	0.43	15.3
				1160	5023		4826		4776		4515		4239		3945		3633		3304		2954		2575	
					0.94	23	0.96	23	0.96	23	0.98	23	1.00	21	1.02	21	1.02	22	1.02	22	1.01	20	0.97	21
	2	---	---	1230	5326		5141		5094		4850		4594		4323		4038		3737		3422		3088	
					1.12	25	1.14	25	1.14	25	1.17	25	1.19	24	1.20	23	1.22	23	1.22	25	1.22	24	1.20	23
				1300	5629		5454		5410		5181		4942		4691		4428		4151		3862		3561	
					1.32	27	1.34	27	1.35	27	1.37	27	1.39	27	1.41	25	1.43	25	1.44	26	1.44	26	1.43	25

EC Motor is an Electronically Commutated Motor.
PSC Motor is a Permanent Split Capacitor Motor.

* 3-phase units are supplied with 1/2 HP 860 RPM and 1 HP 1160 RPM motors.

NOTES:

1. The AMCA Seal for sound ratings does not apply to units with speed control.
2. Performance certified is for installation Type A: Free inlet, Free outlet.
3. Performance ratings do not include the effects of appurtenances (accessories).
4. Sound ratings shown are loudness values in fan sones at 5 ft. (1.5 m) in a hemispherical free field calculated per AMCA Standard 301-90. Type A: Free inlet fan hemispherical sone levels.
5. Highlighted speeds indicate nominal speeds without speed control on PSC motors. All other speeds are intermediate speeds set with the solid-state speed controller.
6. Speed control on PSC motors is available for ODP 115/60/1 only.

TCF
TWIN CITY FAN

070D BCRD/BCRD-E

HP	RPM	STATIC PRESSURE (INCHES W.G.) 0	0.125	0.25	0.375	0.50	0.625	0.75	0.875	1.00	1.125	1.25	1.375
		CFM / BHP / Sone	CFM / BHP / Sone	CFM / BHP / Sone	CFM / BHP / Sone	CFM / BHP / Sone	CFM / BHP / Sone	CFM / BHP / Sone	CFM / BHP / Sone	CFM / BHP / Sone	CFM / BHP / Sone	CFM / BHP / Sone	CFM / BHP / Sone
1/4	795	180 / 0.01 / 4.0	85 / 0.01 / 4.0										
	1125	254 / 0.02 / 7.4	197 / 0.02 / 7.4	120 / 0.02 / 7.4									
	1375	311 / 0.03 / 4.4	263 / 0.03 / 6.5	214 / 0.03 / 8.4	145 / 0.03 / 9.1								
	1590	359 / 0.05 / 5.5	316 / 0.05 / 6.3	279 / 0.05 / 7.4	234 / 0.05 / 8.2	169 / 0.04 / 8.4							
	1775	401 / 0.06 / 6.5	362 / 0.06 / 6.6	329 / 0.06 / 6.8	290 / 0.06 / 7.3	251 / 0.06 / 7.9	187 / 0.06 / 7.9						
	1945	440 / 0.08 / 7.4	403 / 0.08 / 7.4	372 / 0.08 / 7.0	340 / 0.08 / 6.9	303 / 0.08 / 7.7	267 / 0.08 / 8.0	206 / 0.08 / 7.8					
	2100	475 / 0.10 / 8.6	441 / 0.10 / 8.7	411 / 0.10 / 8.1	383 / 0.11 / 7.9	350 / 0.11 / 8.4	316 / 0.11 / 9.0	282 / 0.11 / 9.2	222 / 0.10 / 9.1				

MAXIMUM MOTOR FRAME SIZE: 48

075D BCRD/BCRD-E

HP	RPM	STATIC PRESSURE (INCHES W.G.) 0	0.125	0.25	0.375	0.50	0.625	0.75	0.875	1.00	1.125	1.25	1.375
		CFM / BHP / Sone	CFM / BHP / Sone	CFM / BHP / Sone	CFM / BHP / Sone	CFM / BHP / Sone	CFM / BHP / Sone	CFM / BHP / Sone	CFM / BHP / Sone	CFM / BHP / Sone	CFM / BHP / Sone	CFM / BHP / Sone	CFM / BHP / Sone
1/4	940	322 / 0.02 / 3.7	217 / 0.02 / 3.5										
	1060	363 / 0.02 / 4.4	278 / 0.02 / 4.5										
	1180	404 / 0.03 / 5.0	327 / 0.03 / 4.7	214 / 0.03 / 4.7									
	1300	445 / 0.04 / 5.5	372 / 0.04 / 5.2	291 / 0.05 / 5.3									
	1420	486 / 0.05 / 6.0	419 / 0.06 / 6.0	355 / 0.06 / 5.6	242 / 0.06 / 5.4								
	1540	527 / 0.06 / 6.6	467 / 0.07 / 6.6	412 / 0.07 / 6.2	327 / 0.08 / 6.5	167 / 0.06 / 5.6							
	1660	568 / 0.08 / 7.5	514 / 0.09 / 7.5	459 / 0.09 / 7.0	393 / 0.09 / 7.4	296 / 0.09 / 6.7							
	1780	609 / 0.10 / 8.5	560 / 0.11 / 8.5	504 / 0.11 / 8.0	456 / 0.11 / 7.9	378 / 0.12 / 8.4	260 / 0.11 / 7.5						
	1900	650 / 0.12 / 9.4	605 / 0.13 / 9.4	550 / 0.14 / 9.2	510 / 0.14 / 8.7	445 / 0.14 / 9.2	365 / 0.14 / 8.9	225 / 0.12 / 8.1					

MAXIMUM MOTOR FRAME SIZE: 48

085D BCRD/BCRD-E

HP	RPM	STATIC PRESSURE (INCHES W.G.) 0	0.125	0.25	0.375	0.50	0.625	0.75	0.875	1.00	1.125	1.25	1.50
		CFM / BHP / Sone	CFM / BHP / Sone	CFM / BHP / Sone	CFM / BHP / Sone	CFM / BHP / Sone	CFM / BHP / Sone	CFM / BHP / Sone	CFM / BHP / Sone	CFM / BHP / Sone	CFM / BHP / Sone	CFM / BHP / Sone	CFM / BHP / Sone
1/4	715	273 / 0.009 / 2.4	180 / 0.01 / 2.1										
	860	329 / 0.016 / 3.8	260 / 0.018 / 3.2	122 / 0.015 / 3.4									
	940	359 / 0.02 / 4.5	298 / 0.022 / 3.9	204 / 0.023 / 4.1									
	1200	458 / 0.042 / 7.4	413 / 0.044 / 7	359 / 0.048 / 6.3	286 / 0.048 / 6.6	143 / 0.04 / 6.4							
	1450	554 / 0.074 / 11.5	517 / 0.076 / 12.1	477 / 0.08 / 10.2	430 / 0.084 / 10	373 / 0.085 / 10	292 / 0.082 / 10.7						
	1600	611 / 0.1 / 15	578 / 0.102 / 15.1	543 / 0.105 / 13.9	503 / 0.111 / 13.1	459 / 0.114 / 12.7	404 / 0.114 / 13.6	330 / 0.111 / 13.8	214 / 0.097 / 13.6				
	1750	668 / 0.13 / 17.3	639 / 0.13 / 17.5	607 / 0.14 / 17.1	572 / 0.14 / 15.4	534 / 0.15 / 15.1	492 / 0.15 / 14.8	441 / 0.15 / 15.8	374 / 0.15 / 15.9	284 / 0.13 / 15.9			
	1880	718 / 0.16 / 19.3	691 / 0.16 / 19.3	661 / 0.17 / 19.9	630 / 0.17 / 17.1	596 / 0.18 / 17.1	560 / 0.18 / 17.2	519 / 0.19 / 16.5	469 / 0.19 / 17.4	408 / 0.18 / 18.3	328 / 0.17 / 18.3		
	2000	764 / 0.2 / 22	738 / 0.2 / 22	711 / 0.2 / 22	682 / 0.2 / 21	652 / 0.21 / 19.3	618 / 0.22 / 19.2	583 / 0.22 / 18.6	543 / 0.22 / 18.6	495 / 0.22 / 19.9	437 / 0.22 / 20	365 / 0.21 / 20	
	2110	806 / 0.23 / 24	782 / 0.23 / 24	756 / 0.23 / 24	729 / 0.24 / 23	701 / 0.24 / 21	671 / 0.25 / 21	638 / 0.26 / 21	603 / 0.26 / 20	564 / 0.26 / 21	517 / 0.26 / 22	462 / 0.26 / 22	304 / 0.23 / 22

MAXIMUM MOTOR FRAME SIZE: 48

NOTES:
1. Performance certified is for Installation Type A: Free inlet, free outlet.
2. Power rating (BHP) does not include transmission losses.
3. Performance ratings do not include the effects of appurtenances (accessories).
4. The sound ratings shown are loudness values in fan sones at 5 ft. (1.5 m) in a hemispherical free field calculated per AMCA Standard 301.
5. Values shown are for installation Type A: Free inlet fan hemispherical sone levels.

100D BCRD/BCRD-E

HP	RPM	STATIC PRESSURE (INCHES W.G.)																							
		0		0.125		0.25		0.375		0.50		0.625		0.75		0.875		1.00		1.125		1.25		1.375	
		CFM		CFM		CFM		CFM		CFM		CFM		CFM		CFM		CFM		CFM		CFM		CFM	
		BHP	Sone	BHP	Sone	BHP	Sone	BHP	Sone	BHP	Sone	BHP	Sone	BHP	Sone	BHP	Sone	BHP	Sone	BHP	Sone	BHP	Sone	BHP	Sone
1/4	775	725		591		448																			
		0.03	4.8	0.03	4.2	0.03	3.9																		
	925	865		749		651		498																	
		0.05	6.5	0.06	5.7	0.06	6.3	0.06	5.4																
	1250	1169		1080		999		924		856		755													
		0.13	10.0	0.14	10.1	0.14	8.7	0.14	9.3	0.15	10.0	0.15	8.2												
	1510	1412		1337		1267		1202		1139		1081		1024		946		812							
		0.23	14.0	0.24	14.0	0.24	12.3	0.25	11.6	0.25	11.8	0.26	12.7	0.26	12.7	0.26	10.8	0.25	10.4						
1/3	1590	1487		1416		1349		1285		1225		1167		1114		1057		970		834					
		0.26	14.9	0.27	14.9	0.28	13.6	0.29	12.6	0.29	12.5	0.30	13.3	0.30	14.1	0.30	13.5	0.30	11.0	0.29	11.2				
	1665	1557		1489		1424		1363		1305		1248		1196		1145		1085		990		851			
		0.30	16.1	0.31	16.1	0.32	14.9	0.33	13.8	0.33	13.3	0.34	13.6	0.34	14.5	0.35	15.0	0.35	13.7	0.34	12.1	0.33	12.2		

MAXIMUM MOTOR FRAME SIZE: 56

100DHP BCRD/BCRD-E

HP	RPM	STATIC PRESSURE (INCHES W.G.)																							
		0.125		0.25		0.50		0.625		0.75		0.875		1.00		1.25		1.50		1.75		2.00		2.25	
		CFM		CFM		CFM		CFM		CFM		CFM		CFM		CFM		CFM		CFM		CFM		CFM	
		BHP	Sone	BHP	Sone	BHP	Sone	BHP	Sone	BHP	Sone	BHP	Sone	BHP	Sone	BHP	Sone	BHP	Sone	BHP	Sone	BHP	Sone	BHP	Sone
1/4	1275	445		417		241																			
		0.052	8.5	0.055	7.5	0.055	7.9																		
	1400	497		472		340		243																	
		0.069	11	0.071	9.5	0.076	9.5	0.071	9.7																
	1600	578		557		459		404		330		214													
		0.102	15.1	0.104	13.9	0.114	12.7	0.114	13.6	0.111	13.8	0.097	13.6												
	1870	687		669		592		554		513		463		400											
		0.16	19.2	0.16	19.2	0.18	17.4	0.18	16.5	0.18	16.5	0.18	17.3	0.18	18.3										
	2140	793		778		714		684		653		619		581		485									
		0.24	24	0.24	25	0.25	22	0.26	22	0.27	21	0.27	21	0.27	21	0.27	22								
	2245	835		820		760		732		703		672		639		560		451		267					
		0.28	26	0.28	28	0.29	24	0.3	24	0.31	24	0.31	23	0.32	22	0.32	24	0.3	25	0.26	24				
	2350	876		862		805		779		752		724		694		625		536		415					
		0.32	28	0.32	30	0.33	27	0.34	25	0.35	26	0.36	26	0.36	24	0.36	26	0.36	26	0.34	27				
	2525	944		932		879		856		832		807		780		723		655		569		457			
		0.4	33	0.4	33	0.41	33	0.41	29	0.42	29	0.43	29	0.44	29	0.45	28	0.45	29	0.44	30	0.42	30		
	2655	995		983		934		912		889		866		842		789		731		661		574		460	
		0.46	36	0.46	36	0.47	36	0.48	34	0.48	32	0.49	31	0.5	31	0.52	31	0.52	31	0.52	32	0.51	33	0.48	33

MAXIMUM MOTOR FRAME SIZE: 56

120D BCRD/BCRD-E

HP	RPM	STATIC PRESSURE (INCHES W.G.)																							
		0		0.125		0.25		0.375		0.50		0.625		0.75		0.875		1.00		1.125		1.25		1.50	
		CFM		CFM		CFM		CFM		CFM		CFM		CFM		CFM		CFM		CFM		CFM		CFM	
		BHP	Sone	BHP	Sone	BHP	Sone	BHP	Sone	BHP	Sone	BHP	Sone	BHP	Sone	BHP	Sone	BHP	Sone	BHP	Sone	BHP	Sone	BHP	Sone
1/4	575	745		563																					
		0.02	3.1	0.02	2.7																				
	825	1068		940		817		633																	
		0.06	6.3	0.06	5.4	0.07	5.6	0.07	4.9																
	1050	1360		1255		1163		1067		942															
		0.12	9.2	0.12	8.7	0.13	7.9	0.13	7.9	0.14	8.2														
	1300	1684		1598		1517		1444		1371		1284		1181		1068									
		0.22	12.6	0.23	12.6	0.24	11.5	0.25	10.8	0.25	10.7	0.26	11.3	0.26	11.3	0.26	10.1								
1/3	1365	1768		1686		1609		1537		1469		1393		1302		1200		1084							
		0.25	13.6	0.27	13.6	0.28	12.7	0.28	11.7	0.29	11.6	0.30	11.7	0.30	12.3	0.30	11.7	0.30	10.3						
	1430	1852		1774		1699		1629		1565		1497		1417		1324		1226		1099					
		0.29	14.5	0.30	14.5	0.32	13.8	0.32	12.9	0.33	12.4	0.34	12.5	0.34	13.1	0.35	13.3	0.35	12.5	0.34	11.3				
1/2	1540	1994		1921		1852		1785		1723		1663		1598		1523		1437		1346		1245			
		0.36	16.4	0.38	16.4	0.39	15.7	0.40	14.7	0.41	13.9	0.42	13.8	0.42	14.0	0.43	14.7	0.43	14.8	0.43	14.0	0.43	12.6		
	1650	2137		2068		2003		1940		1880		1824		1767		1705		1634		1555		1470		1265	
		0.45	17.9	0.46	17.9	0.48	17.9	0.49	16.8	0.50	15.9	0.51	15.5	0.51	15.1	0.52	15.6	0.53	16.0	0.53	16.5	0.53	15.9	0.53	13.5

MAXIMUM MOTOR FRAME SIZE: 56

NOTES:
1. Performance certified is for Installation Type A: Free inlet, free outlet.
2. Power rating (BHP) does not include transmission losses.
3. Performance ratings do not include the effects of appurtenances (accessories).
4. The sound ratings shown are loudness values in fan sones at 5 ft. (1.5 m) in a hemispherical free field calculated per AMCA Standard 301.
5. Values shown are for installation Type A: Free inlet fan hemispherical sone levels.

140D BCRD/BCRD-E

Outlet Area = 2.34 ft² **Fan Efficiency Grade: FEG67**

HP	RPM	STATIC PRESSURE (INCHES W.G.)																							
		0		0.125		0.25		0.375		0.5		0.625		0.75		0.875		1.00		1.25		1.50		1.75	
		CFM		CFM		CFM		CFM		CFM		CFM		CFM		CFM		CFM		CFM		CFM		CFM	
		BHP	Sone	BHP	Sone	BHP	Sone	BHP	Sone	BHP	Sone	BHP	Sone	BHP	Sone	BHP	Sone	BHP	Sone	BHP	Sone	BHP	Sone	BHP	Sone
1/4	475	850		584																					
		0.02	2.2	0.02	2.0																				
	550	984		762																					
		0.03	3.2	0.03	3.0																				
	825	1477		1345		1183		1017																	
		0.09	6.8	0.10	6.7	0.11	6.2	0.11	6.2																
	1105	1978		1883		1779		1659		1536		1415		1264											
		0.22	11.0	0.24	11.0	0.25	10.5	0.25	9.6	0.26	10.2	0.26	10.3	0.26	8.7										
1/3	1165	2085		1996		1898		1788		1670		1558		1433											
		0.26	12.0	0.28	12.0	0.29	11.6	0.30	10.7	0.30	10.8	0.30	11.6	0.30	10.6										
	1225	2193		2108		2016		1915		1803		1694		1586		1457									
		0.30	13.0	0.32	13.0	0.33	13.0	0.34	11.7	0.35	11.6	0.35	12.3	0.35	12.4	0.35	11.1								
1/2	1310	2345		2266		2181		2091		1989		1883		1783		1681		1559							
		0.37	14.4	0.39	14.4	0.41	14.8	0.42	13.8	0.42	13.3	0.43	13.4	0.43	14.2	0.43	13.9	0.43	12.1						
	1400	2506		2432		2354		2272		2181		2083		1985		1892		1796		1544					
		0.45	16.2	0.47	16.2	0.49	16.2	0.51	16.1	0.51	15.6	0.52	15.2	0.52	15.4	0.52	16.3	0.53	15.9	0.52	12.7				
3/4	1500	2685		2616		2544		2469		2388		2300		2208		2117		2031		1840					
		0.55	19.0	0.58	19.0	0.60	19.0	0.61	18.6	0.63	17.9	0.63	16.9	0.64	16.7	0.64	17.3	0.64	17.9	0.65	16.2				
	1605	2873		2809		2742		2673		2600		2522		2438		2351		2266		2104		1911			
		0.68	21	0.70	21	0.73	21	0.75	21	0.76	19.9	0.77	18.8	0.78	18.5	0.78	18.2	0.79	18.9	0.79	19.4	0.79	16.9		
1	1685	3016		2955		2892		2827		2758		2687		2609		2527		2445		2288		2125		1921	
		0.79	23	0.81	23	0.84	23	0.86	23	0.88	22	0.89	21	0.90	19.7	0.90	19.5	0.91	19.6	0.91	21	0.92	19.9	0.91	16.7
	1765	3159		3101		3041		2979		2915		2848		2777		2701		2622		2468		2320		2150	
		0.90	24	0.93	24	0.96	24	0.98	24	1.00	24	1.02	23	1.03	22	1.03	21	1.04	21	1.05	22	1.05	22	1.05	20

MAXIMUM MOTOR FRAME SIZE: 143T

140DHP BCRD/BCRD-E

HP	RPM	STATIC PRESSURE (INCHES W.G.)																							
		0.50		0.625		0.75		0.875		1.00		1.25		1.50		1.75		2.00		2.25		2.50		2.75	
		CFM		CFM		CFM		CFM		CFM		CFM		CFM		CFM		CFM		CFM		CFM		CFM	
		BHP	Sone	BHP	Sone	BHP	Sone	BHP	Sone	BHP	Sone	BHP	Sone	BHP	Sone	BHP	Sone	BHP	Sone	BHP	Sone	BHP	Sone	BHP	Sone
1/4	1310	499																							
		0.07	6.4																						
	1750	870		811		747		677		600															
		0.17	11.6	0.17	12.2	0.17	12.4	0.17	10.9	0.16	10.4														
	2015	1069		1018		966		913		857		731													
		0.25	14.7	0.26	13.9	0.26	14	0.26	14.9	0.26	15.0	0.25	12.4												
1/3	2125	1147		1101		1052		1003		952		841		715											
		0.30	16.4	0.30	15.2	0.30	15	0.30	15.3	0.30	16.1	0.30	14.7	0.29	13.8										
	2235	1224		1182		1136		1089		1043		943		830											
		0.34	17.8	0.35	16.9	0.35	16	0.35	16	0.35	16.5	0.35	16.7	0.34	14.2										
1/2	2400	1337		1300		1259		1217		1173		1085		989		882									
		0.42	21	0.42	19.7	0.43	18.8	0.43	17.9	0.43	17.8	0.43	19.1	0.43	18.5	0.43	15.7								
	2560	1445		1411		1375		1337		1296		1215		1130		1039		937		825					
		0.51	23	0.51	23	0.52	22	0.52	21	0.52	19.9	0.53	20	0.53	21	0.52	20	0.52	17.4	0.5	18.3				
3/4	2790	1597		1567		1536		1503		1468		1394		1319		1242		1159		1070		973			
		0.65	28	0.66	26	0.66	26	0.67	25	0.67	24	0.68	23	0.68	23	0.68	24	0.68	24	0.67	21	0.66	21		
	2920	1682		1654		1625		1594		1562		1493		1422		1349		1274		1194		1107		1014	
		0.74	29	0.75	29	0.76	28	0.76	27	0.77	26	0.78	25	0.78	24	0.78	25	0.78	26	0.78	25	0.77	22	0.76	22

MAXIMUM MOTOR FRAME SIZE: 56

NOTES:
1. Performance certified is for Installation Type A: Free inlet, free outlet.
2. Power rating (BHP) does not include transmission losses.
3. Performance ratings do not include the effects of appurtenances (accessories).
4. The sound ratings shown are loudness values in fan sones at 5 ft. (1.5 m) in a hemispherical free field calculated per AMCA Standard 301.
5. Values shown are for installation Type A: Free inlet fan hemispherical sone levels.

160D BCRD/BCRD-E

Outlet Area = 2.53 ft² **Fan Efficiency Grade: FEG75**

HP	RPM	STATIC PRESSURE (INCHES W.G.)																							
		0		0.125		0.25		0.375		0.50		0.625		0.75		0.875		1.00		1.25		1.50		1.75	
		CFM		CFM		CFM		CFM		CFM		CFM		CFM		CFM		CFM		CFM		CFM		CFM	
		BHP	Sone	BHP	Sone	BHP	Sone	BHP	Sone	BHP	Sone	BHP	Sone	BHP	Sone	BHP	Sone	BHP	Sone	BHP	Sone	BHP	Sone	BHP	Sone
1/4	475	1321		1001																					
		0.03	3.2	0.04	2.8																				
	625	1738		1519		1235																			
		0.07	5.5	0.08	4.8	0.08	4.9																		
	775	2155		1987		1783		1551		1199															
		0.13	7.9	0.14	7.6	0.15	6.5	0.15	7.0	0.15	5.8														
	930	2586		2449		2296		2117		1927		1697													
		0.23	10.6	0.24	10.6	0.25	9.6	0.26	8.7	0.26	9.2	0.26	9.1												
1/3	975	2711		2582		2438		2273		2093		1898		1634											
		0.26	11.4	0.27	11.4	0.28	10.4	0.30	9.7	0.30	9.8	0.30	10.0	0.30	8.8										
	1020	2837		2713		2578		2425		2255		2078		1865		1547									
		0.30	12.1	0.31	12.1	0.32	11.5	0.33	10.4	0.34	10.0	0.35	10.6	0.34	10.3	0.33	9.0								
1/2	1100	3059		2945		2822		2687		2535		2376		2209		2006		1724							
		0.38	13.3	0.39	13.3	0.40	13.0	0.41	12.0	0.43	11.2	0.43	11.4	0.44	12.0	0.43	11.5	0.42	10.1						
	1180	3282		3176		3063		2942		2807		2661		2512		2354		2164							
		0.46	14.5	0.48	14.5	0.49	14.5	0.50	13.6	0.52	12.7	0.53	12.3	0.54	12.8	0.54	13.2	0.53	12.6						
3/4	1260	3504		3405		3301		3190		3070		2938		2800		2660		2510		2116					
		0.57	16.2	0.58	16.2	0.59	16.2	0.61	15.4	0.62	14.5	0.64	13.7	0.65	13.6	0.65	14.1	0.65	14.5	0.64	13.0				
	1340	3727		3634		3537		3435		3326		3207		3080		2949		2817		2515		2059			
		0.68	17.6	0.70	17.6	0.71	17.6	0.73	17.2	0.74	16.2	0.76	15.3	0.77	14.7	0.78	14.7	0.79	15.5	0.78	15.5	0.75	13.8		
1	1405	3907		3819		3727		3631		3529		3420		3303		3179		3054		2791		2453			
		0.78	18.6	0.8	18.6	0.82	18.6	0.83	18.6	0.85	17.8	0.86	16.7	0.88	16.3	0.89	15.8	0.90	16.2	0.91	17.2	0.89	16.5		
	1475	4102		4018		3931		3840		3745		3645		3537		3422		3304		3063		2786		2410	
		0.91	20	0.92	20	0.94	20	0.96	19.7	0.97	19.4	0.99	18.4	1.01	17.6	1.02	16.9	1.04	16.8	1.05	17.9	1.05	18.2	1.02	16.0

MAXIMUM MOTOR FRAME SIZE: 143T

160DHP BCRD/BCRD-E

Outlet Area = 2.53 ft² **Fan Efficiency Grade: FEG63**

HP	RPM	STATIC PRESSURE (INCHES W.G.)																							
		0.50		0.625		0.75		0.875		1.00		1.25		1.50		1.75		2.00		2.25		2.50		2.75	
		CFM		CFM		CFM		CFM		CFM		CFM		CFM		CFM		CFM		CFM		CFM		CFM	
		BHP	Sone	BHP	Sone	BHP	Sone	BHP	Sone	BHP	Sone	BHP	Sone	BHP	Sone	BHP	Sone	BHP	Sone	BHP	Sone	BHP	Sone	BHP	Sone
1/4	1100	1021		872																					
		0.16	8.7	0.15	7.6																				
	1225	1231		1133		1003		826																	
		0.21	9.8	0.21	10.2	0.21	9.3	0.21	8.4																
	1300	1352		1263		1162		1029		850															
		0.25	10.2	0.25	11.1	0.26	11.1	0.26	9.8	0.24	9.0														
1/3	1370	1464		1377		1291		1186		1051															
		0.29	11.0	0.29	11.7	0.30	12.4	0.30	11.8	0.30	9.7														
	1435	1567		1482		1401		1314		1204															
		0.34	11.7	0.33	12.0	0.34	12.7	0.34	12.8	0.35	12.2														
1/2	1545	1737		1658		1580		1505		1425		1208													
		0.42	13.4	0.42	12.9	0.42	13.4	0.42	14.2	0.43	14.4	0.43	11.9												
	1655	1902		1830		1757		1685		1615		1454		1229											
		0.52	14.6	0.52	14.4	0.51	14.4	0.51	14.9	0.52	15.8	0.53	15.5	0.52	12.5										
3/4	1770	2071		2006		1938		1869		1802		1669		1503		1280									
		0.63	16.7	0.64	16.2	0.63	16.1	0.63	16.1	0.63	16.5	0.64	17.4	0.65	16.5	0.63	13.6								
	1890	2244		2185		2123		2059		1995		1871		1741		1575		1362							
		0.77	18.6	0.77	17.9	0.77	17.4	0.77	17.9	0.76	17.3	0.77	18.4	0.79	18.9	0.79	17.6	0.77	14.8						
1	1980	2372		2317		2259		2199		2138		2017		1899		1764		1590		1374					
		0.88	20	0.89	19.7	0.89	18.9	0.89	18.7	0.88	18.5	0.88	18.8	0.90	20	0.91	20	0.90	17.7	0.88	16.3				
	2075	2506		2454		2401		2345		2287		2169		2057		1941		1801		1626		1410			
		1.01	21	1.02	21	1.02	21	1.02	19.9	1.02	19.8	1.01	19.8	1.02	21	1.04	22	1.05	21	1.04	18.5	1.00	17.4		

MAXIMUM MOTOR FRAME SIZE: 143T

NOTES:
1. Performance certified is for Installation Type A: Free inlet, free outlet.
2. Power rating (BHP) does not include transmission losses.
3. Performance ratings do not include the effects of appurtenances (accessories).
4. The sound ratings shown are loudness values in fan sones at 5 ft. (1.5 m) in a hemispherical free field calculated per AMCA Standard 301.
5. Values shown are for installation Type A: Free inlet fan hemispherical sone levels.

TCF
TWIN CITY FAN

180D BCRD/BCRD-E

Outlet Area = 3.37 ft² **Fan Efficiency Grade: FEG60**

HP	RPM	STATIC PRESSURE (INCHES W.G.)											
		0	0.125	0.25	0.375	0.5	0.75	1.00	1.25	1.50	1.75	2.00	2.25
		CFM BHP Sone	CFM BHP Sone	CFM BHP Sone	CFM BHP Sone	CFM BHP Sone	CFM BHP Sone	CFM BHP Sone	CFM BHP Sone	CFM BHP Sone	CFM BHP Sone	CFM BHP Sone	CFM BHP Sone
1/4	475	2320 0.08 5.5	1826 0.09 4.2	1376 0.10 4.5									
	575	2809 0.15 8.0	2389 0.16 6.5	2036 0.17 6.4	1632 0.17 6.2								
	660	3224 0.22 9.9	2857 0.24 8.9	2516 0.25 7.7	2225 0.26 8.3	1852 0.26 7.9							
1/3	690	3371 0.25 10.6	3020 0.27 9.6	2685 0.29 8.2	2409 0.30 8.8	2084 0.30 9.0							
	725	3542 0.29 11.4	3207 0.31 10.8	2882 0.33 8.9	2613 0.34 9.3	2328 0.35 10.0							
1/2	780	3810 0.37 13.0	3498 0.39 12.3	3192 0.41 10.4	2924 0.42 10	2681 0.43 11.1	2019 0.43 9.5						
	830	4055 0.44 14.3	3761 0.47 13.9	3472 0.48 11.8	3203 0.50 11.2	2977 0.51 11.8	2440 0.53 12.1						
3/4	890	4348 0.54 15.8	4073 0.57 15.8	3804 0.59 13.9	3541 0.61 12.6	3316 0.62 12.6	2864 0.64 14.0	2229 0.63 11.3					
	950	4641 0.66 17.6	4383 0.69 17.6	4131 0.71 15.9	3880 0.73 14.2	3652 0.75 14.0	3250 0.77 15.0	2752 0.79 15.0	1968 0.71 12.1				
1	1000	4885 0.77 19.0	4640 0.80 19	4400 0.83 17.2	4160 0.85 15.7	3933 0.87 15.0	3550 0.90 15.8	3119 0.92 17.0	2540 0.89 14.2				
	1045	5105 0.88 20	4870 0.91 20	4640 0.94 19.1	4411 0.96 17.2	4187 0.98 16.1	3808 1.01 16.6	3422 1.04 17.9	2940 1.05 17.0	2215 0.95 14.2			
1-1/2	1120	5471 1.08 22	5252 1.12 22	5036 1.15 22	4823 1.18 20	4610 1.20 18.8	4229 1.23 17.9	3894 1.26 19.1	3501 1.29 20	3010 1.28 18.0	2273 1.15 15.8		
	1195	5838 1.32 25	5632 1.35 25	5429 1.39 25	5230 1.42 23	5028 1.44 21	4649 1.48 19.7	4331 1.52 20	3998 1.55 22	3608 1.57 22	3117 1.54 19.5	2397 1.39 17.6	
2	1255	6131 1.53 27	5935 1.56 27	5741 1.60 27	5551 1.63 25	5360 1.66 23	4988 1.71 22	4670 1.75 21	4370 1.78 22	4026 1.81 24	3627 1.82 23	3115 1.75 20	
	1315	6424 1.76 29	6237 1.80 29	6052 1.83 29	5869 1.87 27	5688 1.90 26	5326 1.95 23	5005 1.99 23	4722 2.03 23	4417 2.06 25	4071 2.09 26	3662 2.08 24	3137 1.99 21

MAXIMUM MOTOR FRAME SIZE: 145T

180DHP BCRD/BCRD-E

Outlet Area = 3.37 ft² **Fan Efficiency Grade: FEG67**

HP	RPM	STATIC PRESSURE (INCHES W.G.)											
		0.50	0.75	1.00	1.25	1.50	1.75	2.00	2.25	2.50	2.75	3.00	3.25
		CFM BHP Sone	CFM BHP Sone	CFM BHP Sone	CFM BHP Sone	CFM BHP Sone	CFM BHP Sone	CFM BHP Sone	CFM BHP Sone	CFM BHP Sone	CFM BHP Sone	CFM BHP Sone	CFM BHP Sone
1/4	775	1089 0.14 6.9											
	890	1597 0.22 9.9											
	935	1755 0.26 10.5	1260 0.25 8.6										
1/3	980	1900 0.30 10.8	1488 0.30 10.8										
	1025	2035 0.34 11.6	1700 0.34 12.3										
1/2	1105	2260 0.42 12.9	2010 0.43 13.7	1585 0.42 12.0									
	1185	2476 0.51 14.8	2280 0.53 14.8	1969 0.53 15.3	1502 0.50 12.0								
3/4	1270	2701 0.63 16.9	2535 0.64 15.9	2300 0.65 16.9	1945 0.65 15.6	1451 0.59 12.8							
	1355	2925 0.76 18.7	2772 0.78 17.4	2590 0.79 17.5	2325 0.79 18.4	1950 0.78 15.5							
1	1420	3096 0.87 20	2948 0.89 18.7	2792 0.90 18.4	2572 0.91 19.5	2270 0.91 18.5	1880 0.87 14.6						
	1490	3281 1.00 22	3135 1.02 19.8	2994 1.04 19.2	2814 1.05 20	2569 1.05 20	2238 1.04 18.1	1843 0.98 15.4					
1-1/2	1595	3557 1.21 25	3413 1.24 22	3284 1.26 21	3143 1.28 21	2957 1.29 22	2718 1.29 22	2404 1.28 20	2046 1.22 17.0				
	1705	3844 1.47 29	3702 1.50 26	3579 1.53 24	3457 1.55 23	3315 1.57 24	3132 1.58 25	2905 1.58 25	2615 1.57 22	2289 1.52 19.5			
2	1790	4065 1.70 33	3926 1.73 28	3804 1.76 26	3689 1.78 25	3568 1.81 25	3418 1.82 25	3230 1.83 27	3006 1.82 27	2721 1.81 25	2411 1.76 21	2004 1.63 20	
	1875	4286 1.94 36	4150 1.98 31	4028 2.01 29	3918 2.04 28	3807 2.06 27	3683 2.08 27	3527 2.10 28	3339 2.10 28	3119 2.10 28	2842 2.08 26	2546 2.03 22	2178 1.91 22

MAXIMUM MOTOR FRAME SIZE: 145T

NOTES:
1. Performance certified is for Installation Type A: Free inlet, free outlet.
2. Power rating (BHP) does not include transmission losses.
3. Performance ratings do not include the effects of appurtenances (accessories).
4. The sound ratings shown are loudness values in fan sones at 5 ft. (1.5 m) in a hemispherical free field calculated per AMCA Standard 301.
5. Values shown are for installation Type A: Free inlet fan hemispherical sone levels.

210D BCRD/BCRD-E

Outlet Area = 4.61 ft² **Fan Efficiency Grade: FEG56**

HP	RPM	STATIC PRESSURE (INCHES W.G.)																							
		0		0.125		0.25		0.375		0.50		0.625		0.75		1.00		1.25		1.50		1.75		2.00	
		CFM		CFM		CFM		CFM		CFM		CFM		CFM		CFM		CFM		CFM		CFM		CFM	
		BHP	Sone	BHP	Sone	BHP	Sone	BHP	Sone	BHP	Sone	BHP	Sone	BHP	Sone	BHP	Sone	BHP	Sone	BHP	Sone	BHP	Sone	BHP	Sone
1/4	480	3078		2673		2193		1535																	
		0.15	7.0	0.17	6.2	0.18	6.1	0.18	5.2																
	535	3431		3080		2646		2203		1471															
		0.21	8.7	0.23	7.9	0.25	6.9	0.26	7.2	0.24	6.3														
1/3	550	3527		3188		2766		2346		1709															
		0.23	9.2	0.25	8.5	0.27	7.2	0.28	7.8	0.26	6.5														
	595	3816		3507		3125		2747		2311		1588													
		0.29	10.5	0.31	10.1	0.33	8.3	0.35	8.8	0.35	8.2	0.32	7.4												
1/2	650	4168		3890		3558		3199		2845		2407		1705											
		0.37	12.5	0.40	12.5	0.42	10.2	0.44	9.8	0.46	10.5	0.46	9.1	0.42	8.5										
	680	4361		4096		3789		3439		3111		2739		2188											
		0.43	13.4	0.45	13.4	0.48	11.4	0.50	10.5	0.52	11.3	0.53	10.8	0.50	9.3										
3/4	720	4617		4369		4089		3758		3446		3120		2732											
		0.51	15.1	0.53	15.1	0.56	13.3	0.59	11.6	0.61	12.2	0.63	12.7	0.63	11.2										
	770	4938		4707		4452		4154		3850		3562		3244		2298									
		0.62	17.0	0.65	17.0	0.68	15.7	0.70	13.7	0.73	13.3	0.76	14.3	0.77	14.3	0.72	11.8								
1	800	5130		4909		4667		4389		4089		3812		3520		2745									
		0.70	18.2	0.72	18.2	0.75	17.2	0.78	15.0	0.81	14.3	0.84	14.8	0.86	15.4	0.83	12.5								
	855	5483		5277		5054		4808		4527		4257		3999		3412		2478							
		0.85	20	0.88	20	0.91	19.2	0.94	17.6	0.97	16.1	1.00	16.1	1.03	16.7	1.05	16.3	0.97	14.1						
1-1/2	900	5772		5577		5368		5141		4882		4616		4369		3848		3148							
		0.99	22	1.02	22	1.05	21	1.09	19.8	1.12	18.1	1.15	17.3	1.19	17.7	1.23	18.4	1.20	15.3						
	975	6253		6073		5884		5681		5459		5213		4970		4514		4005		3292					
		1.26	25	1.29	25	1.33	25	1.36	23	1.40	22	1.44	20	1.47	19.6	1.54	21	1.56	20	1.50	17.5				
2	1010	6477		6304		6122		5929		5721		5488		5248		4806		4337		3766		2905			
		1.40	27	1.44	27	1.47	27	1.51	26	1.54	24	1.58	22	1.62	21	1.69	22	1.73	22	1.72	19.1	1.6	18.2		
	1075	6894		6732		6563		6385		6196		5989		5765		5333		4918		4455		3864		3028	
		1.69	31	1.73	31	1.76	31	1.80	29	1.84	27	1.88	25	1.92	24	2.00	23	2.07	24	2.10	24	2.06	20	1.92	20

MAXIMUM MOTOR FRAME SIZE: 145T

210DHP BCRD/BCRD-E

Outlet Area = 4.61 ft² **Fan Efficiency Grade: FEG60**

HP	RPM	STATIC PRESSURE (INCHES W.G.)																							
		0.50		0.75		1.00		1.25		1.50		1.75		2.00		2.25		2.50		2.75		3.00		3.25	
		CFM		CFM		CFM		CFM		CFM		CFM		CFM		CFM		CFM		CFM		CFM		CFM	
		BHP	Sone	BHP	Sone	BHP	Sone	BHP	Sone	BHP	Sone	BHP	Sone	BHP	Sone	BHP	Sone	BHP	Sone	BHP	Sone	BHP	Sone	BHP	Sone
1/2	700	2532		1925																					
		0.37	9.9	0.40	10.1																				
	775	3001		2538		1900																			
		0.48	11.4	0.52	12.5	0.53	12.0																		
3/4	810	3215		2788		2238																			
		0.53	12.4	0.59	12.8	0.61	12.9																		
	875	3605		3214		2779		2217																	
		0.65	14.5	0.71	13.7	0.76	15.1	0.77	14.5																
1	900	3752		3371		2968		2453																	
		0.70	15.2	0.76	14.5	0.82	15.4	0.84	15.3																
	970	4152		3803		3452		3041		2541															
		0.86	18.2	0.92	16.2	0.99	16.8	1.04	17.9	1.05	17.3														
1-1/2	1050	4593		4287		3960		3629		3231		2766													
		1.06	21	1.14	19.1	1.21	18.6	1.28	19.3	1.32	20	1.33	19.4												
	1110	4916		4640		4329		4024		3692		3291		2836											
		1.23	24	1.31	21	1.39	20	1.47	20	1.53	21	1.57	21	1.57	21										
2	1150	5129		4870		4574		4278		3974		3617		3204		2695									
		1.35	25	1.44	23	1.52	21	1.60	21	1.68	23	1.73	23	1.75	22	1.72	22								
	1220	5498		5263		4995		4711		4435		4139		3792		3401		2941							
		1.58	28	1.69	26	1.78	24	1.86	23	1.95	23	2.02	25	2.07	25	2.09	25	2.07	25						
3	1300	5915		5701		5463		5200		4936		4676		4395		4069		3706		3310		2629			
		1.88	32	2.00	30	2.10	28	2.19	26	2.28	25	2.37	26	2.45	27	2.51	28	2.53	27	2.53	27	2.39	26		
	1395	6405		6210		6001		5768		5520		5275		5032		4775		4482		4155		3806		3401	
		2.29	36	2.42	35	2.53	32	2.64	30	2.73	29	2.83	28	2.93	29	3.01	30	3.08	31	3.12	31	3.13	30	3.10	30

MAXIMUM MOTOR FRAME SIZE: 182T

NOTES:
1. Performance certified is for Installation Type A: Free inlet, free outlet.
2. Power rating (BHP) does not include belt drive losses.
3. Performance ratings do not include the effects of appurtenances in the airstream.
4. The sound ratings shown are loudness values in fan sones at 5 ft. (1.5 m) in a hemispherical free field calculated per AMCA Standard 301.
5. Values shown are for installation Type A: Free inlet fan hemispherical sone levels.

240D BCRD/BCRD-E

Outlet Area = 5.60 ft² **Fan Efficiency Grade: FEG60**

HP	RPM	STATIC PRESSURE (INCHES W.G.)											
		0	0.125	0.25	0.375	0.50	0.625	0.75	0.875	1.00	1.25	1.50	1.75
		CFM BHP Sone	CFM BHP Sone	CFM BHP Sone	CFM BHP Sone	CFM BHP Sone	CFM BHP Sone	CFM BHP Sone	CFM BHP Sone	CFM BHP Sone	CFM BHP Sone	CFM BHP Sone	CFM BHP Sone
1/4	410	4128 0.16 6.0	3525 0.20 5.4	2834 0.22 5.8	1981 0.21 4.7								
	435	4380 0.20 6.6	3809 0.24 6.1	3180 0.26 6.2	2487 0.26 5.4								
1/3	460	4631 0.23 7.4	4089 0.28 6.9	3525 0.30 6.7	2886 0.31 6.7	1850 0.28 5.8							
	480	4833 0.26 7.9	4312 0.31 7.5	3789 0.34 7.1	3168 0.35 7.5	2444 0.35 6.3							
1/2	530	5336 0.35 9.3	4864 0.41 9.1	4405 0.44 8.5	3856 0.47 8.8	3315 0.47 8.8	2575 0.46 7.7						
	550	5537 0.40 9.9	5082 0.45 9.7	4640 0.49 8.9	4134 0.52 9.3	3600 0.53 9.5	3002 0.53 8.2						
3/4	580	5839 0.46 10.9	5407 0.52 10.8	4987 0.57 10.0	4538 0.60 10.0	4010 0.61 10.6	3516 0.62 10.3	2806 0.60 9.2					
	625	6292 0.58 12.5	5891 0.65 12.5	5497 0.70 12.0	5106 0.73 11.6	4634 0.76 12.0	4164 0.77 12.5	3683 0.78 11.5	2992 0.75 10.8				
1	650	6544 0.65 13.3	6158 0.72 13.3	5777 0.78 12.8	5406 0.82 12.5	4977 0.85 12.6	4505 0.87 13.4	4073 0.87 13.1	3538 0.87 11.6				
	690	6947 0.78 14.9	6583 0.86 14.9	6222 0.92 14.4	5874 0.96 14.0	5502 1.00 13.9	5059 1.02 14.7	4634 1.04 14.9	4218 1.05 14.5	3688 1.04 13.0			
1-1/2	750	7551 1.01 16.8	7216 1.09 16.8	6883 1.16 16.5	6558 1.21 16.0	6236 1.26 15.8	5875 1.29 15.9	5460 1.32 16.6	5070 1.33 16.8	4695 1.34 16.6	3654 1.31 14.7		
	790	7954 1.17 18.1	7636 1.26 18.1	7320 1.34 17.6	7008 1.40 17.2	6704 1.45 16.9	6384 1.49 16.8	6013 1.53 17.3	5618 1.55 17.8	5259 1.56 18.3	4467 1.57 16.3		
2	840	8457 1.41 19.8	8158 1.50 19.8	7860 1.59 19.6	7565 1.66 19.1	7278 1.72 18.7	6989 1.77 18.6	6674 1.81 18.6	6313 1.84 18.8	5943 1.86 19.7	5271 1.89 19.7	4415 1.87 17.1	
	870	8759 1.57 21	8470 1.67 21	8183 1.75 21	7897 1.83 19.8	7618 1.89 19.5	7342 1.94 19.2	7051 1.99 19.2	6721 2.03 19.7	6360 2.06 20	5697 2.09 21	4974 2.09 18.9	3809 1.97 18.0

MAXIMUM MOTOR FRAME SIZE: 145T

240DHP BCRD/BCRD-E

Outlet Area = 5.60 ft² **Fan Efficiency Grade: FEG67**

HP	RPM	STATIC PRESSURE (INCHES W.G.)											
		0.50	0.625	0.75	0.875	1.00	1.25	1.50	1.75	2.00	2.25	2.50	2.75
		CFM BHP Sone	CFM BHP Sone	CFM BHP Sone	CFM BHP Sone	CFM BHP Sone	CFM BHP Sone	CFM BHP Sone	CFM BHP Sone	CFM BHP Sone	CFM BHP Sone	CFM BHP Sone	CFM BHP Sone
1/2	600	3080 0.41 8.5	2656 0.43 8.7	2117 0.43 8.5									
	640	3471 0.47 9.1	3120 0.50 9.8	2692 0.52 9.5	2149 0.52 9.6								
3/4	670	3750 0.53 9.7	3435 0.57 10.3	3064 0.59 10.5	2621 0.60 10.3								
	725	4238 0.64 11.2	3970 0.68 11.2	3671 0.72 11.7	3325 0.75 11.8	2922 0.76 11.5							
1	750	4451 0.70 11.9	4201 0.74 11.6	3924 0.78 12.2	3611 0.82 12.5	3248 0.84 12.6							
	805	4909 0.83 13.4	4690 0.88 12.9	4450 0.93 13.0	4187 0.97 13.8	3896 1.01 14.1	3191 1.04 13.6						
1-1/2	860	5357 0.98 15.2	5157 1.04 14.6	4947 1.09 14.4	4718 1.14 14.5	4471 1.19 15.2	3896 1.25 15.6	3178 1.27 14.9					
	925	5878 1.18 17.1	5693 1.24 16.5	5506 1.30 16.2	5309 1.36 15.9	5096 1.41 15.9	4625 1.51 17.0	4059 1.57 17.0	3371 1.57 16.6				
2	950	6076 1.27 18.0	5896 1.33 17.4	5715 1.39 16.7	5528 1.45 16.7	5326 1.51 16.6	4883 1.61 17.7	4362 1.68 18.1	3741 1.71 17.4				
	1015	6589 1.51 19.9	6419 1.58 19.2	6251 1.64 18.7	6081 1.71 18.1	5904 1.77 18.0	5518 1.89 18.4	5084 1.99 19.5	4579 2.06 19.7	3991 2.09 18.9	3238 2.04 18.9		
3	1100	7250 1.88 23	7093 1.95 22	6936 2.01 21	6781 2.08 21	6625 2.16 21	6295 2.30 20	5931 2.42 21	5530 2.53 22	5072 2.61 22	4551 2.65 21	3940 2.64 21	
	1165	7750 2.21 25	7602 2.27 24	7454 2.34 24	7307 2.41 24	7160 2.49 23	6861 2.64 23	6537 2.78 23	6184 2.91 23	5797 3.02 24	5360 3.10 24	4869 3.15 23	4311 3.15 24

MAXIMUM MOTOR FRAME SIZE: 182T

NOTES:
1. Performance certified is for Installation Type A: Free inlet, free outlet.
2. Power rating (BHP) does not include transmission losses.
3. Performance ratings do not include the effects of appurtenances (accessories).
4. The sound ratings shown are loudness values in fan sones at 5 ft. (1.5 m) in a hemispherical free field calculated per AMCA Standard 301.
5. Values shown are for installation Type A: Free inlet fan hemispherical sone levels.

300D BCRD

Outlet Area = 7.88 ft² **Fan Efficiency Grade: FEG67**

HP	RPM	STATIC PRESSURE (INCHES W.G.)											
		0	0.125	0.25	0.50	0.75	1.00	1.25	1.50	1.75	2.00	2.25	2.50
		CFM BHP Sone	CFM BHP Sone	CFM BHP Sone	CFM BHP Sone	CFM BHP Sone	CFM BHP Sone	CFM BHP Sone	CFM BHP Sone	CFM BHP Sone	CFM BHP Sone	CFM BHP Sone	CFM BHP Sone
1/4	330	5000 0.14 4.0	4086 0.17 5.4	3166 0.20 5.7									
	360	5454 0.18 4.6	4579 0.22 6.1	3880 0.26 6.7									
1/3	380	5757 0.22 5.3	4902 0.25 6.5	4264 0.29 7.3									
	405	6136 0.26 5.9	5303 0.30 7.1	4714 0.34 8									
1/2	430	6514 0.31 6.5	5702 0.35 7.7	5151 0.40 8.8	3222 0.43 8.6								
	450	6818 0.36 7	6021 0.40 8.3	5497 0.45 9.4	3978 0.52 9.6								
3/4	470	7120 0.41 7.7	6339 0.45 8.8	5834 0.50 10.0	4571 0.59 10.3								
	520	7878 0.55 9.1	7138 0.60 10	6652 0.65 11.5	5702 0.77 12.8	3467 0.71 10.8							
1	530	8030 0.59 9.4	7298 0.63 10.1	6814 0.68 11.9	5892 0.80 13.1	4107 0.81 12.5							
	565	8560 0.71 10.5	7855 0.75 10.9	7375 0.81 12.4	6529 0.94 14.1	5292 1.03 14.1							
1-1/2	600	9090 0.85 11.6	8412 0.90 12	7934 0.96 13.2	7144 1.09 14.9	6215 1.21 15.2	3958 1.09 13.1						
	650	9848 1.08 13.4	9203 1.13 13.4	8731 1.19 14.4	8004 1.33 15.9	7233 1.48 17.4	6039 1.56 15.9						
2	670	10150 1.18 14.3	9519 1.23 14.3	9050 1.30 15.1	8338 1.44 16.4	7602 1.59 17.8	6609 1.71 17.4	4338 1.50 14.8					
	715	10832 1.44 16.2	10228 1.49 16.2	9769 1.56 16.1	9077 1.71 17.2	8403 1.86 19.1	7659 2.02 19.5	6398 2.08 17.5					
3	750	11362 1.66 17.2	10779 1.71 17.2	10328 1.78 17.2	9643 1.94 17.8	9013 2.10 19.4	8342 2.27 21	7414 2.39 19.3	5829 2.30 18.4				
	820	12423 2.17 20	11876 2.23 20	11443 2.30 19.7	10766 2.46 19.1	10203 2.64 19.9	9604 2.82 22	8973 3.00 22	8079 3.13 20	6697 3.06 19.5			
5	850	12878 2.41 21	12345 2.47 21	11919 2.55 21	11244 2.72 20	10697 2.90 21	10129 3.09 22	9540 3.28 24	8823 3.44 23	7693 3.49 20	5744 3.13 20		
	970	14696 3.59 26	14215 3.65 26	13817 3.73 26	13157 3.91 25	12637 4.12 25	12164 4.33 25	11666 4.54 27	11155 4.76 29	10613 4.97 29	9918 5.14 28	8909 5.20 25.0	7602 4.99 25.0

MAXIMUM MOTOR FRAME SIZE: 184T

300DHP BCRD

Outlet Area = 7.88 ft² **Fan Efficiency Grade: FEG71**

HP	RPM	STATIC PRESSURE (INCHES W.G.)											
		0.50	0.75	1.00	1.25	1.50	1.75	2.00	2.25	2.50	2.75	3.00	3.25
		CFM BHP Sone	CFM BHP Sone	CFM BHP Sone	CFM BHP Sone	CFM BHP Sone	CFM BHP Sone	CFM BHP Sone	CFM BHP Sone	CFM BHP Sone	CFM BHP Sone	CFM BHP Sone	CFM BHP Sone
1/2	500	3881 0.47 8.9											
	515	4121 0.51 9.5	2721 0.52 9.6										
3/4	550	4645 0.60 10.7	3617 0.66 10.5										
	580	5066 0.69 11.4	4201 0.76 10.9										
1	610	5469 0.78 11.9	4715 0.86 11.5	3587 0.88 12.0									
	640	5860 0.88 12.5	5190 0.97 13.1	4279 1.03 12.8									
1-1/2	700	6617 1.10 14.2	6061 1.22 15.4	5372 1.31 14.2	4450 1.35 14.5								
	735	7048 1.25 15.6	6537 1.37 15.8	5931 1.48 16.3	5168 1.56 15.6	4054 1.52 15.9							
2	750	7230 1.31 16.0	6737 1.44 16.4	6160 1.56 16.9	5445 1.64 15.8	4469 1.65 16.5							
	810	7950 1.60 17.6	7512 1.75 17.7	7023 1.88 18.8	6448 2.00 18.3	5753 2.08 17.7	4824 2.07 18.2						
3	900	9007 2.10 21	8629 2.29 20	8222 2.45 20	7774 2.59 22	7261 2.72 21	6666 2.82 20	5946 2.88 21	4959 2.79 21				
	925	9297 2.25 23	8933 2.46 22	8543 2.63 21	8118 2.77 23	7640 2.91 23	7090 3.02 21	6448 3.11 21	5636 3.10 22	4430 2.90 21			
5	1000	10160 2.77 25	9831 3.00 25	9483 3.20 25	9112 3.37 25	8711 3.52 26	8266 3.67 27	7763 3.80 24	7193 3.90 24	6515 3.94 24	5629 3.85 25		
	1100	11297 3.57 29	11005 3.83 30	10699 4.07 29	10379 4.29 29	10041 4.48 29	9680 4.65 31	9289 4.81 31	8858 4.97 30	8381 5.10 27	7850 5.20 28	7234 5.25 28	6474 5.18 29

MAXIMUM MOTOR FRAME SIZE: 184T

NOTES:
1. Performance certified is for Installation Type A: Free inlet, free outlet.
2. Power rating (BHP) does not include transmission losses.
3. Performance ratings do not include the effects of appurtenances (accessories).
4. The sound ratings shown are loudness values in fan sones at 5 ft. (1.5 m) in a hemispherical free field calculated per AMCA Standard 301.
5. Values shown are for installation Type A: Free inlet fan hemispherical sone levels.

360D BCRD

Outlet Area = 10.50 ft² **Fan Efficiency Grade: FEG60**

HP	RPM	STATIC PRESSURE (INCHES W.G.)											
		0	0.125	0.25	0.375	0.50	0.625	0.75	0.875	1.00	1.25	1.50	1.75
		CFM BHP Sone	CFM BHP Sone	CFM BHP Sone	CFM BHP Sone	CFM BHP Sone	CFM BHP Sone	CFM BHP Sone	CFM BHP Sone	CFM BHP Sone	CFM BHP Sone	CFM BHP Sone	CFM BHP Sone
1/3	250	7390 0.21 5.4	5833 0.25 4.1	2981 0.22 3.7									
	280	8277 0.29 6.9	6936 0.34 5.5	4828 0.35 5.2									
1/2	300	8868 0.36 7.8	7627 0.42 6.5	5885 0.44 6.2									
	320	9459 0.43 9.0	8302 0.50 7.7	6836 0.53 6.9	4624 0.49 6.6								
3/4	340	10050 0.52 9.9	8966 0.59 9.0	7703 0.63 7.6	5758 0.62 7.6								
	365	10789 0.64 11.2	9786 0.72 10.4	8688 0.77 8.9	7084 0.78 8.9	5047 0.72 8.3							
1	380	11233 0.72 12.2	10272 0.81 11.3	9239 0.86 9.6	7824 0.89 9.5	5964 0.85 9.2							
	400	11824 0.84 13.1	10915 0.93 12.9	9949 1.00 10.9	8733 1.03 10.2	7041 1.01 10.6	5076 0.91 10.0						
1-1/2	420	12415 0.97 14.7	11552 1.07 14.1	10640 1.14 12.1	9582 1.19 11.2	8103 1.19 11.6	6389 1.13 10.8						
	460	13598 1.28 17.0	12814 1.39 17.0	11989 1.48 15.0	11120 1.53 13.7	10001 1.57 13.4	8555 1.56 13.8	6994 1.49 13.1					
2	480	14189 1.46 18.1	13439 1.57 18.1	12652 1.66 16.6	11837 1.73 15.3	10859 1.77 14.6	9590 1.79 15.1	8098 1.74 14.3	6484 1.62 14.0				
	505	14928 1.69 19.7	14217 1.82 19.7	13474 1.92 18.6	12709 1.99 17.2	11860 2.05 16.2	10764 2.08 16.4	9430 2.06 16.3	8018 1.99 15.2	6349 1.82 15.1			
3	550	16258 2.19 22	15608 2.32 22	14933 2.44 22	14236 2.53 20	13518 2.60 19.4	12686 2.66 18.9	11646 2.69 19.4	10426 2.67 20	9124 2.60 18.5			
	575	16997 2.50 25	16376 2.64 25	15733 2.77 24	15070 2.87 23	14395 2.95 22	13657 3.01 21	12756 3.06 21	11692 3.08 21	10454 3.03 21	7837 2.79 19.6		
5	650	19214 3.61 31	18667 3.78 31	18105 3.92 31	17527 4.05 29	16937 4.16 29	16340 4.25 28	15706 4.32 28	14979 4.39 27	14119 4.43 28	12069 4.39 28	9860 4.19 24	
	685	20249 4.23 34	19730 4.40 34	19199 4.56 34	18654 4.70 34	18097 4.83 32	17536 4.93 32	16958 5.01 31	16334 5.08 31	15613 5.15 31	13865 5.20 31	11781 5.07 30	9583 4.76 27

MAXIMUM MOTOR FRAME SIZE: 184T

360DHP BCRD

Outlet Area = 10.50 ft² **Fan Efficiency Grade: FEG67**

HP	RPM	STATIC PRESSURE (INCHES W.G.)											
		0.50	0.75	1.00	1.25	1.50	1.75	2.00	2.25	2.50	2.75	3.00	3.25
		CFM BHP Sone	CFM BHP Sone	CFM BHP Sone	CFM BHP Sone	CFM BHP Sone	CFM BHP Sone	CFM BHP Sone	CFM BHP Sone	CFM BHP Sone	CFM BHP Sone	CFM BHP Sone	CFM BHP Sone
1	430	6426 0.83 9.3	4046 0.82 7.9										
	460	7282 0.99 10.0	5562 1.05 8.8										
1-1/2	500	8354 1.21 11.4	7039 1.34 11.7	4872 1.30 10.4									
	525	9001 1.35 12.3	7821 1.52 13.1	6151 1.56 11.2									
2	550	9631 1.51 13.8	8545 1.71 13.9	7169 1.79 13.2	4906 1.67 12.0								
	580	10368 1.72 15.6	9372 1.95 14.9	8214 2.08 15.7	6549 2.09 13.4								
3	650	12024 2.27 21	11202 2.55 19.1	10283 2.78 19.1	9234 2.93 19.6	7842 2.96 16.9	5754 2.74 16.5						
	660	12255 2.36 22	11455 2.65 20	10558 2.89 19.1	9553 3.05 20	8254 3.10 17.8	6364 2.98 17.2						
5	750	14293 3.27 28	13648 3.60 26	12921 3.92 24	12132 4.20 23	11284 4.41 25	10289 4.53 24	9032 4.55 21	7308 4.38 21				
	785	15072 3.69 30	14469 4.03 27	13799 4.37 26	13063 4.69 24	12287 4.94 25	11431 5.12 26	10404 5.21 24	9111 5.20 22	7383 4.96 22			
7-1/2	860	16721 4.70 33	16189 5.07 31	15616 5.44 29	14988 5.82 28	14312 6.17 27	13607 6.45 27	12851 6.66 29	11991 6.81 28	10969 6.86 27	9701 6.83 26	8092 6.52 25	
	900	17592 5.31 36	17090 5.71 34	16557 6.09 32	15978 6.49 31	15351 6.87 30	14693 7.21 29	14007 7.47 30	13265 7.68 31	12420 7.82 31	11427 7.86 28	10217 7.83 27	8705 7.55 27

MAXIMUM MOTOR FRAME SIZE: 213T

NOTES:
1. Performance certified is for Installation Type A: Free inlet, free outlet.
2. Power rating (BHP) does not include transmission losses.
3. Performance ratings do not include the effects of appurtenances (accessories).
4. The sound ratings shown are loudness values in fan sones at 5 ft. (1.5 m) in a hemispherical free field calculated per AMCA Standard 301.
5. Type A: Free inlet fan hemispherical sone levels.

420D BCRD

Outlet Area = 11.40 ft² **Fan Efficiency Grade: FEG63**

HP	RPM	STATIC PRESSURE (INCHES W.G.)																							
		0		0.125		0.25		0.375		0.50		0.625		0.75		1.00		1.25		1.50		1.75		2.00	
		CFM		CFM		CFM		CFM		CFM		CFM		CFM		CFM		CFM		CFM		CFM		CFM	
		BHP	Sone	BHP	Sone	BHP	Sone	BHP	Sone	BHP	Sone	BHP	Sone	BHP	Sone	BHP	Sone	BHP	Sone	BHP	Sone	BHP	Sone	BHP	Sone
1/2	230	9414		7930		5813																			
		0.31	5.3	0.37	4.3	0.40	4.4																		
	250	10232		8872		7303																			
		0.40	6.3	0.47	5.2	0.51	5.2																		
3/4	270	11051		9794		8433		5934																	
		0.50	7.3	0.58	6.3	0.63	5.9	0.63	5.2																
	285	11665		10476		9220		7415																	
		0.59	8.1	0.68	7.2	0.73	6.4	0.77	6.8																
1	300	12279		11152		9983		8553		5471															
		0.69	8.9	0.78	8.2	0.84	7.1	0.88	7.6	0.79	6.1														
	315	12893		11822		10721		9463		7218															
		0.80	9.9	0.89	9.4	0.96	7.8	1.01	8.3	1.01	7.4														
1-1/2	330	13507		12486		11440		10291		8641		5396													
		0.92	10.9	1.02	10.2	1.09	8.8	1.15	8.9	1.19	9.0	0.98	7.0												
	360	14734		13802		12846		11853		10712		8855													
		1.19	12.7	1.31	12.5	1.39	10.7	1.45	10.0	1.51	10.8	1.54	10.1												
2	370	15144		14237		13308		12355		11280		9751		7010											
		1.29	13.5	1.41	13.5	1.50	11.5	1.57	10.8	1.63	11.4	1.68	11.3	1.51	8.9										
	395	16167		15319		14450		13574		12621		11530		9759											
		1.57	15.2	1.70	15.2	1.81	13.4	1.88	12.2	1.95	12.2	2.01	13.0	2.04	12.2										
3	430	17599		16822		16028		15227		14403		13498		12464		8417									
		2.03	17.3	2.17	17.3	2.29	16.0	2.39	14.5	2.46	14.1	2.53	14.3	2.59	15.0	2.41	11.7								
	455	18623		17889		17141		16383		15621		14804		13918		11167									
		2.40	18.7	2.55	18.7	2.69	17.8	2.80	16.3	2.88	15.4	2.95	15.4	3.03	16.1	3.11	15.3								
5	500	20464		19797		19120		18433		17744		17045		16298		14606		11622							
		3.19	22	3.36	22	3.51	21	3.64	20	3.75	18.7	3.83	17.9	3.91	17.9	4.07	19.1	4.07	16.9						
	540	22102		21485		20860		20227		19588		18950		18297		16865		15089		11869					
		4.01	25	4.20	25	4.37	25	4.52	23	4.65	22	4.75	21	4.84	21	5.02	21	5.17	22	5.03	18.6				
7-1/2	580	23739		23165		22585		21998		21404		20810		20215		18955		17555		15664		12437			
		4.97	28	5.17	28	5.36	28	5.53	27	5.68	26	5.80	24	5.91	24	6.10	24	6.29	25	6.45	25	6.17	20		
	615	25171		24630		24084		23532		22975		22413		21854		20709		19455		18048		15960		12702	
		5.93	31	6.14	31	6.34	31	6.52	31	6.69	29	6.84	27	6.96	27	7.17	26	7.37	27	7.57	28	7.71	27	7.23	22

MAXIMUM MOTOR FRAME SIZE: 213T

480D BCRD

Outlet Area = 14.11 ft² **Fan Efficiency Grade: FEG63**

HP	RPM	STATIC PRESSURE (INCHES W.G.)																							
		0		0.125		0.25		0.375		0.50		0.625		0.75		0.875		1.00		1.25		1.50		1.75	
		CFM		CFM		CFM		CFM		CFM		CFM		CFM		CFM		CFM		CFM		CFM		CFM	
		BHP	Sone	BHP	Sone	BHP	Sone	BHP	Sone	BHP	Sone	BHP	Sone	BHP	Sone	BHP	Sone	BHP	Sone	BHP	Sone	BHP	Sone	BHP	Sone
1/2	190	10494		8604		4418																			
		0.30	4.8	0.37	4.0	0.32	3.0																		
	210	11599		9890		7393																			
		0.41	5.7	0.48	4.8	0.51	4.5																		
3/4	225	12427		10824		8907																			
		0.50	6.5	0.58	5.5	0.64	6.0																		
	240	13256		11745		10130		6645																	
		0.61	7.4	0.69	6.4	0.76	6.8	0.70	5.0																
1	250	13808		12355		10874		8149																	
		0.69	8.0	0.78	6.9	0.85	7.2	0.85	5.5																
	265	14636		13265		11921		9923																	
		0.82	8.7	0.91	7.8	1.00	7.7	1.04	7.6																
1-1/2	285	15741		14466		13228		11702		8899															
		1.02	10.1	1.12	9.4	1.21	8.5	1.28	9.1	1.24	7.0														
	300	16570		15358		14177		12864		10809		6905													
		1.18	11.2	1.30	10.6	1.39	9.4	1.48	10.1	1.50	9.1	1.24	7.5												
2	320	17674		16538		15419		14291		12753		10144													
		1.44	12.8	1.56	12.5	1.66	10.5	1.76	10.9	1.83	11.2	1.76	8.9												
	335	18503		17418		16341		15292		13984		12038		8684											
		1.65	13.7	1.77	13.7	1.89	11.8	1.99	11.4	2.08	12.3	2.09	11.2	1.84	9.5										
3	350	19331		18293		17257		16261		15120		13570		11035											
		1.88	14.4	2.01	14.4	2.13	12.6	2.24	12.4	2.34	13.3	2.40	13.2	2.30	10.3										
	380	20988		20031		19076		18147		17208		16057		14548		12193		8837							
		2.41	16.6	2.55	16.6	2.68	15.4	2.81	14.4	2.93	14.7	3.02	15.6	3.07	15.4	2.96	12.5	2.54	11.9						
5	420	23197		22332		21467		20607		19781		18915		17874		16582		14786							
		3.25	19.0	3.41	19.0	3.56	18.8	3.70	17.0	3.84	16.9	3.96	16.9	4.07	17.9	4.14	18.1	4.11	16.2						
	455	25131		24331		23533		22735		21957		21194		20377		19407		18246		14685					
		4.13	22	4.31	22	4.47	22	4.63	19.7	4.78	18.7	4.92	18.6	5.05	19.5	5.17	19.9	5.25	19.9	5.10	16.4				
7-1/2	500	27616		26889		26162		25435		24710		24011		23317		22585		21748		19643		16297		11145	
		5.48	24	5.68	24	5.86	24	6.04	24	6.21	22	6.37	22	6.53	21	6.67	22	6.80	23	6.99	23	6.79	18.8	5.67	18.5
	520	28721		28021		27322		26624		25926		25243		24579		23899		23161		21338		18766		14603	
		6.17	26	6.37	26	6.56	26	6.75	25	6.92	24	7.10	23	7.26	22	7.42	23	7.57	23	7.80	25	7.83	23	7.15	20

MAXIMUM MOTOR FRAME SIZE: 213T

NOTES:
1. Performance certified is for Installation Type A: Free inlet, free outlet.
2. Power rating (BHP) does not include transmission losses.
3. Performance ratings do not include the effects of appurtenances (accessories).
4. The sound ratings shown are loudness values in fan sones at 5 ft. (1.5 m) in a hemispherical free field calculated per AMCA Standard 301.
5. Values shown are for installation Type A: Free inlet fan hemispherical sone levels.

Model DCRD, Direct Drive

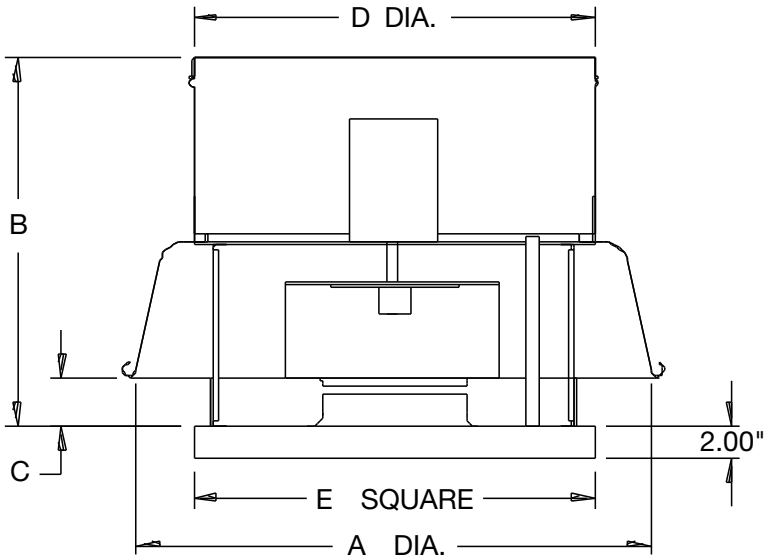

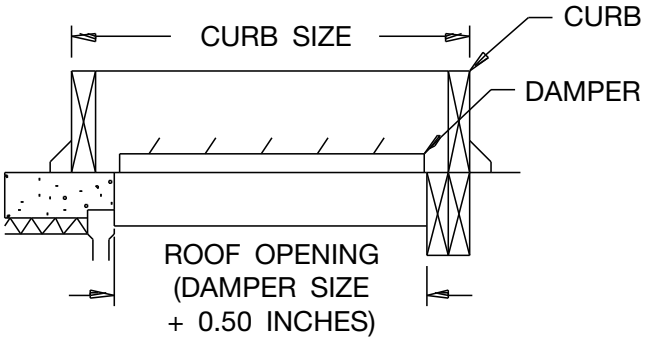

Notes:
1. All dimensions are in inches unless otherwise noted.
2. Dimensions are not to be used for construction.
3. Outside dimensions of dampers are nominal.
4. Outside dimensions of roof curb should be 1" to 1.50" less than inside curb cap dimension 'E', depending on thickness of flashing material used. If curb hinges are used, specify 1.50" difference.
5. Self-flashing roof curbs are 1" larger than canted curbs.

EC MOTOR SIZES	PSC MOTOR SIZES	FAN DIMENSIONS					CANTED CURB SIZE	DAMPER SIZE	AVG. SHIP WT. (LBS.)
		A	B	C	D	E			
060BE/070BE	060B/070B	18.50	15.63	2.06	15.12	17.00	15.5 x 15.5	10 x 10	30
080BE	080B	18.50	15.63	2.06	15.12	17.00	15.5 x 15.5	10 x 10	32
085BE/090BE/ 095BE	085B/090B/ 095B	21.00	19.31	2.63	15.12	17.00	15.5 x 15.5	10 x 10	43
100BE	100B	21.00	17.31	2.63	15.12	17.00	15.5 x 15.5	10 x 10	48
120BE	120B	27.50	22.38	3.63	22.00	20.00	18.5 x 18.5	14 x 14	50
130BE	130B	27.50	23.25	4.44	22.00	24.00	22.5 x 22.5	18 x 18	65
140BE	140B	27.50	23.50	4.69	22.00	24.00	22.5 x 22.5	18 x 18	67
150BE	150B	30.44	26.75	4.63	24.00	24.00	22.5 x 22.5	18 x 18	77
160BE	160B	30.44	27.25	5.19	24.00	24.00	22.5 x 22.5	18 x 18	82
170BE	170B	38.38	29.25	4.06	30.00	30.00	28.5 x 28.5	24 x 24	95
180BE	180B	38.38	30.25	5.06	30.00	30.00	28.5 x 28.5	24 x 24	100

D-4051F

DIMENSIONS NOT TO BE USED FOR CONSTRUCTION. CERTIFIED DRAWINGS AVAILABLE UPON REQUEST.

Model BCRD, Belt Driven

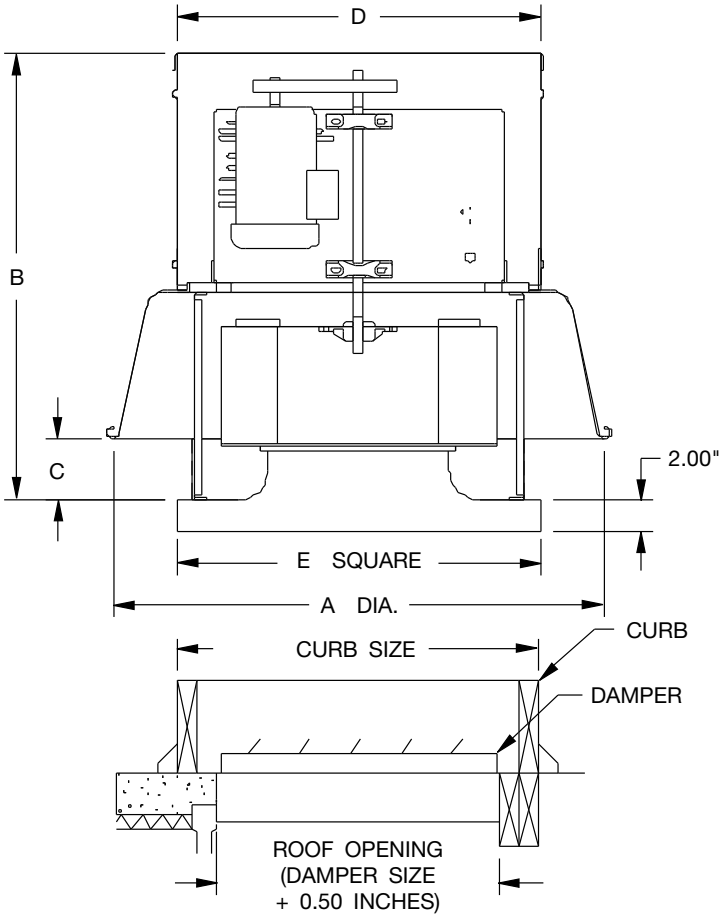

Notes:
1. All dimensions are in inches unless otherwise noted.
2. Dimensions are not to be used for construction.
3. Outside dimensions of dampers are nominal.
4. Outside dimensions of roof curb should be 1" to 1.50" less than inside curb cap dimension 'E', depending on thickness of flashing material used. If curb hinges are used, specify 1.50" difference.
5. Self-flashing roof curbs are 1" larger than canted curbs.

SIZE	FAN DIMENSIONS					CANTED CURB SIZE	DAMPER SIZE	AVG. SHIP WT. (LBS.)
	A	B	C	D	E			
070D/075D	25.88	22.13	2.06	22.00	17.00	15.5 x 15.5	10 x 10	58
085D	27.50	23.94	2.38	22.00	17.00	15.5 x 15.5	10 x 10	67
100D/100DHP	27.50	23.94	2.38	22.00	20.00	18.5 x 18.5	14 x 14	74
120D	30.44	28.13	2.56	24.00	20.00	18.5 x 18.5	14 x 14	78
140D	30.44	28.25	2.81	24.00	24.00	22.5 x 22.5	18 x 18	93
140DHP	30.44	28.25	2.81	24.00	24.00	22.5 x 22.5	18 x 18	88
160D/160DHP	32.63	29.00	3.38	24.00	26.00	24.5 x 24.5	20 x 20	107
180D/180DHP	38.38	33.88	3.75	30.00	30.00	28.5 x 28.5	24 x 24	130
210D/210DHP	38.38	34.06	4.00	30.00	30.00	28.5 x 28.5	24 x 24	160
240D/240DHP	43.13	35.88	4.88	30.00	34.00	32.5 x 32.5	28 x 28	220
300D/300DHP	51.38	38.88	4.88	42.00	40.00	38.5 x 38.5	34 x 34	270
360D/360DHP	60.75	44.38	6.88	50.00	46.00	44.5 x 44.5	40 x 40	360
420D	65.81	47.81	7.00	50.00	52.00	50.5 x 50.5	46 x 46	420
480D	74.06	50.25	7.75	58.00	58.00	56.5 x 56.5	50 x 50	475

D-4105G

DIMENSIONS NOT TO BE USED FOR CONSTRUCTION. CERTIFIED DRAWINGS AVAILABLE UPON REQUEST.

Model BCRD-E, Belt Driven, Endurex™ Housing

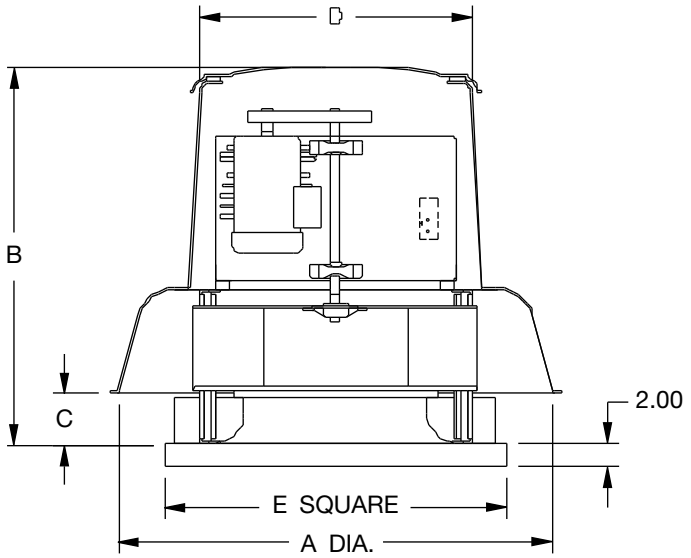

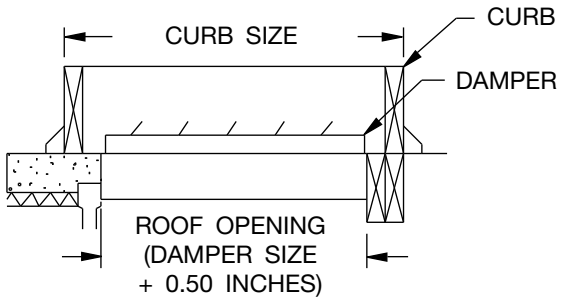

Notes:
1. All dimensions are in inches unless otherwise noted.
2. Dimensions are not to be used for construction.
3. Outside dimensions of dampers are nominal.
4. Outside dimensions of roof curb should be 1" to 1.50" less than inside curb cap dimension 'E', depending on thickness of flashing material used. If curb hinges are used, specify 1.50" difference.
5. Self-flashing roof curbs are 1" larger than canted curbs.

SIZE	FAN DIMENSIONS					CANTED CURB SIZE	DAMPER SIZE	AVG. SHIP WT. (LBS.)
	A	B	C	D	E			
070D/ 075D	25.87	21.75	2.03	20.68	17.00	15.5 x 15.5	10 x 10	58
085D	27.88	26.25	2.41	22.44	17.00	15.5 x 15.5	10 x 10	67
100D	27.88	26.25	2.41	22.44	20.00	18.5 x 18.5	14 x 14	74
120D	30.96	29.19	2.56	22.44	20.00	18.5 x 18.5	14 x 14	78
140D	30.96	29.44	2.81	22.44	24.00	22.5 x 22.5	18 x 18	93
160D	33.81	33.25	3.36	24.50	26.00	24.5 x 24.5	20 x 20	107
180D	39.54	36.06	3.75	27.25	30.00	28.5 x 28.5	24 x 24	130
210D	39.54	36.31	4.00	27.25	30.00	28.5 x 28.5	24 x 24	160
240D	43.00	37.44	4.83	27.25	34.00	32.5 x 32.5	28 x 28	220

D-4106B

DIMENSIONS NOT TO BE USED FOR CONSTRUCTION. CERTIFIED DRAWINGS AVAILABLE UPON REQUEST.

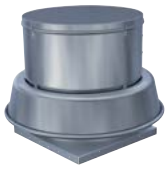

Model

DCRD

Roof exhaust fans shall be of the direct drive centrifugal type, Model DCRD, as manufactured by Twin City Fan & Blower, Minneapolis, Minnesota.

PERFORMANCE — Fans shall be tested in accordance with AMCA 210 and AMCA 300 test codes for air moving devices and shall be guaranteed by the manufacturer to deliver rated published performance levels. Fans shall be licensed to bear the AMCA certified ratings seal for both sound and air. Models shall be cULus 705 listed.

CONSTRUCTION — Model DCRD fan housings shall be constructed of aluminum for durability and appearance. Fan spinnings shall have a rolled bead edge for rigidity. Units shall have a deep venturi inlet to prevent snow and rain entry into the building. The curb cap shall include prepunched mounting holes for ease of installation. A conduit chase constructed of electrical metallic tubing shall be provided to the motor compartment. The curb base shall provide protection from weather. Fans shall bear a permanently attached nameplate displaying model and serial number of the unit for future identification.

MOTOR ASSEMBLY — Motor assembly shall be mounted on vibration isolators to eliminate vibration and noise transmission into the ductwork. Motors shall be mounted out of the exhaust airstream.

WHEEL — Fan wheels shall be of the centrifugal backward inclined type, containing a matching inlet venturi for optimum unit performance. Wheels shall be statically and dynamically balanced.

MOTOR — Motors shall be heavy-duty ball bearing type, closely matched to the fan load. All single-phase ODP motors shall contain thermal overload protection. All motors shall be UL and /or CSA recognized. Motors for use with speed control shall provide good speed controllability without any objectionable noise.

DISCONNECT SWITCH — A NEMA 1 disconnect switch shall be supplied with wiring leading from the motor to the junction box (ODP and TEFC motors).

ACCESSORIES — When specified, accessories such as backdraft damper, roof curb, curb hinge, retaining chain, security hasp, variable speed controller, NEMA 3R or NEMA 4 disconnect switches, firestat, aluminum bird screen, aluminum insect screen and special coatings shall be provided by Twin City Fan & Blower to maintain one source responsibility.

FACTORY RUN TEST — All fans prior to shipment shall be completely assembled and test run as a unit at operating speed or maximum RPM allowed for the particular construction type. Each wheel shall be statically and dynamically balanced in accordance with ANSI/AMCA 204-96 "Balance Quality and Vibration Levels for Fans" to Fan Application Category BV-3, Balance Quality Grade G6.3. Balance readings shall be taken by electronic type equipment in the axial, vertical, and horizontal directions on each of the bearings. Records shall be maintained and a written copy shall be available upon request.

GUARANTEE — The manufacturer shall guarantee the workmanship and materials for its roof and wall mounted centrifugal exhaust fans for at least one (1) year from startup or eighteen (18) months from shipment, whichever occurs first.

TCF
TWIN CITY FAN

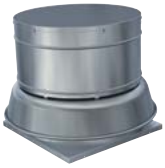

Model

BCRD

Roof mounted exhaust fans shall be of the belt driven centrifugal type, Model BCRD (Spun Aluminum Housing) and as manufactured by Twin City Fan & Blower, Minneapolis, Minnesota.

PERFORMANCE — Fans shall be tested in accordance with AMCA 210 and AMCA 300 test codes for air moving devices and shall be guaranteed by the manufacturer to deliver rated published performance levels. Fans shall be licensed to bear the AMCA certified ratings seal for both sound and air. Models shall be cULus 705 listed.

CONSTRUCTION — Model BCRD fan housings shall be constructed of spun aluminum and shall offer finish durability and aesthetic appearance. Fan spinnings shall have a rolled bead edge for rigidity. All units have a deep venturi inlet to prevent snow and rain entry into the building. The curb cap shall include prepunched mounting holes for ease of installation. A conduit chase constructed of electrical metallic tubing shall be provided to the motor compartment. The curb base shall provide protection from weather. Lifting lugs shall be provided inside the motor compartment for ease of handling and installation. Fans shall bear a permanently attached nameplate displaying model and serial number of the unit for future identification.

MOTOR AND DRIVE ASSEMBLY — Motor and drive assembly shall be mounted on vibration isolators to eliminate vibration and noise transmission into the ductwork. Motors and drives shall be mounted out of the exhaust airstream.

WHEEL — Fan wheels shall be of the centrifugal backward inclined type, containing a matching inlet venturi for optimum unit performance. Wheels shall be statically and dynamically balanced.

SHAFT — Fan shafts shall be precision-ground and polished. Shafts shall have a first critical speed of at least 125% of the fan's maximum operating speed.

BEARINGS — Bearings shall be of the one-piece, pillow block type with relubricable zerk fittings. Bearings shall be designed for air handling service with a minimum L-10 life in excess of 100,000 hours; L-50 500,000 hours at the maximum cataloged operating speed. Bearing mounting plate shall have self-aligning tabs for exact locating and alignment of bearings.

DRIVE — Drive assembly shall be constructed of heavy-gauge galvanized steel. Drives shall be sized for a minimum of 150% of driven horsepower. Machined, cast iron motor sheaves shall be adjustable for final system balance.

MOTOR — Motors shall be heavy-duty ball bearing type, closely matched to the fan load. All single-phase ODP motors shall contain thermal overload protection. All motors shall be UL and /or CSA recognized. Motor adjustment shall allow precise belt tensioning for optimum belt life and one-person adjustment and servicing.

DISCONNECT SWITCH — A NEMA 1 disconnect switch shall be supplied with wiring leading from the motor to the junction box (ODP and TEFC motors).

ACCESSORIES — When specified, accessories such as backdraft damper, roof curb, curb hinge, retaining chain, security hasp, NEMA 3R or NEMA 4 disconnect switches, 2-speed switch, firestat, aluminum bird screen, aluminum insect screen and special coatings shall be provided by Twin City Fan & Blower to maintain one source responsibility.

FACTORY RUN TEST — All fans prior to shipment shall be completely assembled and test run as a unit at operating speed or maximum RPM allowed for the particular construction type. Each wheel shall be statically and dynamically balanced in accordance with ANSI/AMCA 204-96 "Balance Quality and Vibration Levels for Fans" to Fan Application Category BV-3, Balance Quality Grade G6.3. Balance readings shall be taken by electronic type equipment in the axial, vertical, and horizontal directions on each of the bearings. Records shall be maintained and a written copy shall be available upon request.

GUARANTEE — The manufacturer shall guarantee the workmanship and materials for its roof and wall mounted centrifugal exhaust fans for at least one (1) year from startup or eighteen (18) months from shipment, whichever occurs first.

Model

BCRD-E

Roof mounted exhaust fans shall be of the belt driven centrifugal type, Model BCRD-E (Endurex™ Polymeric Housing), as manufactured by Twin City Fan & Blower, Minneapolis, Minnesota.

PERFORMANCE — Fans shall be tested in accordance with AMCA 210 and AMCA 300 test codes for air moving devices and shall be guaranteed by the manufacturer to deliver rated published performance levels. Fans shall be licensed to bear the AMCA certified ratings seal for both sound and air. Models shall be cULus 705 listed.

CONSTRUCTION — Model BCRD-E fan housings shall be constructed of Endurex™ for impact, weather, corrosion and UV resistance. All units have a deep venturi inlet to prevent snow and rain entry into the building. The curb cap shall include prepunched mounting holes for ease of installation. A conduit chase constructed of electrical metallic tubing shall be provided to the motor compartment. The curb base shall provide protection from weather. Lifting lugs shall be provided inside the motor compartment for ease of handling and installation. Fans shall bear a permanently attached nameplate displaying model and serial number of the unit for future identification.

MOTOR AND DRIVE ASSEMBLY — Motor and drive assembly shall be mounted on vibration isolators to eliminate vibration and noise transmission into the ductwork. Motors and drives shall be mounted out of the exhaust airstream.

WHEEL — Fan wheels shall be of the centrifugal backward inclined type, containing a matching inlet venturi for optimum unit performance. Wheels shall be statically and dynamically balanced.

SHAFT — Fan shafts shall be precision-ground and polished. Shafts shall have a first critical speed of at least 125% of the fan's maximum operating speed.

BEARINGS — Bearings shall be of the one-piece, pillow block type with relubricable zerk fittings. Bearings shall be designed for air handling service with a minimum L-10 life in excess of 100,000 hours; L-50 500,000 hours at the maximum cataloged operating speed. Bearing mounting plate shall have self-aligning tabs for exact locating and alignment of bearings.

DRIVE — Drive assembly shall be constructed of heavy-gauge galvanized steel. Drives shall be sized for a minimum of 150% of driven horsepower. Machined, cast iron motor sheaves shall be adjustable for final system balance.

MOTOR — Motors shall be heavy-duty ball bearing type, closely matched to the fan load. All single-phase ODP motors shall contain thermal overload protection. All motors shall be UL and /or CSA recognized. Motor adjustment shall allow precise belt tensioning for optimum belt life and one-person adjustment and servicing.

DISCONNECT SWITCH — A NEMA 1 disconnect switch shall be supplied with wiring leading from the motor to the junction box (ODP and TEFC motors).

ACCESSORIES — When specified, accessories such as backdraft damper, roof curb, curb hinge, retaining chain, security hasp, NEMA 3R or NEMA 4 disconnect switches, 2-speed switch, firestat, aluminum bird screen, aluminum insect screen and special coatings shall be provided by Twin City Fan & Blower to maintain one source responsibility.

FACTORY RUN TEST — All fans prior to shipment shall be completely assembled and test run as a unit at operating speed or maximum RPM allowed for the particular construction type. Each wheel shall be statically and dynamically balanced in accordance with ANSI/AMCA 204-96 "Balance Quality and Vibration Levels for Fans" to Fan Application Category BV-3, Balance Quality Grade G6.3. Balance readings shall be taken by electronic type equipment in the axial, vertical, and horizontal directions on each of the bearings. Records shall be maintained and a written copy shall be available upon request.

GUARANTEE — The manufacturer shall guarantee the workmanship and materials for its roof and wall mounted centrifugal exhaust fans for at least one (1) year from startup or eighteen (18) months from shipment, whichever occurs first. All Endurex™ housing components shall have a limited lifetime warranty.

INDUSTRIAL PROCESS AND COMMERCIAL VENTILATION SYSTEMS

CENTRIFUGAL FANS | UTILITY SETS | PLENUM & PLUG FANS | INLINE CENTRIFUGAL FANS

MIXED FLOW FANS | TUBEAXIAL & VANEAXIAL FANS | PROPELLER WALL FANS | PROPELLER ROOF VENTILATORS

CENTRIFUGAL ROOF & WALL EXHAUSTERS | CEILING VENTILATORS | GRAVITY VENTILATORS | DUCT BLOWERS

RADIAL BLADED FANS | RADIAL TIP FANS | HIGH EFFICIENCY INDUSTRIAL FANS | PRESSURE BLOWERS

LABORATORY EXHAUST FANS | FILTERED SUPPLY FANS | MANCOOLERS | FIBERGLASS FANS | CUSTOM FANS

TCF
TWIN CITY FAN

TWIN CITY FAN & BLOWER

WWW.TCF.COM

5959 TRENTON LANE N | MINNEAPOLIS, MN 55442 | PHONE: 763-551-7600 | FAX: 763-551-7601