BC 07

BETEC CAD.

Weather Louvers

WL-AB-40C

Selected Products of the company have been Classified / Listed / Tested by various international testing authorities.

Globally Recognized. Industry Respected.

Table Of Contents

S. No	Description	Page No
1	General Information	1
2	Weather Louvers - B10 Series	2-4
3	Weather Louvers - B-20 Series	5-10
4	Weather Louvers - B-30 Series	11-17
5	Weather Louvers - B-40 Series	18-21
6	Weather Louvers - B-50 Series	22-25

Selected Products of the company have been Classified / Listed / Tested by various international testing authorities.

Weather Louver - WL

Weather Louvers

BETEC CAD. manufactures weather louver, which are designed for both intake and exhaust air applications. These weather louvers have been designed to ensure that the basic parameters of minimum pressure loss, low self-generated aerodynamic noise, minimum water ingress and aesthetical appearance are satisfied.

WL-AB-31A

Standard Types and Models				
Item	**Series**	**Model**	**Specification**	**Construction**
WL	B - 10	1	Light Duty Louvers	Aluminium*
				Galvanized
				Stainless Steel
	B - 20	1 2	Non - Drainable Louvers Aerofoil Blade Louvers	Aluminium*
				Galvanized
				Stainless Steel
	BC - 30	1 2	Stationary Louvers (Heavy Duty) Wind Driven Rain Louvers	Aluminium*
	BC - 40	1	Wind Driven Rain Louvers	Aluminium*
MWL	B-50	1 2	Motorized Single Skin Blade - Louvers Motorized Aerofoil Blade - Louvers	Aluminium*
				Galvanized
				Stainless Steel

Material Details
All types and models of Weather Louvers are available in Galvanized Steel, Stainless Steel & Aluminium according to the design and application.

Sheet Metal Galvanized Steel (GI)
Zinc coating Z-22 to Z-27 as per **ASTM-A653** Standards.

Sheet Metal Aluminium (AL)
Aluminium Sheet as per Alloy **A1100** Standards.
Extruded aluminium as per Alloy **6063 A** Standards.

Sheet Metal Stainless Steel (SS)
Stainless steel **304 / 316L.**

Applications:

GI Construction : For **HVAC** commercial,Residential etc.
AL Construction: For Hospitals,Labs,Green Building etc.
SS Construction: For Offshore, Oil & Gas etc.

The respective alphabet indicates the type of material.
G - Galvanized steel **(GI)**
S - Stainless steel **(SS)**
A - Aluminum **(AL)**

Alphabet indicates the type of installation.
A - Wall Mouted.
B - Duct Mounted.
C - Flush Mounted.

***BETEC CAD's* Weather Louvers are manufactured as per international standards and confirmed to ADC 1062 ; GRD 84 and AMCA standards 500-83.**

Note: * Indicates ***BETEC CAD's* Standard** Construction.

Selected Products of the company have been Classified / Listed / Tested by various international testing authorities.

AMCA500-L Tested Weather Louver

B-10 Series

Light Duty Non-Drinable Louver

Model : WL-AB-11A/B/C

Type : A* - Wall Mounted; **B** - Duct Mounted; **C** - Flush Mounted

BETEC CAD. Manufactures Model WL AB 11 A/B/Cweather louver to suit various ventilation applications.

Weather louvers B-10 series is light duty model construction, suitable for the duct or wall mounting applications in **HVAC** systems, for air ventilation i.e, intake or exhaust these louvers are available with filters and dampers suitable for AHU's fresh air intake.

WL-AB-11A

BETEC CAD. Industries FZC. certifies that model **WL-AB-11A/B/C** Weather louver is licensed to bear the **AMCA** seal. The ratings shown are based on tests and procedures performed in accordance with the requirements of the **AMCA** Certified Ratings Program. The **AMCA** seal applies to air performance and water penetration for Weather louvers only.

Standard Construction

Frame
45 mm deep, 1mm thick extruded aluminum.

Blades
1.2 mm thick extruded aluminum.

Blade Orientation
Horizontal.

Blade Type
Fixed.

Blade Angle
45° Degree

Finish :
Mill finish

Optional Fittings

Screen
Galvanized Steel 0.4mm thick
S-3 SS Bird screen
S-10 SS Fly screen
Filter
13 / 25 mm thick aluminum filter
Damper
Control Damper
Finish
Available with RAL Powder coating, please specify color.

Optional Construction Details

Frame : Thickness up to 4 mm
Blade : Thickness up to 4 mm

Features

- Closely spaced horizontal blades minimize the penetration of wind-driven rain, reducing damage and additional operating expenses.
- Free Area - 41.8%
- Performance as per AMCA 500 - L
- Excellent pressure drop performance.
- Aluminum construction for low maintenance and high resistance to corrosion.

B10 Series Models details				
Material Construction				
Model	Frame		Blade	
	Material	Thick	Material	Thick
WL-AB-11A/B/C	AL	1 mm	AL	1.2 mm
WL-GB-11A/B/C	GI	0.9 mm	GI	1.2 mm
WL-SB-11A/B/C	SS	0.9 mm	SS	1.2 mm

Alphabet indicates the type of installation
A - Wall Mounted
B - Duct Mounted
C - Flush Mounted

Any Combination of W x H										
WL-AB-11A/B/C										
Width in Inches	4"	6"	10"	12"	16"	20"	30"	36"	48"	96"
Height in inches	4"	6"	10"	12"	16"	20"	30"	36"	48"	96"

Note:
Maximum single module construction - 1200 x 1200 mm
Multiple module available with mullion.

Note :
Please contact ***BETEC CAD***. for customized design & additional information.

Selected Products of the company have been Classified / Listed / Tested by various international testing authorities.

AMCA500-L Tested Weather Louver

B-10 Series

Constructional Details

Model : WL-AB-11A/B/C

A* - Wall Mounted; **B** - Duct Mounted; **C** - Flush Mounted

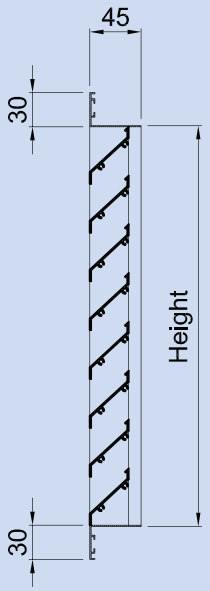

WL-AB-11A
Wall Mounted Type Frame

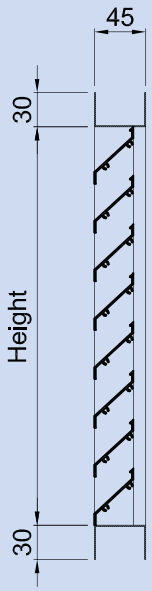

WL-AB-11B
Duct Mounted Type Frame

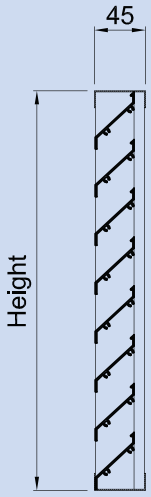

WL-AB-11C
Flush Mounted Type Frame

Installation Details

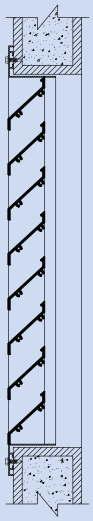

Wall Mouning Installation

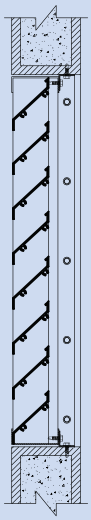

Flush Mounting Installation

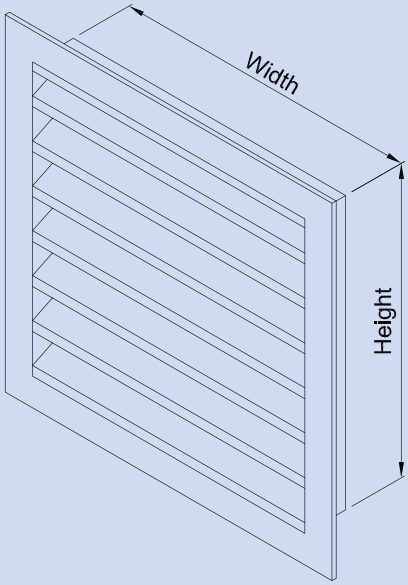

Isometric View

Selected Products of the company have been Classified / Listed / Tested by various international testing authorities.

AMCA500-L Tested Weather Louver

B-10 Series

Engineering and Performance Data

Louver Free Area **Model : WL-AB-11A/B/C**

Height \ Width	300	450	600	750	900	1050	1350	1500	1650	1800	1950	2100	2250	2400	2550	2700	2850	3000
300	0.02	0.04	0.06	0.08	0.09	0.11	0.15	0.16	0.18	0.20	0.22	0.23	0.25	0.27	0.29	0.30	0.32	0.34
450	0.04	0.07	0.10	0.13	0.16	0.18	0.24	0.27	0.30	0.33	0.36	0.39	0.41	0.44	0.47	0.50	0.53	0.56
600	0.06	0.10	0.14	0.18	0.22	0.26	0.34	0.38	0.42	0.46	0.50	0.54	0.58	0.62	0.66	0.70	0.74	0.78
750	0.07	0.13	0.18	0.23	0.28	0.33	0.43	0.49	0.54	0.59	0.64	0.69	0.74	0.79	0.85	0.90	0.95	1.00
900	0.09	0.15	0.22	0.28	0.34	0.40	0.53	0.59	0.66	0.72	0.78	0.84	0.91	0.97	1.03	1.10	1.16	1.22
1050	0.11	0.18	0.25	0.33	0.40	0.48	0.63	0.70	0.77	0.85	0.92	1.00	1.07	1.15	1.22	1.29	1.37	1.44
1350	0.14	0.24	0.33	0.43	0.53	0.62	0.82	0.91	1.01	1.11	1.21	1.30	1.40	1.50	1.59	1.69	1.79	1.88
1500	0.15	0.26	0.37	0.48	0.59	0.70	0.91	1.02	1.13	1.24	1.35	1.45	1.56	1.67	1.78	1.89	2.00	2.10
1650	0.17	0.29	0.41	0.53	0.65	0.77	1.01	1.13	1.25	1.37	1.49	1.61	1.73	1.85	1.97	2.09	2.21	2.33
1800	0.19	0.32	0.45	0.58	0.71	0.84	1.10	1.24	1.37	1.50	1.63	1.76	1.89	2.02	2.15	2.28	2.42	2.55
1950	0.21	0.35	0.50	0.64	0.79	0.93	1.22	1.37	1.51	1.66	1.81	1.95	2.10	2.24	2.39	2.53	2.68	2.82
2100	0.22	0.38	0.54	0.69	0.85	1.01	1.32	1.48	1.63	1.79	1.95	2.10	2.26	2.42	2.57	2.73	2.89	3.04
2250	0.24	0.41	0.58	0.74	0.91	1.08	1.42	1.58	1.75	1.92	2.09	2.26	2.42	2.59	2.76	2.93	3.10	3.26
2400	0.26	0.44	0.61	0.79	0.97	1.15	1.51	1.69	1.87	2.05	2.23	2.41	2.59	2.77	2.95	3.13	3.31	3.48
2550	0.27	0.46	0.65	0.84	1.04	1.23	1.61	1.80	1.99	2.18	2.37	2.56	2.75	2.94	3.13	3.32	3.51	3.71
2700	0.29	0.49	0.69	0.89	1.10	1.30	1.70	1.91	2.11	2.31	2.51	2.71	2.92	3.12	3.32	3.52	3.72	3.93
2850	0.30	0.52	0.73	0.95	1.16	1.37	1.80	2.01	2.23	2.44	2.65	2.87	3.08	3.29	3.51	3.72	3.93	4.15
3000	0.32	0.55	0.77	1.00	1.22	1.45	1.89	2.12	2.34	2.57	2.79	3.02	3.24	3.47	3.69	3.92	4.14	4.37

Water Penetration V/S Free Area Velocity Graph

Model : WL-AB-11A/B/C; Size : 48” x 48”

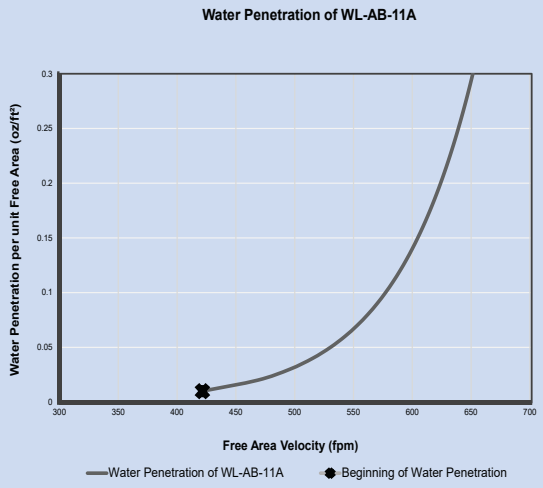

AMCA Standard 500-L Water Penetration Test (15 minutes test duration)
The beginning point of water penetration @ 425 fpm.

Water Penetration V/S Free Area Velocity Graph
Model : WL-AB-11A/B/C; Size : 48” x 48”

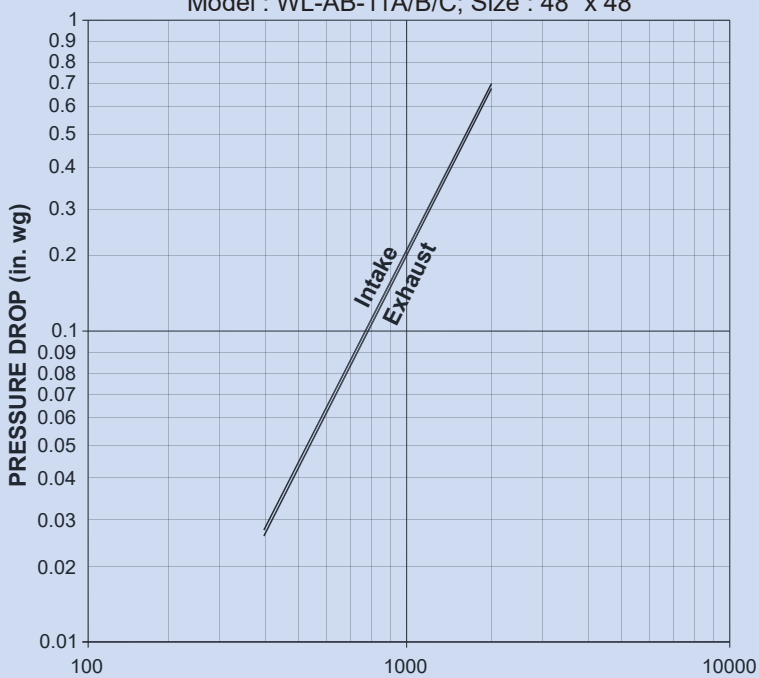

AMCA Standard 500-L Pressure Drop Test.
Data is corrected to standard air density.

BETEC CAD. Industries FZC. certifies that model **WL-AB-11A/B/C** Weather louver is licensed to bear the **AMCA** seal. The ratings shown are based on tests and procedures performed in accordance with the requirements of the **AMCA** Certified Ratings Program. The **AMCA** seal applies to air performance and water penetration for Weather louvers only.

Selected Products of the company have been Classified / Listed / Tested by various international testing authorities.

AMCA500-L Tested Weather Louver

B-20 Series

Heavy Duty Non-Drinable Louver

Model : WL-AB-21A/B/C

Type : A* - Wall Mounted; **B** - Duct Mounted; **C** - Flush Mounted

BETEC CAD. Manufactures Model WL AB 21A/B/C weather louver with and without damper combinations, which are designed for both intake and exhaust air applications. These louvers have been designed for minimum pressure loss and low self-generated aerodynamic noise.

WL-AB-21A

BETEC CAD. Industries FZC. certifies that model **WL-AB-21A/B/C** Weather louver is licensed to bear the **AMCA** seal. The ratings shown are based on tests and procedures performed in accordance with the requirements of the **AMCA** Certified Ratings Program. The **AMCA** seal applies to air performance and water penetration for Weather louvers only.

Standard Construction

Frame Material
70 mm deep 2mm thick extruded aluminum angle.

Blade Material
1.5 mm thick extruded aluminum.

Blade Orientation
Horizontal.

Blade Type
Fixed.

Blade Angle
45° Degree.

Finish
Mill finish.

Optional Fittings

Screen
Galvanized Steel 0.4mm thick
S-3 SS Bird screen
S-10 SS Fly screen

Filter
13 / 25 mm thick aluminum filter

Damper
Control Damper.

Finish
Available with RAL Powder coating, please specify color.

Optional Construction Details

Frame : Thickness up to 4 mm
Blade : Thickness up to 4 mm

Features

- Closely spaced horizontal blades minimize the penetration of wind-driven rain, reducing damage and additional operating expenses.
- Free Area 45.4%
- Performance as per AMCA 500 - L
- Excellent pressure drop performance.
- Aluminum construction for low maintenance and high resistance to corrosion.

B-20 Series Models details				
Material Construction				
Model	Frame		Blade	
	Material	Thick	Material	Thick
WL-AB-21A/B/C	AL	2 mm	AL	1.5 mm
WL-GB-21A/B/C	GI	1.5 mm	GI	1.2 mm
WL-SB-21A/B/C	SS	1.5 mm	SS	1.2 mm

Alphabet indicates the type of installation
A - Wall Mounted
B - Duct Mounted
C - Flush Mounted

Any Combination of W x H										
WL-AB-21A/B/C										
Width in Inches	4"	6"	10"	12"	16"	20"	30"	36"	48"	96"
Height in inches	4"	6"	10"	12"	16"	20"	30"	36"	48"	96"

Note:
Maximum single module construction - 2 x 1.5 meters.
Multiple module available with mullion.

Note :
Please contact ***BETEC CAD***. for customized design & additional information.

Selected Products of the company have been Classified / Listed / Tested by various international testing authorities.

AMCA500-L Tested Weather Louver

B-20 Series

Constructional Details

Model : WL-AB-21A/B/C

A* - Wall Mounted; **B** - Duct Mounted; **C** - Flush Mounted

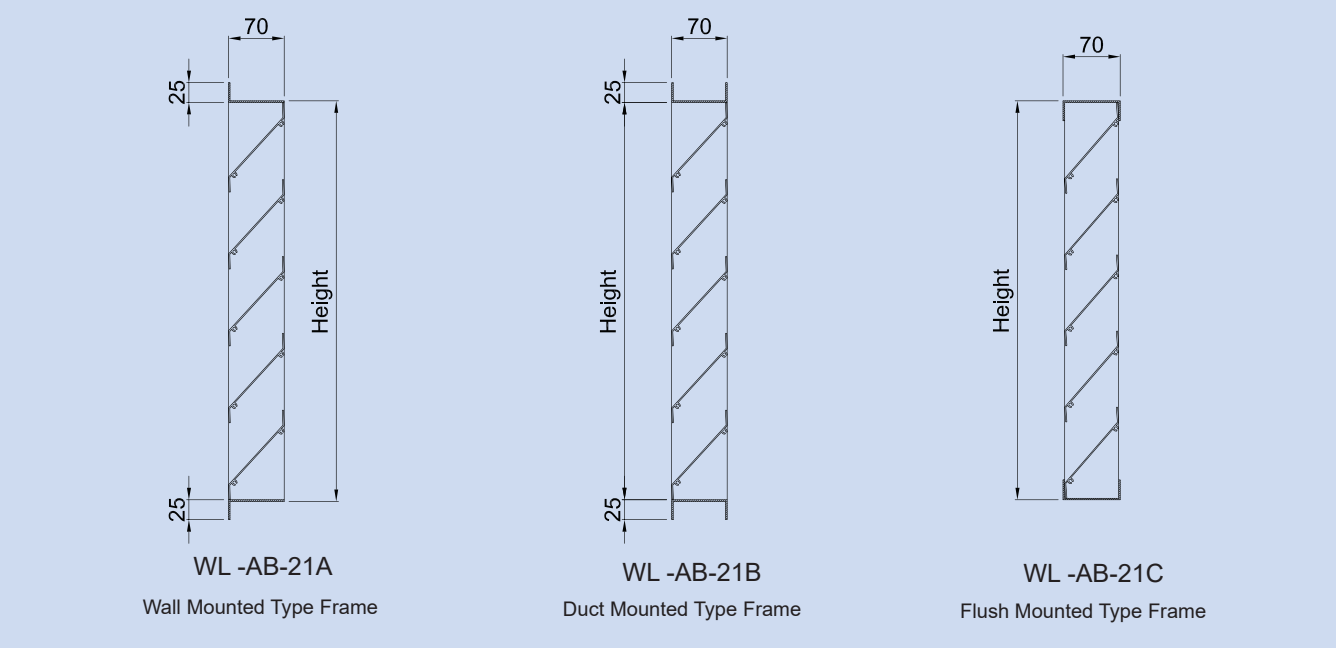

Installation Details

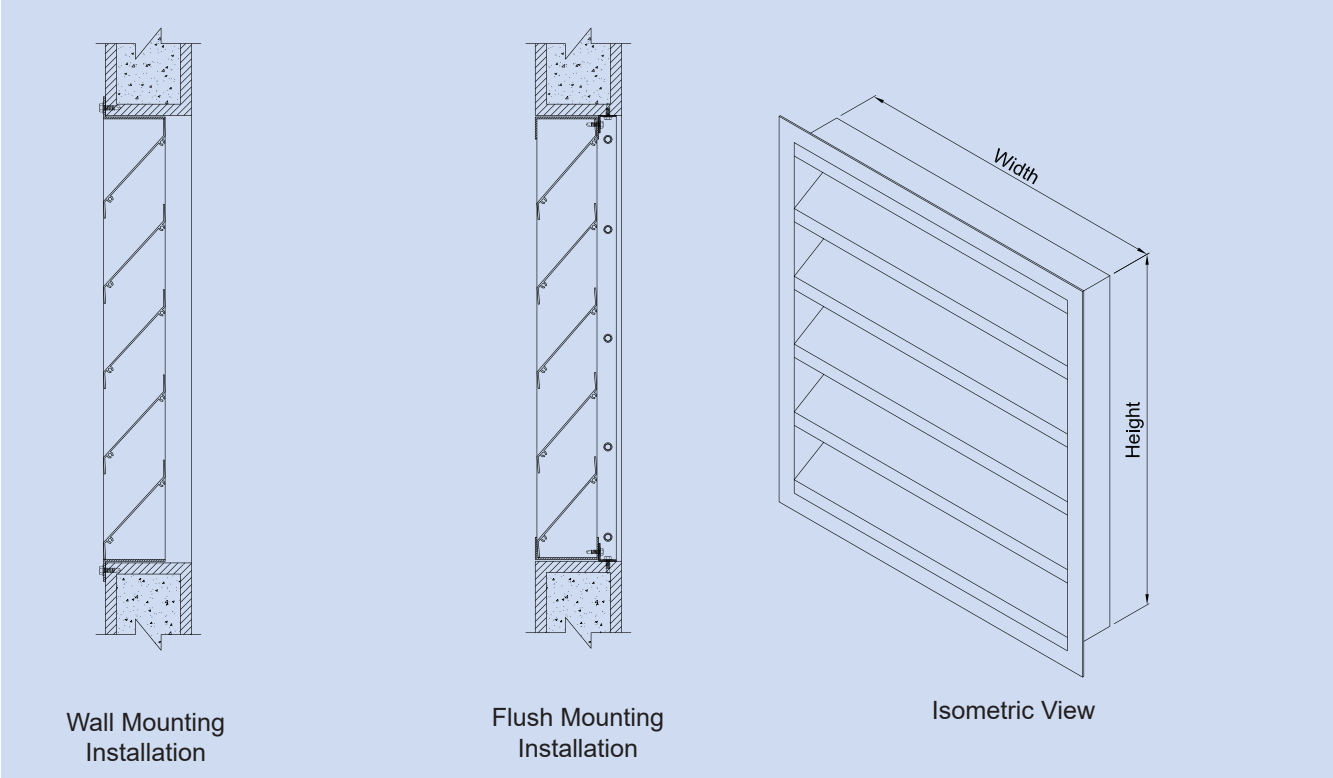

Selected Products of the company have been Classified / Listed / Tested by various international testing authorities.

AMCA500-L Tested Weather Louver

B-20 Series

Engineering and Performance Data

Louver Free Area **Model : WL- AB-21A/B/C**

Height \ Width	300	450	600	750	900	1050	1350	1500	1650	1800	1950	2100	2250	2400	2550	2700	2850	3000
300	0.02	0.04	0.05	0.06	0.08	0.09	0.12	0.13	0.15	0.16	0.18	0.19	0.21	0.22	0.23	0.25	0.26	0.28
450	0.04	0.06	0.08	0.11	0.13	0.16	0.20	0.23	0.25	0.28	0.30	0.32	0.35	0.37	0.39	0.42	0.44	0.47
600	0.06	0.10	0.14	0.18	0.22	0.26	0.34	0.38	0.42	0.46	0.50	0.54	0.58	0.62	0.66	0.70	0.74	0.78
750	0.07	0.12	0.17	0.22	0.27	0.32	0.42	0.47	0.52	0.57	0.62	0.67	0.72	0.77	0.82	0.87	0.92	0.97
900	0.09	0.15	0.21	0.27	0.33	0.39	0.51	0.57	0.63	0.68	0.74	0.80	0.86	0.92	0.98	1.04	1.10	1.16
1050	0.10	0.17	0.24	0.31	0.38	0.45	0.59	0.66	0.73	0.80	0.87	0.94	1.00	1.07	1.14	1.21	1.28	1.35
1350	0.14	0.24	0.33	0.43	0.52	0.62	0.81	0.90	1.00	1.09	1.19	1.28	1.38	1.48	1.57	1.67	1.76	1.86
1500	0.16	0.26	0.37	0.47	0.58	0.68	0.89	1.00	1.10	1.21	1.31	1.42	1.52	1.63	1.73	1.84	1.94	2.05
1650	0.18	0.30	0.42	0.54	0.67	0.79	1.03	1.15	1.27	1.39	1.51	1.63	1.76	1.88	2.00	2.12	2.24	2.36
1800	0.20	0.33	0.46	0.59	0.72	0.85	1.11	1.24	1.37	1.50	1.63	1.77	1.90	2.03	2.16	2.29	2.42	2.55
1950	0.21	0.35	0.49	0.63	0.77	0.91	1.19	1.33	1.48	1.62	1.76	1.90	2.04	2.18	2.32	2.46	2.60	2.74
2100	0.22	0.37	0.53	0.68	0.83	0.98	1.28	1.43	1.58	1.73	1.88	2.03	2.18	2.33	2.48	2.63	2.78	2.93
2250	0.25	0.41	0.58	0.75	0.91	1.08	1.41	1.58	1.75	1.91	2.08	2.25	2.41	2.58	2.75	2.91	3.08	3.25
2400	0.26	0.44	0.62	0.79	0.97	1.14	1.50	1.67	1.85	2.03	2.20	2.38	2.55	2.73	2.91	3.08	3.26	3.44
2550	0.28	0.46	0.65	0.84	1.02	1.21	1.58	1.77	1.95	2.14	2.32	2.51	2.70	2.88	3.07	3.25	3.44	3.63
2700	0.30	0.50	0.71	0.91	1.11	1.31	1.72	1.92	2.12	2.32	2.53	2.73	2.93	3.13	3.33	3.54	3.74	3.94
2850	0.32	0.53	0.74	0.95	1.16	1.38	1.80	2.01	2.22	2.44	2.65	2.86	3.07	3.28	3.49	3.71	3.92	4.13
3000	0.33	0.55	0.77	1.00	1.22	1.44	1.88	2.10	2.33	2.55	2.77	2.99	3.21	3.43	3.66	3.88	4.10	4.32

Water Penetration V/S Free Area Velocity Graph

Model : WL-AB-21A/B/C; Size : 48” x 48”

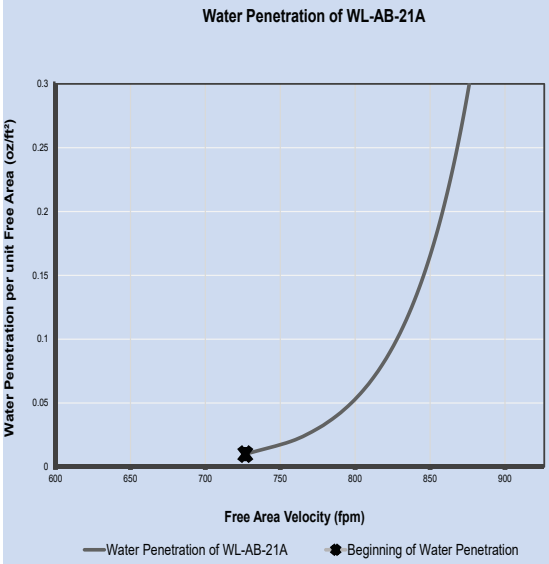

AMCA Standard 500-L Water Penetration Test (15 minutes test duration)
The beginning point of water penetration @ 725 fpm.

Water Penetration V/S Free Area Velocity Graph
Model : WL-AB-21A/B/C; Size : 48” x 48”

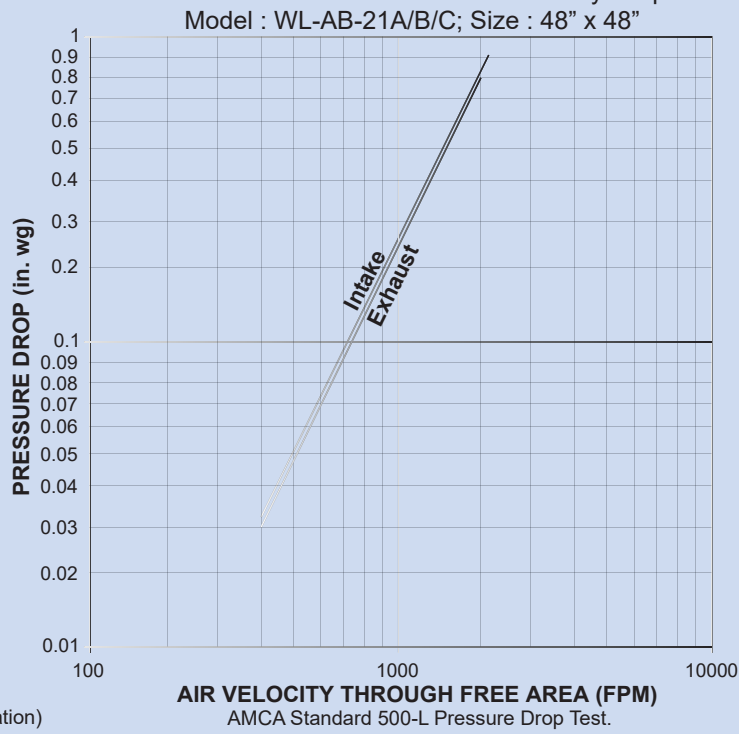

AMCA Standard 500-L Pressure Drop Test.
Data is corrected to standard air density.

BETEC CAD. Industries FZC. certifies that model **WL-AB-21A/B/C** Weather louver is licensed to bear the **AMCA** seal. The ratings shown are based on tests and procedures performed in accordance with the requirements of the **AMCA** Certified Ratings Program. The **AMCA** seal applies to air performance and water penetration for Weather louvers only.

Selected Products of the company have been Classified / Listed / Tested by various international testing authorities.

AMCA500 - L Tested Weather Louvers

B-20 Series

Heavy Duty Non-Drinable Louver

Model : WL-AB-22A/A/B/C

Type : A* - Wall Mounted; **B** - Duct Mounted; **C** - Flush Mounted

BETEC CAD. Manufactures Model WL AB 22A/B/C Aerofoil blade weather louver which are designed for both intake and exhaust air applications. These louvers have been designed to ensure to meet minimum pressure loss and water ingress with high free area.

Aerofoil blade design ensure less pressure drop at high air volume & velocity.

Standard Construction

Frame Material
100 mm deep, 3 mm thick extruded aluminum.

Blade Material
2 mm thick Aerofoil extruded aluminum.

Blade Orientation
Horizontal.

Blade Type
Fixed.

Blade Angle
45° Degree.

Finish
Mill finish.

Optional Fittings

Screen
Galvanized Steel 0.4mm thick
S-3SS Bird screen
S-10 SS Fly screen

Filter
13 / 25 mm thick aluminum filter.

Damper
Control Damper.

Finish
Available with RAL Powder coating, please specify color.

WL-AB-22A

BETEC CAD. Industries FZC. certifies that model **WL-AB-22A/B/C** Weather louver is licensed to bear the **AMCA** seal. The ratings shown are based on tests and procedures performed in accordance with the requirements of the **AMCA** Certified Ratings Program. The **AMCA** seal applies to air performance and water penetration for Weather louvers only.

Features

- Low pressure drop performance with high free area.
- Aluminum construction for low maintenance and high resistance to corrosion.
- Free Area - 34.1%
- Performance as per AMCA 500 - L
- Excellent pressure drop performance.

B-20 Series Model Details				
Meterial Construction				
	Frame		Blade	
Model	Material	Thick	Material	Thick
WL-AB-22A/B/C	A L	3 mm	A L	2 mm

• Alphabet indicates the type of installation
A - Wall Mounted
B - Duct Mounted
C - Flush Mounted

Any Combination of W x H										
WL-AB-22A/B/C										
Width in Inches	4"	6"	10"	12"	16"	20"	30"	36"	48"	96"
Height in inches	4"	6"	10"	12"	16"	20"	30"	36"	48"	96"

Note:
Maximum single module construction - 2 x 2 meters
Multiple module available with mullion.

Note :
Please contact ***BETEC CAD***. for customized design & additional information.

Selected Products of the company have been Classified / Listed / Tested by various international testing authorities.

AMCA500 - L Tested Weather Louvers

B-20 Series

Constructional Details

Model : WL-AB-22A/B/C

A* - Wall Mounted; **B** - Duct Mounted; **C** - Flush Mounted

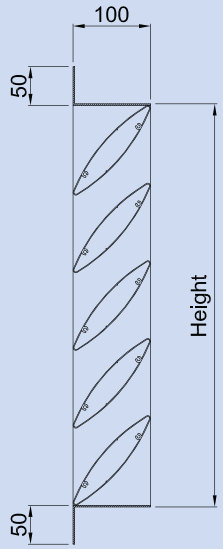

WL -AB-22A
Wall Mounted

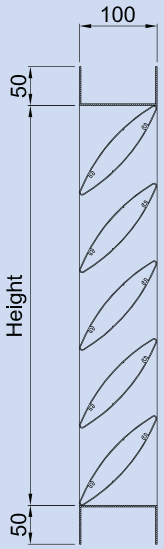

WL -AB-22B
Duct Mounted

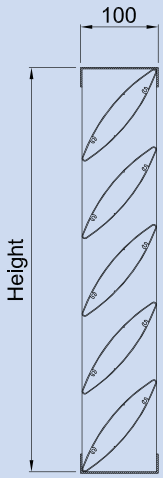

WL -AB-22C
Flush Mounted

Installation Details

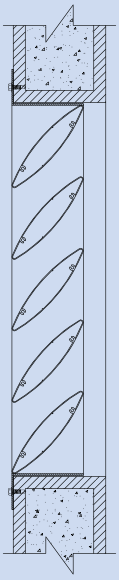

Wall Mounting
Installation

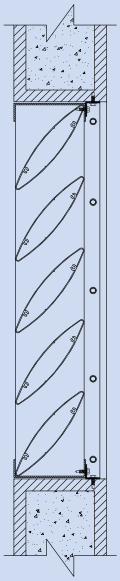

Flush Mounting
Installation

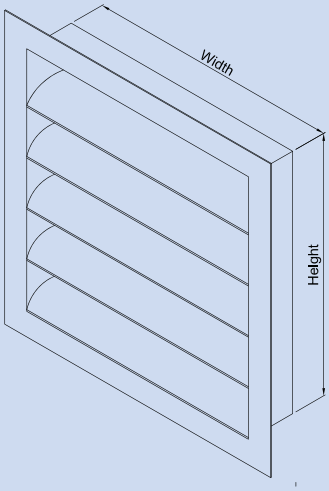

Isometric View

Selected Products of the company have been Classified / Listed / Tested by various international testing authorities.

AMCA500-L Tested Weather Louver

B-20 Series

Engineering and Performance Data

Louver Free Area **Model : WL-AB-22A/B/C**

Height	Width										
L --->	300	450	600	750	900	1050	1200	1500	1800	2100	2400
300	0.01	0.01	0.02	0.02	0.03	0.03	0.04	0.05	0.06	0.07	0.08
450	0.03	0.04	0.06	0.08	0.10	0.12	0.14	0.18	0.22	0.26	0.29
600	0.03	0.06	0.08	0.11	0.13	0.15	0.18	0.23	0.27	0.32	0.37
750	0.05	0.09	0.13	0.16	0.20	0.24	0.28	0.36	0.43	0.51	0.58
900	0.06	0.10	0.14	0.19	0.23	0.27	0.32	0.40	0.49	0.58	0.66
1050	0.06	0.11	0.16	0.21	0.26	0.31	0.35	0.45	0.55	0.64	0.74
1200	0.08	0.14	0.21	0.27	0.33	0.39	0.46	0.58	0.70	0.83	0.95
1500	0.11	0.19	0.27	0.35	0.43	0.51	0.59	0.76	0.92	1.08	1.24
1800	0.12	0.21	0.30	0.40	0.49	0.58	0.67	0.85	1.03	1.22	1.40
2100	0.15	0.26	0.37	0.48	0.59	0.70	0.81	1.03	1.25	1.47	1.69
2400	0.17	0.30	0.43	0.56	0.69	0.82	0.95	1.20	1.46	1.72	1.98

Water Penetration V/S Free Area Velocity Graph

Model : WL-AB-22A/B/C; Size : 48” x 48”

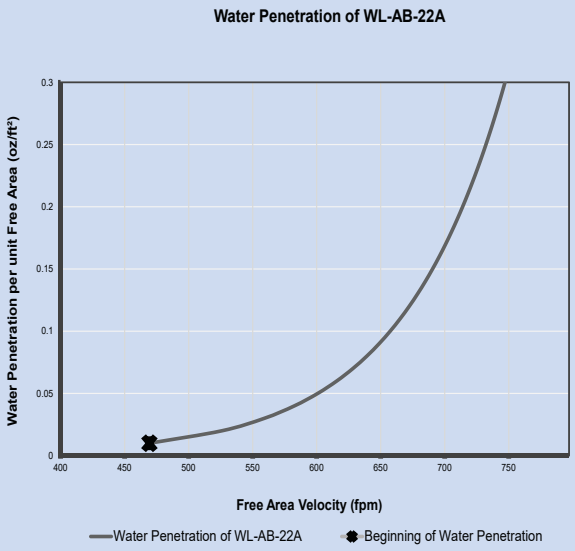

AMCA Standard 500-L Water Penetration Test (15 minutes test duration)
The beginning point of water penetration @ 460 fpm.

Water Penetration V/S Free Area Velocity Graph

Model : WL-AB-22A/B/C; Size : 48” x 48”

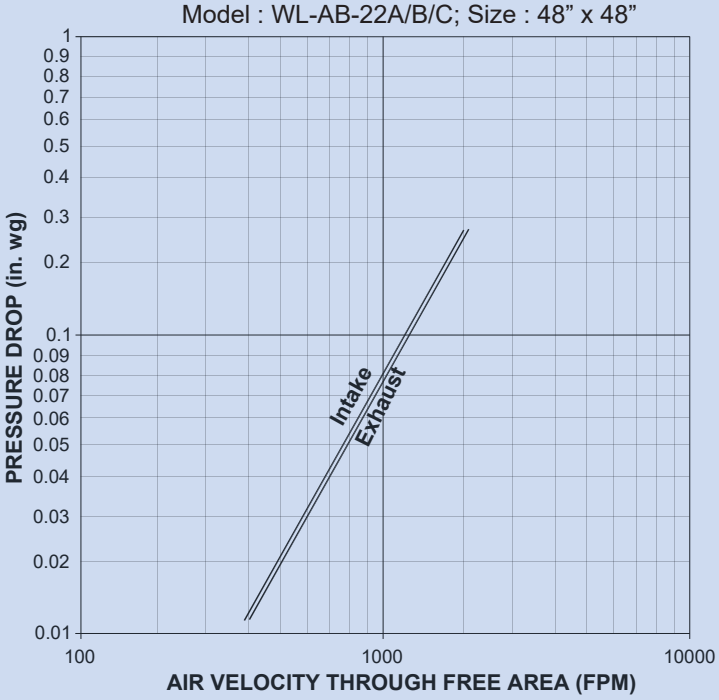

AMCA Standard 500-L Pressure Drop Test.
Data is corrected to standard air density.

BETEC CAD. Industries FZC. certifies that model **WL-AB-22A/B/C** Weather louver is licensed to bear the **AMCA** seal. The ratings shown are based on tests and procedures performed in accordance with the requirements of the **AMCA** Certified Ratings Program. The **AMCA** seal applies to air performance and water penetration for Weather louvers only.

Selected Products of the company have been Classified / Listed / Tested by various international testing authorities.

AMCA500-L Tested Weather Louver

B-30 Series

Heavy duty Stationary Louver

Model : WL-AB-31A/B/C

Type : A* - Wall Mounted; **B** - Duct Mounted; **C** - Flush Mounted

BETEC CAD. Manufactures Model WL AB 31 A/B/C Weather Louvers is licensed to bear the AMCA Seal.The ratings shown are based on tests and procedures performed in accordance with the requirements of the AMCA Certified Ratings Program. The AMCA Seal applies to air performance and water penetration ratings for Aluminum louvers only.

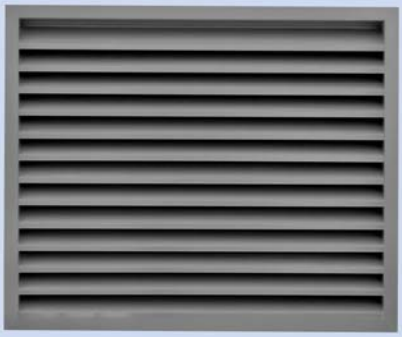

WL-AB-31A

BETEC CAD. Industries (FZC) Certifies Model **WL-AB-31A/B/C** Weather Louvers is licensed to bear the **AMCA** Seal.The ratings shown are based on tests and procedures performed in accordance with the requirements of the **AMCA** Certified Ratings Program. The **AMCA** Seal applies to air performance and water penetration ratings for Aluminum louvers only.

Standard Construction

Frame Material
100 mm deep, 3 mm thick extruded aluminum.

Blade Material
2 mm thick extruded aluminum.

Blade Orientation
Horizontal.

Blade Type
Fixed.

Blade Angle
45° Degree

Finish
Mill finish

Optional Fittings

Screen
Galvanized Steel 0.4mm thick
S-3 SS Bird screen
S-10 SS Fly screen

Filter
13 / 25 mm thick aluminum filter

Damper
Control Damper.

Finish
Available with RAL Powder coating, please specify color.

Features

- Performance as per AMCA 500 - L
- Excellent pressure drop performance.
- Aluminum construction for low maintenance and high resistance to corrosion.
- Heavy duty durable construction.
- Free area - 52%
- Beginning of water Penetration @ fpm 1045

B-30 Series Model Details				
Meterial Construction				
Model	Frame		Blade	
	Material	Thick	Material	Thick
WL-BC-31A/B/C	A L	3 mm	A L	2 mm

Alphabet indicates the type of installation
A - Wall Mounted
B - Duct Mounted
C - Flush Mounted

Any Combination of W x H										
WL-AB-31A/B/C										
Width in Inches	4"	6"	10"	12"	16"	20"	30"	36"	48"	96"
Height in inches	4"	6"	10"	12"	16"	20"	30"	36"	48"	96"

Note:
Maximum single Module Construction - 2 x 1.5 meters.
Multiple module available with mullion.

Note :
Please contact ***BETEC CAD***. for customized design & additional information.

Selected Products of the company have been Classified / Listed / Tested by various international testing authorities.

AMCA500-L Tested Weather Louver

B-30 Series

Constructional Details

Model : WL-AB-31A/B/C

A* - Wall Mounted; **B** - Duct Mounted; **C** - Flush Mounted

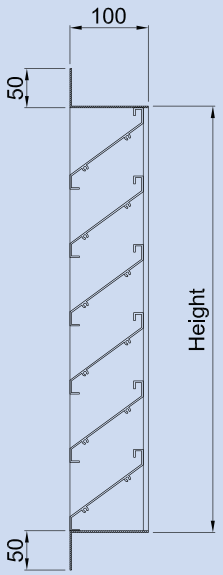

WL -AB-31A
Wall Mounted Type Frame

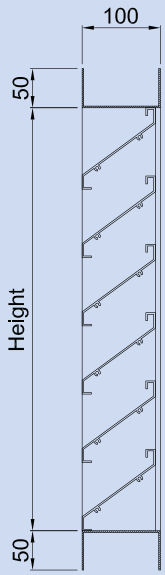

WL -AB-31B
Duct Mounted Type Frame

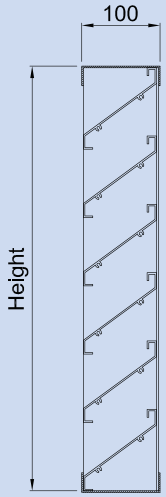

WL -AB-31C
Flush Mounted Type Frame

Installation Details :

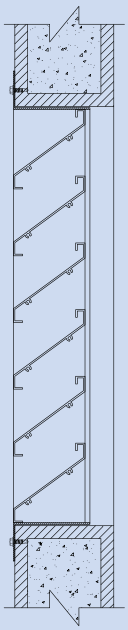

Wall Mounting Installation

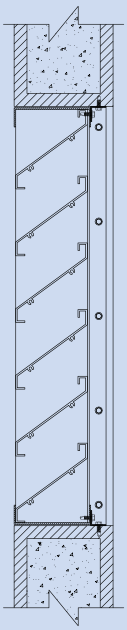

Flush Mounting Installation

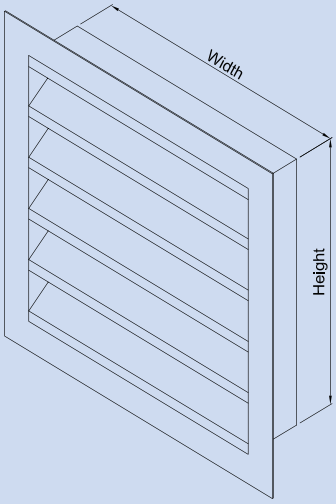

Isometric View

Selected Products of the company have been Classified / Listed / Tested by various international testing authorities.

AMCA500-L Tested Weather Louver

B-30 Series

Engineering and Performance Data

Louver Free Area **Model : WL-AB-31A/B/C**

Height \ Width	300	450	600	750	900	1050	1350	1500	1650	1800	1950	2100	2250	2400	2550	2700	2850	3000
300	0.01	0.02	0.03	0.04	0.05	0.06	0.08	0.09	0.10	0.11	0.12	0.13	0.14	0.15	0.16	0.17	0.18	0.19
450	0.04	0.06	0.09	0.12	0.14	0.17	0.22	0.25	0.27	0.30	0.33	0.35	0.38	0.41	0.43	0.46	0.49	0.51
600	0.05	0.09	0.12	0.16	0.20	0.24	0.31	0.35	0.38	0.42	0.46	0.50	0.53	0.57	0.61	0.64	0.68	0.72
750	0.06	0.11	0.16	0.21	0.26	0.30	0.40	0.45	0.50	0.54	0.59	0.64	0.69	0.73	0.78	0.83	0.88	0.93
900	0.09	0.15	0.21	0.28	0.34	0.41	0.54	0.60	0.67	0.73	0.79	0.86	0.92	0.99	1.05	1.12	1.18	1.25
1050	0.10	0.18	0.25	0.33	0.40	0.48	0.63	0.70	0.78	0.85	0.93	1.00	1.08	1.15	1.23	1.30	1.38	1.45
1350	0.14	0.24	0.34	0.44	0.55	0.65	0.85	0.95	1.06	1.16	1.26	1.36	1.47	1.57	1.67	1.77	1.88	1.98
1500	0.15	0.26	0.38	0.49	0.60	0.72	0.94	1.05	1.17	1.28	1.39	1.51	1.62	1.73	1.84	1.96	2.07	2.18
1650	0.17	0.30	0.43	0.56	0.69	0.82	1.08	1.21	1.34	1.47	1.60	1.73	1.86	1.99	2.11	2.24	2.37	2.50
1800	0.19	0.33	0.47	0.61	0.75	0.89	1.17	1.31	1.45	1.59	1.73	1.87	2.01	2.15	2.29	2.43	2.57	2.71
1950	0.21	0.37	0.52	0.68	0.84	0.99	1.31	1.46	1.62	1.78	1.93	2.09	2.25	2.40	2.56	2.72	2.87	3.03
2100	0.22	0.39	0.56	0.73	0.89	1.06	1.39	1.56	1.73	1.90	2.06	2.23	2.40	2.57	2.73	2.90	3.07	3.24
2250	0.24	0.42	0.59	0.77	0.95	1.13	1.48	1.66	1.84	2.02	2.20	2.37	2.55	2.73	2.91	3.08	3.26	3.44
2400	0.26	0.45	0.65	0.84	1.04	1.23	1.62	1.82	2.01	2.20	2.40	2.59	2.79	2.98	3.18	3.37	3.57	3.76
2550	0.27	0.48	0.68	0.89	1.09	1.30	1.71	1.92	2.12	2.33	2.53	2.74	2.94	3.15	3.35	3.56	3.76	3.97
2700	0.29	0.50	0.72	0.94	1.15	1.37	1.80	2.01	2.23	2.45	2.66	2.88	3.09	3.31	3.53	3.74	3.96	4.17
2850	0.31	0.54	0.77	1.01	1.24	1.47	1.94	2.17	2.40	2.63	2.87	3.10	3.33	3.56	3.80	4.03	4.26	4.49
3000	0.32	0.57	0.81	1.05	1.30	1.54	2.03	2.27	2.51	2.75	3.00	3.24	3.48	3.73	3.97	4.21	4.46	4.70

Water Penetration V/S Free Area Velocity Graph
Model : WL-AB-31A/B/C; Size : 48” x 48”

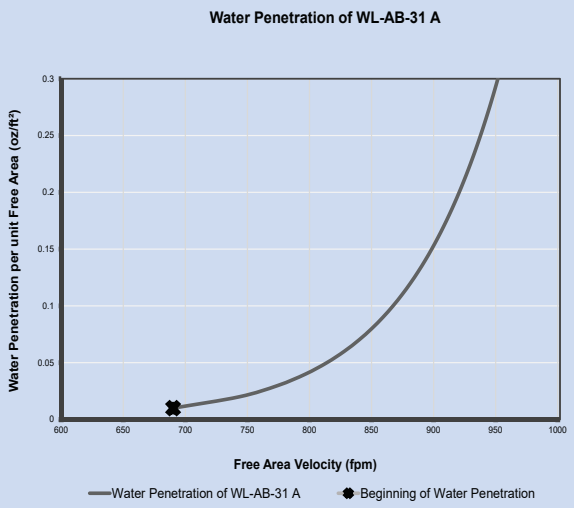

AMCA Standard 500-L Water Penetration Test (15 minutes test duration)
The beginning point of water penetration @ 694.1 fpm.

Water Penetration V/S Free Area Velocity Graph
Model : WL-AB-31A/B/C; Size : 48” x 48”

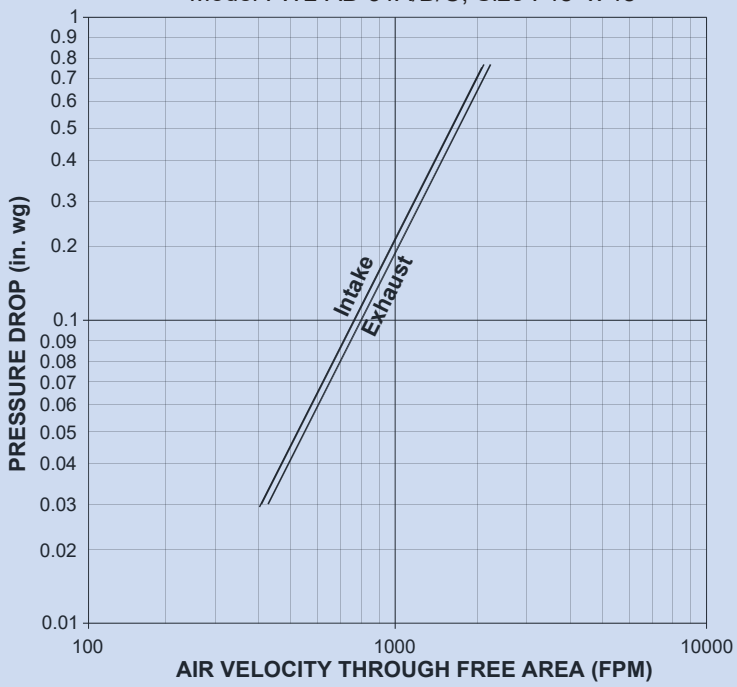

AMCA Standard 500-L Pressure Drop Test.
Data is corrected to standard air density.

BETEC CAD. Industries (FZC) Certifies Model **WL-AB-31A** Weather Louvers is licensed to bear the **AMCA** Seal.The ratings shown are based on tests and procedures performed in accordance with the requirements of the **AMCA** Certified Ratings Program. The **AMCA** Seal applies to air performance and water penetration ratings for Aluminum louvers only.

Selected Products of the company have been Classified / Listed / Tested by various international testing authorities.

AMCA500-L Tested Weather Louver

B-30 Series

Wind Driven Rain Louver

Model : WL-AB-32C

Type : C - Flush Mounted

BETEC CAD. Manufactures Model WL AB 32C weather louver which are designed for both intake and exhaust air applications, with and without damper combinations. These louvers have been designed for minimum pressure loss and low self-generated aerodynamic noise.

WL-AB-32C

BETEC CAD. Industries (FZC) Certifies Model **WL-AB-32C** Weather Louvers is licensed to bear the **AMCA** Seal.The ratings shown are based on tests and procedures performed in accordance with the requirements of the **AMCA** Certified Ratings Program. The **AMCA** Seal applies to air performance,wind-driven rain and water penetration ratings for Aluminum louvers only.

Standard Construction

Frame Material
120 mm deep, 2 mm thick extruded aluminum.

Blade Material
2 mm extruded aluminum.

Blade Orientation
Horizontal.

Blade Type
Fixed.

Finish
Mill finish.

Features

- Closely spaced horizontal blades minimize the penetration of wind-driven rain, reducing damage and additional operating expenses.
- Excellent pressure drop performance.
- Free area - 38.8%
- Performance as per AMCA 500 - L
- Aluminum construction for low maintenance and high resistance to corrosion.

Optional Fittings

Screen
Galvanized Steel 0.4mm Thick
S-3 SS Bird screen
S-10 SS Fly screen

Finish
Available with RAL Powder coating, please specify color.

AB-30Series Model Details				
Meterial Construction				
	Frame		Blade	
Model	Material	Thick	Material	Thick
WL-AB-32C	A L	2 mm	A L	2 mm

- Alphabet indicates the type of installation

C - Flush Mounted

Any Combination of W x H										
WL-AB-32C										
Width in Inches	4"	6"	10"	12"	16"	20"	30"	36"	48"	96"
Height in inches	4"	6"	10"	12"	16"	20"	30"	36"	48"	96"

Note: Maximum single module Construction - 2 x 2 meters
Multiple module available with mullion.

Note :
Please contact ***BETEC CAD***. for customized design & additional information.

Selected Products of the company have been Classified / Listed / Tested by various international testing authorities.

AMCA500-L Tested Weather Louver

B-30 Series

Constructional Details

Model : WL-AB-32C

Type : C* - Flush Mounted

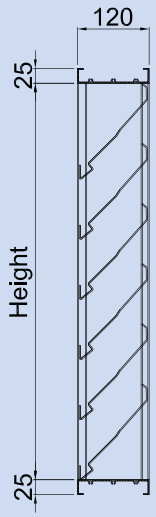

WL-AB-32C

Flush Mounted Type

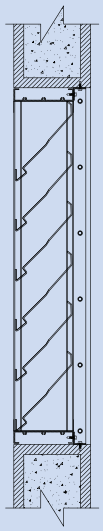

Installation

Flush Mounted Type

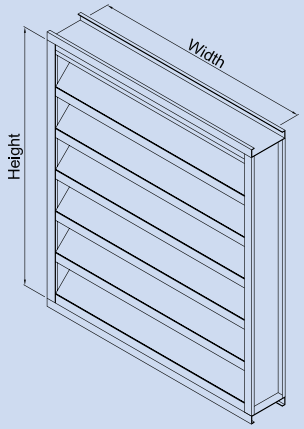

Isometric View

AMCA500-L Tested Weather Louver

B-30 Series

Engineering and Performance Data

Louver Free Area **Model : WL-AB-32C**

Height \ Width	300	450	600	750	900	1050	1350	1500	1650	1800	1950	2100	2250	2400	2550	2700	2850	3000
300	0.01	0.02	0.03	0.04	0.05	0.05	0.07	0.08	0.09	0.10	0.10	0.11	0.12	0.13	0.14	0.15	0.15	0.16
450	0.03	0.05	0.08	0.10	0.12	0.14	0.18	0.20	0.22	0.24	0.26	0.28	0.30	0.32	0.34	0.37	0.39	0.41
600	0.06	0.10	0.14	0.18	0.21	0.25	0.33	0.37	0.40	0.44	0.48	0.52	0.56	0.59	0.63	0.67	0.71	0.75
750	0.08	0.13	0.18	0.23	0.28	0.33	0.43	0.48	0.53	0.58	0.64	0.69	0.74	0.79	0.84	0.89	0.94	0.99
900	0.10	0.16	0.23	0.29	0.35	0.41	0.54	0.60	0.67	0.73	0.79	0.85	0.92	0.98	1.04	1.10	1.17	1.23
1050	0.12	0.20	0.27	0.35	0.42	0.50	0.65	0.72	0.80	0.87	0.95	1.02	1.10	1.17	1.25	1.32	1.40	1.47
1350	0.16	0.26	0.36	0.46	0.56	0.66	0.86	0.96	1.06	1.16	1.26	1.36	1.46	1.56	1.65	1.75	1.85	1.95
1500	0.18	0.29	0.41	0.52	0.63	0.74	0.96	1.08	1.19	1.30	1.41	1.52	1.64	1.75	1.86	1.97	2.08	2.19
1650	0.20	0.33	0.45	0.58	0.70	0.82	1.07	1.20	1.32	1.45	1.57	1.69	1.82	1.94	2.07	2.19	2.32	2.44
1800	0.23	0.37	0.51	0.66	0.80	0.94	1.22	1.36	1.50	1.65	1.79	1.93	2.07	2.21	2.35	2.50	2.64	2.78
1950	0.25	0.40	0.56	0.71	0.87	1.02	1.33	1.48	1.64	1.79	1.94	2.10	2.25	2.40	2.56	2.71	2.87	3.02
2100	0.27	0.44	0.60	0.77	0.94	1.10	1.43	1.60	1.77	1.93	2.10	2.26	2.43	2.60	2.76	2.93	3.10	3.26
2250	0.29	0.47	0.65	0.83	1.00	1.18	1.54	1.72	1.90	2.08	2.25	2.43	2.61	2.79	2.97	3.15	3.32	3.50
2400	0.31	0.50	0.69	0.88	1.07	1.26	1.65	1.84	2.03	2.22	2.41	2.60	2.79	2.98	3.17	3.36	3.55	3.74
2550	0.33	0.53	0.74	0.94	1.14	1.35	1.75	1.96	2.16	2.36	2.56	2.77	2.97	3.17	3.38	3.58	3.78	3.99
2700	0.35	0.57	0.78	1.00	1.21	1.43	1.86	2.07	2.29	2.50	2.72	2.94	3.15	3.37	3.58	3.80	4.01	4.23
2850	0.37	0.60	0.83	1.05	1.28	1.51	1.97	2.19	2.42	2.65	2.88	3.11	3.33	3.56	3.79	4.02	4.24	4.47
3000	0.40	0.64	0.89	1.13	1.38	1.62	2.11	2.36	2.61	2.85	3.10	3.34	3.59	3.83	4.08	4.32	4.57	4.81

Water Penetration V/S Free Area Velocity Graph
Model : WL-AB-32C; Size : 48” x 48”

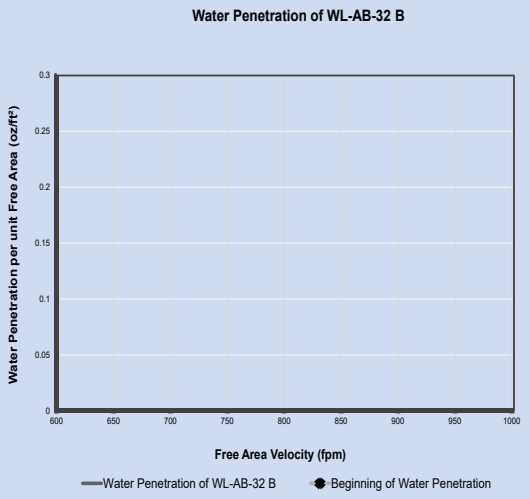

AMCA Standard 500-L Water Penetration Test (15 minutes test duration)
The beginning point of water penetration is greater than 1250 fpm.

Water Penetration V/S Free Area Velocity Graph
Model : WL-AB-32C; Size : 48” x 48”

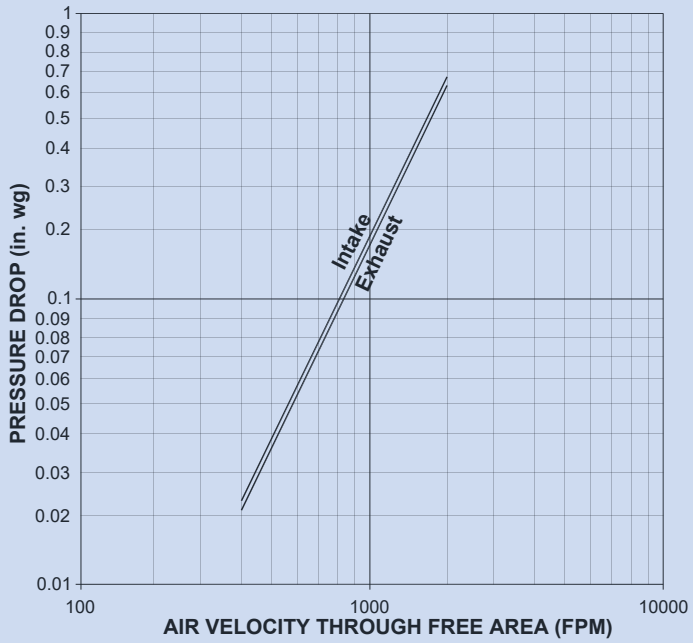

AMCA Standard 500-L Pressure Drop Test.
Data is corrected to standard air density.

BETEC CAD. Industries (FZC) Certifies Model **WL-AB-32C** Weather Louvers is licensed to bear the **AMCA** Seal.The ratings shown are based on tests and procedures performed in accordance with the requirements of the **AMCA** Certified Ratings Program. The **AMCA** Seal applies to air performance,wind-driven rain and water penetration ratings for Aluminum louvers only.

Selected Products of the company have been Classified / Listed / Tested by various international testing authorities.

AMCA500-L Tested Weather Louver

B-30 Series

Wind - Driven Rain Performance

Test size is **39.375" x 39.375"** Core area

29 mph (46 kph) wind & 3" per hour rain condition			
Ventilation Air Velocity (fpm)	Ventilation Air Flow (cfm)	Water Penetration Effectiveness %	Water Penetration Classification
0	0	98.3	B
136	1463	97.3	B
196	2112	97.2	B
279	3003	96.9	B
375	4040	96.9	B
466	5016	95.7	B
584	6293	93.5	C
682	7346	93.1	C
782	8417	91.2	C
864	9307	78.2	D
991	10668	58.7	D

NOTES

1. Wind Driven Rain Penetration Classes:

Class	Effectiveness
A	1 to .99
B	0.989 to 0.95
C	0.949 to 0.80
D	Below 0.8

2. Intake Discharge Loss Class 2
Discharge Loss Coefficient is calculated by dividing a louvers' actual airflow rate vs. a theoretical airflow for the opening. It provides an indication of the louvers' airflow characteristics.

Discharge Loss Classes:

Class	Discharge Loss Coefficient:
1	0.4 and above
2	0.3 to 0.399
3	0.2 to 0.299
4	0.199 and below

(The higher the coefficient, the less resistance to airflow.)

3. The AMCA Wind DrivenRain Test is perforemed in a laboratory environment and incorporates controlled wind, water and system airflow effects. In actual field installations, storms may create conditions not considered by the AMCA test.

AMCA500-L Tested Weather Louver

B-40 Series

Wind Driven Rain Louver

Model : WL-AB-40C

Type : C* - Flush Mounted

BETEC CAD. Manufactures Model WL AB 40C Weather Louvers is licensed to bear the AMCA Seal.The ratings shown are based on tests and procedures performed in accordance with the requirements of the AMCA Certified Ratings Program.

The AMCA Seal applies to air performance, water penetration and wind-driven rain ratings for Aluminum louvers only.

WL-AB-40C

BETEC CAD. Industries (FZC) Certifies Model **WL-BC-40C** Weather Louvers is licensed to bear the AMCA Seal.The ratings shown are based on tests and procedures performed in accordance with the requirements of the **AMCA** Certified Ratings Program. The **AMCA** Seal applies to air performance,wind-driven rain and water penetration ratings for Aluminum louvers only.

Standard Construction

Frame Material
120 mm deep, 2 mm thick extruded aluminum.

Blade Material
2 mm thick extruded aluminum.

Blade Orientation
Horizontal.

Blade Type
Fixed.

Finish
Mill finish.

Optional Fittings

drain sill.

Screen
Galvanized Steel 0.4mm Thick
S-3 SS Bird screen
S-10 SS Fly screen

Finish
Available with Powder coating , please specify color.

Features

- Closely spaced horizontal blades minimize the penetration of wind-driven rain, reducing damage and additional operating expenses.
- Performance as per AMCA 500 - L
- Excellent pressure drop performance.
- Aluminum construction for low maintenance and high resistance to corrosion.
- Free area - 65.8%
- Begnning of water penetration @ 892.9 fpm

AB-40 Series Model Details				
Meterial Construction				
	Frame		Blade	
Model	Material	Thick	Material	Thick
WL-AB-40C	A L	2 mm	A L	2 mm

Alphabet indicates the type of installation
C - Flush Mounted

Any Combination of W x H										
WL-AB-40C										
Width in Inches	4"	6"	10"	12"	16"	20"	30"	36"	48"	96"
Height in inches	4"	6"	10"	12"	16"	20"	30"	36"	48"	96"

Note: Maximum single module Construction - 2 x 2 meters
Multiple module available with mullion.

Note :
Please contact ***BETEC CAD***. for customized design & additional information.

Selected Products of the company have been Classified / Listed / Tested by various international testing authorities.

AMCA500-L Tested Weather Louvers

B-40 Series

Constructional Details

Model : WL-AB-40C

Type : C* - Flush Mounted

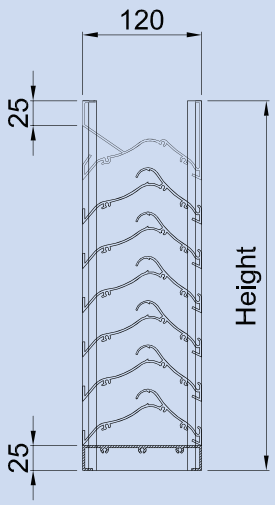

WL-AB-40C
Flush Mounted Type

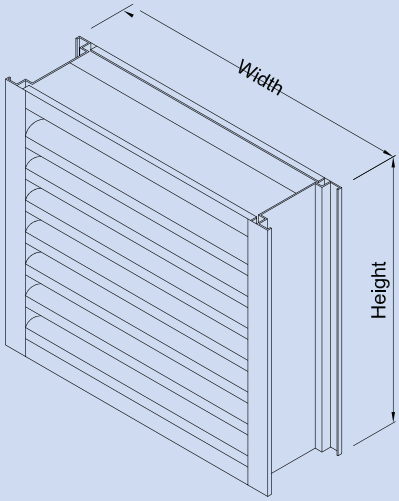

Isometric View

Installation Details

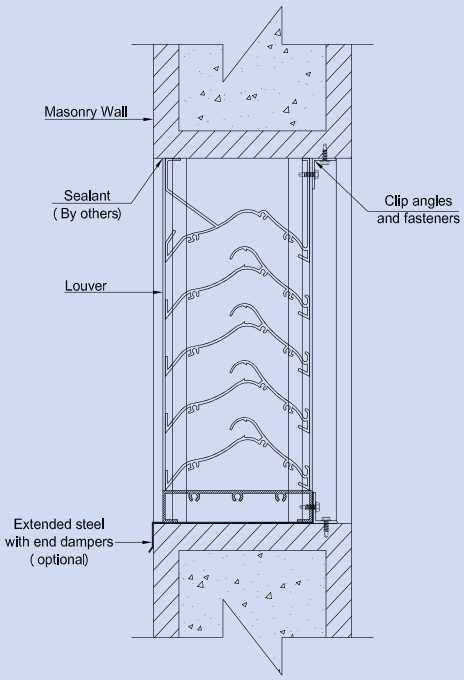

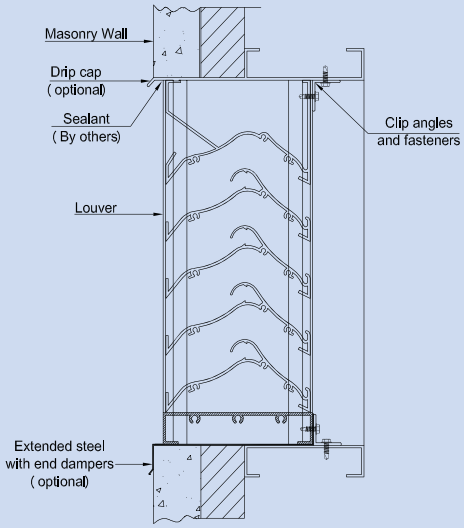

Selected Products of the company have been Classified / Listed / Tested by various international testing authorities.

AMCA500-L Tested Weather Louver

B-40 Series

Engineering and Performance Data

Louver Free Area **Model : WL-AB-40C**

Height \ Width	300	450	600	750	900	1050	1350	1500	1650	1800	1950	2100	2250	2400	2550	2700	2850	3000
300	0.03	0.05	0.07	0.09	0.11	0.13	0.17	0.19	0.21	0.23	0.25	0.27	0.29	0.31	0.33	0.35	0.37	0.39
450	0.06	0.09	0.13	0.16	0.20	0.24	0.31	0.34	0.38	0.41	0.45	0.48	0.52	0.56	0.59	0.63	0.66	0.70
600	0.08	0.13	0.18	0.23	0.28	0.33	0.43	0.48	0.53	0.58	0.63	0.69	0.74	0.79	0.84	0.89	0.94	0.99
750	0.10	0.17	0.23	0.29	0.36	0.42	0.55	0.61	0.67	0.73	0.80	0.86	0.92	0.99	1.05	1.11	1.18	1.24
900	0.13	0.21	0.29	0.36	0.44	0.52	0.68	0.76	0.83	0.91	0.99	1.07	1.15	1.23	1.31	1.38	1.46	1.54
1050	0.15	0.25	0.34	0.43	0.53	0.62	0.81	0.90	1.00	1.09	1.18	1.28	1.37	1.47	1.56	1.65	1.75	1.84
1350	0.20	0.32	0.44	0.57	0.69	0.81	1.05	1.18	1.30	1.42	1.54	1.66	1.78	1.91	2.03	2.15	2.27	2.39
1500	0.23	0.36	0.50	0.64	0.77	0.91	1.19	1.32	1.46	1.60	1.73	1.87	2.01	2.15	2.28	2.42	2.56	2.69
1650	0.25	0.40	0.56	0.71	0.86	1.01	1.32	1.47	1.62	1.78	1.93	2.08	2.23	2.39	2.54	2.69	2.84	3.00
1800	0.27	0.44	0.60	0.77	0.93	1.10	1.43	1.59	1.76	1.93	2.09	2.26	2.42	2.59	2.75	2.92	3.08	3.25
1950	0.30	0.48	0.66	0.84	1.02	1.20	1.56	1.74	1.92	2.10	2.28	2.46	2.65	2.83	3.01	3.19	3.37	3.55
2100	0.32	0.52	0.71	0.91	1.11	1.30	1.69	1.89	2.09	2.28	2.48	2.67	2.87	3.07	3.26	3.46	3.65	3.85
2250	0.34	0.55	0.76	0.97	1.18	1.39	1.80	2.01	2.22	2.43	2.64	2.85	3.06	3.27	3.48	3.68	3.89	4.10
2400	0.37	0.59	0.82	1.04	1.26	1.49	1.94	2.16	2.39	2.61	2.83	3.06	3.28	3.51	3.73	3.95	4.18	4.40
2550	0.39	0.63	0.87	1.11	1.35	1.59	2.07	2.31	2.55	2.79	3.03	3.27	3.51	3.75	3.98	4.22	4.46	4.70
2700	0.41	0.67	0.92	1.17	1.42	1.68	2.18	2.43	2.69	2.94	3.19	3.44	3.69	3.95	4.20	4.45	4.70	4.96
2850	0.44	0.71	0.97	1.24	1.51	1.78	2.31	2.58	2.85	3.12	3.38	3.65	3.92	4.19	4.45	4.72	4.99	5.26
3000	0.46	0.75	1.03	1.31	1.60	1.88	2.44	2.73	3.01	3.29	3.58	3.86	4.14	4.43	4.71	4.99	5.27	5.56

Water Penetration V/S Free Area Velocity Graph

Model : WL-AB-40C; Size : 48” x 48”

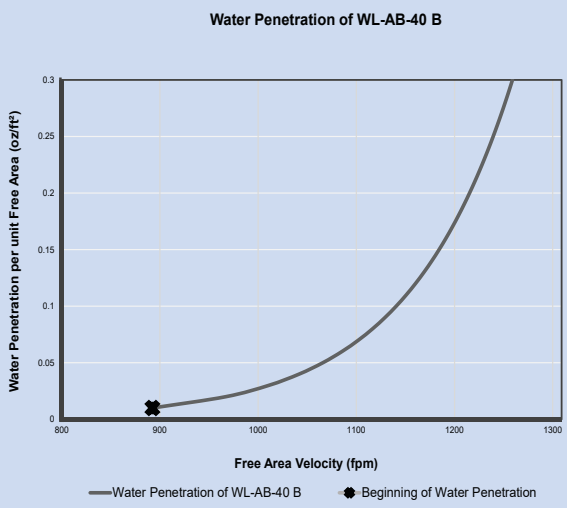

AMCA Standard 500-L Water Penetration Test (15 minutes test duration)
The beginning point of water is 892.9 fpm.

Water Penetration V/S Free Area Velocity Graph

Model : WL-AB-40C; Size : 48” x 48”

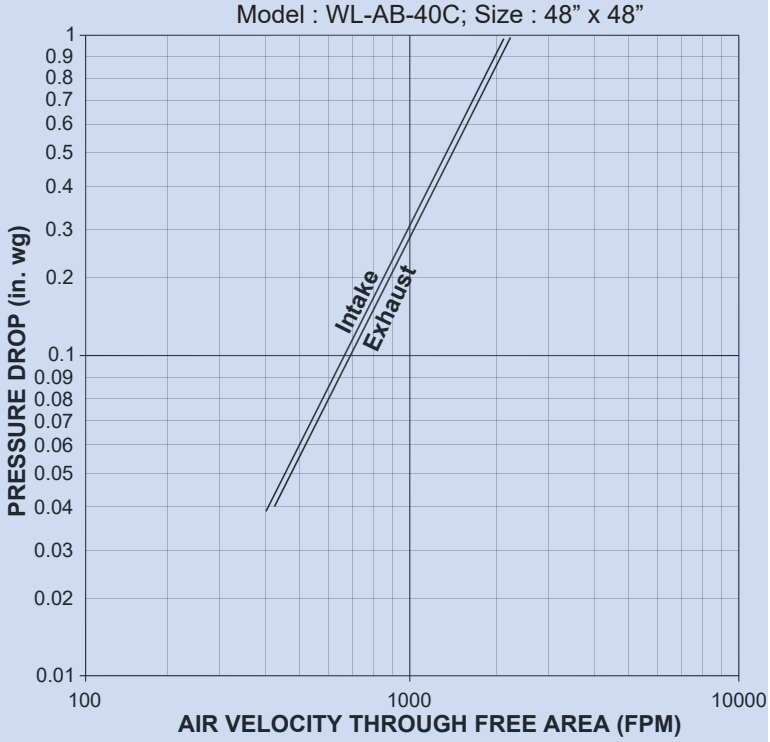

AMCA Standard 500-L Pressure Drop Test.
Data is corrected to standard air density.

BETEC CAD. Industries (FZC) Certifies Model **WL-AB-40A/B/C** Weather Louvers is licensed to bear the AMCA Seal.The ratings shown are based on tests and procedures performed in accordance with the requirements of the **AMCA** Certified Ratings Program. The **AMCA** Seal applies to air performance,wind-driven rain and water penetration ratings for Aluminum louvers only.

Selected Products of the company have been Classified / Listed / Tested by various international testing authorities.

AMCA500 - L Tested Weather Louvers

B-40 Series

Wind - Driven Rain Performance

Test size is **39.375" x 39.375"** Core area

29 mph (46 kph) wind & 3" per hour rain condition			
Ventilation Air Velocity (fpm)	Ventilation Air Flow (cfm)	Water Penetration Effectiveness %	Water Penetration Classification
0	0		
126	1355	99.4	A
188	2021	99.3	A
286	3082	99	A
382	4108	98.6	B
469	5047	88.8	C
582	6271	72.6	D
685	7379	50.2	D
765	8238	38.4	D
866	9323	22.1	D
985	10604	10.9	D

50 mph (80 kph) wind & 8" per hour rain conditions			
Ventilation Air Velocity (fpm)	Ventilation Air Flow (cfm)	Water Penetration Effectiveness %	Water Penetration Classification
0	0	96.10	B
99	1062	93.60	C
198	2130	92.30	C
284	3055	90.70	C
407	4387	88.10	C
488	5252	85.80	C
578	6225	85.20	C
673	7242	78.20	D
783	8432	73.20	D
888	9560	67.60	D
970	10448	63.80	D

NOTES

1. Wind Driven Rain Penetration Classes:

Class	Effectiveness
A	1 to .99
B	0.989 to 0.95
C	0.949 to 0.80
D	Below 0.8

2. Intake Discharge Loss Class 2
Discharge Loss Coefficient is calculated by dividing a louvers' actual airflow rate vs. a theoretical airflow for the opening. It provides an indication of the louvers' airflow characteristics.

Discharge Loss Classes:

Class	Discharge Loss Coefficient:
1	0.4 and above
2	0.3 to 0.399
3	0.2 to 0.299
4	0.199 and below

(The higher the coefficient, the less resistance to airflow.)

3. The AMCA Wind DrivenRain Test is perforemed in a laboratory environment and incorporates controlled wind, water and system airflow effects. In actual field installations, storms may create conditions not considered by the AMCA test.

Selected Products of the company have been Classified / Listed / Tested by various international testing authorities.

Motorized Weather Louver - MWL

B-50 Series

Type : Motorized Louver

Model : MWL-GB-51A; Galvanized Construction.

Blade Type : Single skin - 3V Blades

BETEC CAD. manufactures Motorized weather louvers are square and rectangular type with parallel operation having single skin blade design. These louvers are subjected to medium pressure applications to achieve low leakage efficient operation.
The square and rectangular type Motorized louvers are designed for handling maximum air capacities at minimum pressure drop.

MWL-GB-51A

Louver Performance Ratings

Operating Pressure - 4" wg (1000Pa) Max
Velocity - 1500 fpm (7.5 m/s)

Standard Construction

Frame
5.1"x 1" x 18 gauge (130 x 28 x 1.2 mm) roll formed galvanized steel 'C' Channel.
Blades
6" (152mm) wide,1.5 mm thick (16 gauge) galvanized steel 3V type roll formed .
Bushes
Bronze.
Mechanical Linkage
Galvanized steel linkages concealed within the frame.
Axles
12mm square galvanized steel.
Gasket
Foam gasket.
Motor
On/Off
Finish
Mill finish.

Optional Fittings

Screen
Galvanized steel 0.4mm Thick
S-3 SS Bird screen
S-10 SS fly screen
Motor
Modulate / Spring Return
Finish
Available with RAL Powder coating, please specify color.

Features

- Side jambseal provides tight closure.
- AMCA 500 - L
- Low pressure drop.
- Aluminum construction for low maintenance and high resistance to corrosion.
- Linkage concealed within the frame not exposed to weather conditions.

Optional Construction Details

Frame : Thickness up to 3 mm
Frame Depth : Up to 150 mm
Blade : Thickness up to 2 mm
Blade width : Up to 150 mm

B- 50 Series Single skin Blade Model details			
Material Construction			
Model	Frame	Blade	Actuator
MWL-GB-51	GI	GI	On / Off 230V*
MWL-GSB-51	GI	SS	On / Off 230V*
MWL-SB-51	SS	SS	On / Off 230V*

Any Combination of W x H									
MWL-B-51									
Width in Inches	4"	6"	10"	12"	16"	20"	30"	36"	48"
Height in inches	4"	6"	10"	12"	16"	20"	30"	36"	40"

Note: Maximum single module construction - 48" x 40"
Multiple module available with mullion.

Note :
Please contact ***BETEC CAD***. for customized design & additional information.

Selected Products of the company have been Classified / Listed / Tested by various international testing authorities.

Motorized Weather Louver - MWL

B-50 Series

Type : Motorized Louver

Model : MWL-GB-52A; Galvanized Construction.

Blade Type : Aerofoil

BETEC CAD. Manufactures motorized weather louvers are square and rectangular type with parallel operation having Aerofoil type double skin blade design. These louvers are subjected to medium pressure applications to achieve low leakage and uniform air distribution.
The square and rectangular type Motorized louvers are designed for handling maximum air capacities at minimum pressure drop.

MWL-GB-52A

Louver Performance Ratings

Operating Pressure - 4" wg (1000Pa) Max
Velocity - 1500 fpm (7.5 m/s)

Standard Construction

Frame
5.1"x 1" x 18 gauge (130 x 28 x 1.2 mm) rollformed galvanized steel 'C' Channel.
Blades
6" (152mm) wide, 1 mm thick (20 gauge) aluminium extruded.
Bushes
Bronze.
Mechanical Linkage
Galvanized steel linkages concealed within the frame.
Axles
12mm square galvanized steel.
Gasket
Foam gasket.
Motor
On/Off
Finish
Mill finish.

Optional Fittings

Screen
Galvanized steel 0.4mm Thick
S-3 SS Bird screen
S-10 SS fly screen
Motor
Modulate / Spring Return
Finish
Available with RAL Powder coating, please specify color.

Features

- Side jambseal provides tight closure.
- AMCA 500 - L
- Low pressure drop.
- Aluminum construction for low maintenance and high resistance to corrosion.
- Linkage concealed within the frame not exposed to weather conditions.

Optional Construction Details

Frame : Thickness up to 3 mm
Frame Depth : Up to 150 mm
Blade : Thickness up to 2 mm
Blade width : Up to 150 mm

B-50 Series Aerofoil Blade Models details			
Material Construction			
Model	Frame	Blade	Actuator
MWL-GB-52	GI	GI	On / Off 230V*
MWL-GAB-52	GI	AL	On / Off 230V*
MWL-SB-52	SS	SS	On / Off 230V*

Any Combination of W x H									
MWL-B-52									
Width in Inches	4"	6"	10"	12"	16"	20"	30"	36"	48"
Height in inches	4"	6"	10"	12"	16"	20"	30"	36"	40"

Note: Maximum single module construction - 48" x 40"
Multiple module available with mullion.

Note :
Please contact ***BETEC CAD***. for customized design & additional information.

Selected Products of the company have been Classified / Listed / Tested by various international testing authorities.

Motorized Weather Louver - MWL

B-50 Series

Constructional Details

Models : MWL-GB-51 / MWL-GB-52

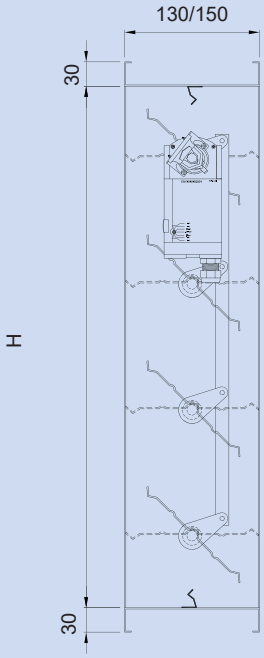

MWL - GB - 51

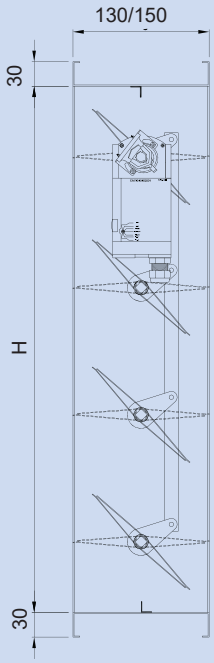

MWL- GAB - 52

Installation Details

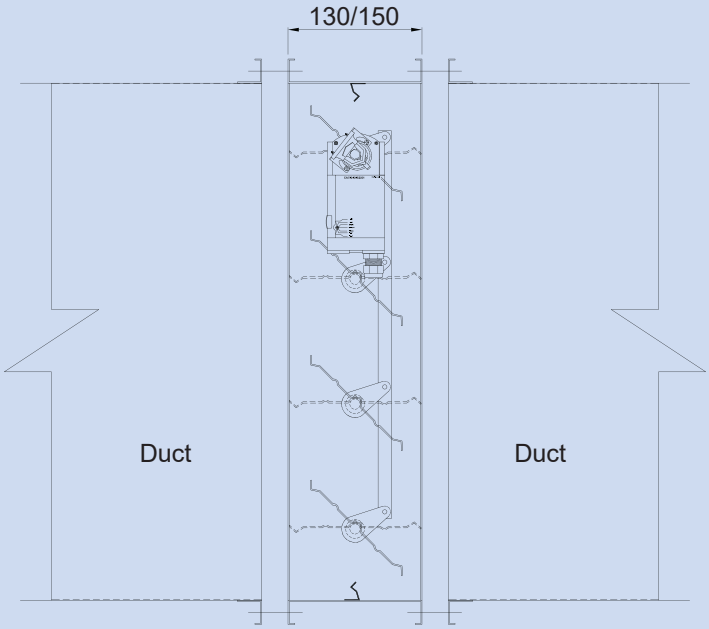

Motorized Weather Louver
Duct mounting Installation

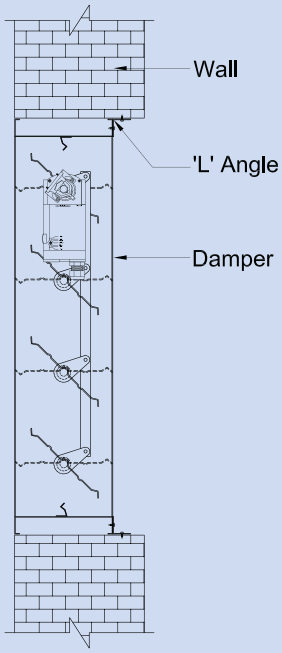

Motorized Weather Louver
Wall mounting Installation

Selected Products of the company have been Classified / Listed / Tested by various international testing authorities.

Motorized Weather Louver - MWL

B-50 Series

Engineering And Performance Data

Models : MWL-GB-51/52A

Pressure Losses Vs Face Velocity

For VCD Models : MWL-GB-51
Single skin 3-V Blade Construction

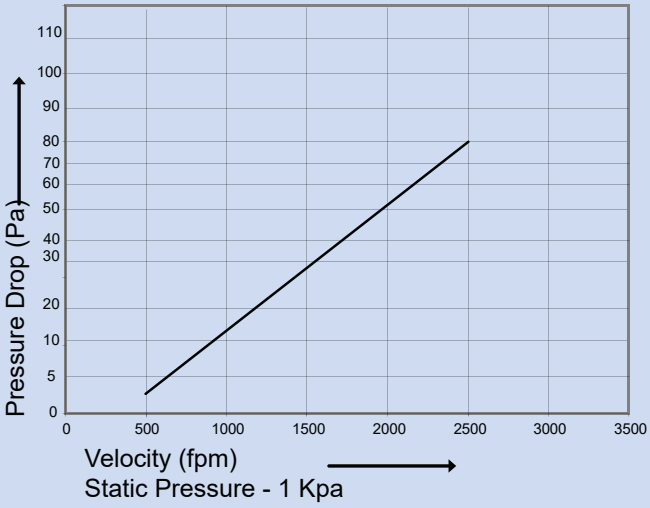

For VCD Models : MWL-GB-52
Aerofoil Blade Construction

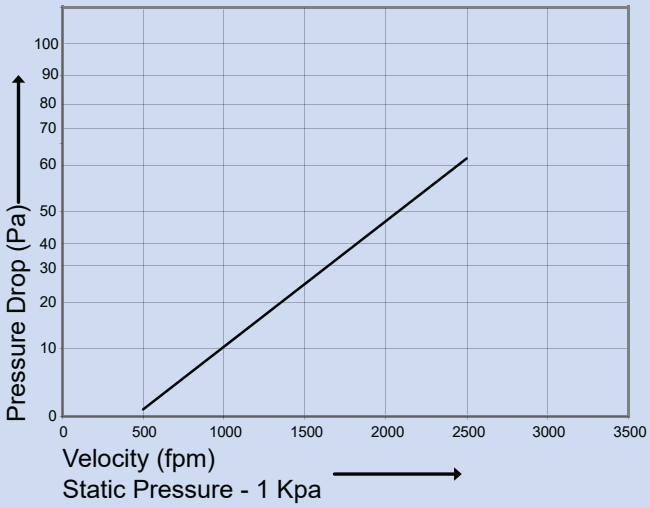

Airflow V/S Pressure Damper 100 % (full) open.					
Max . System Pressure 1000-Pa					
Air Velocity (fpm)	500	1000	1500	2000	2500
MWL-B51-A (3-V Blade single skin) Pressure drop (Pa)	3.2	12.8	28.8	51.2	80
MWL-B52 -A (Aerofoil Blade) Pressure drop (Pa)	2.8	11	25	46	63

Leakage Characteristics

Models : MWL-GB-51/52 - Leakage Curve (Blades 100% Closed Position)

For Models: MWL-B-51/52

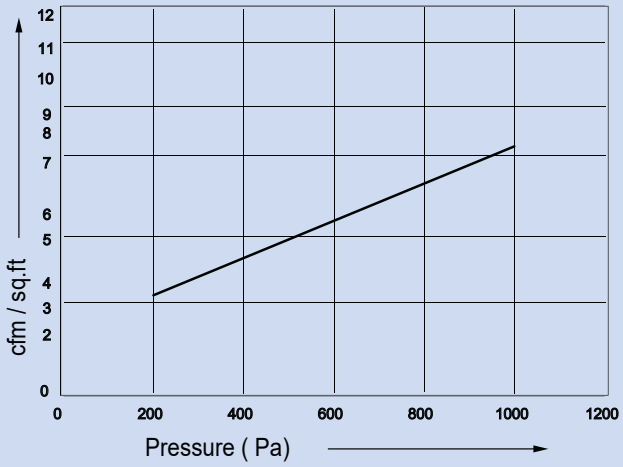

Leakage Ratings on Blades 100 % Closed					
Max . System Pressure	200	400	600	800	1000
For MWL-B-51/52 (Leakage cfm / sq. ft)	15	28	40	55	70

Selected Products of the company have been Classified / Listed / Tested by various international testing authorities.

beteccad.com

© Copyright reserved for ***BETEC CAD.***

"Due to continuous progress and product improvement, ***BETEC CAD.*** reserves the right to make changes without notice"

JULY-2021