TCF
Twin City Fan

INDUSTRIAL PROCESS AND
COMMERCIAL VENTILATION SYSTEMS

CENTRIFUGAL INDUCED FLOW FUME EXHAUST FANS

BAIFE | BCIFE

Overview

BAIFE I BCIFE

BAIFE/BCIFE

AMCA 260 Tested

Model BAIFE & BCIFE is available with UL/cUL 705 listing, for electrical, File No. E158680.

Twin City Fan & Blower certifies that the BAIFE Centrifugal Induced Flow Exhaust Fan herein are licensed to bear the AMCA Seal. The ratings shown are based on test and procedures performance in accordance with AMCA Publication 211 and 311 and comply with the requirements of the AMCA Certified Ratings Program. The AMCA Certified Ratings Seal applies to Induced Flow Fan Air and Sound Performance tested in accordance with AMCA standard 260. See Twin City Fan & Blower Fan Selector© program for sound ratings.

Twin City Fan & Blower offers specially modified versions of the BAF-SW and BC-SW fans designated as BAIFE and BCIFE, respectively for induced flow laboratory fume hood exhaust applications.

The BAIFE and BCIFE fans consist of a single-wide centrifugal unit, a choice of one of four different nozzles and a specially designed windband to maximize dilution ratio (overall outlet volume/lab outlet volume) and plume height.

Available in five (5) arrangements, both belt and direct drive, the BAIFE and BCIFE are capable of generating an induced flow to meet stringent roof exhaust requirements.

Sizes

12.25" to 66.0" impeller diameters

Performance

Airflow to 129,000 CFM
Static pressure to 15" w.g.

Drive Configurations

Belt Driven: Arrangements 1, 9 and 10
Direct Drive: Arrangements 4 and 8

Construction

Class I, II, & III

For complete product performance, drawings and available accessories, download our Fan Selector program at tcf.com.

Application

BAIFE I BCIFE

Application

The BAIFE and BCIFE Induced Flow Exhaust Fans are intended for use in exhausting laboratory fumes and hazardous chemicals in such a manner that diminishes the likelihood of concentrated, contaminant-laden air from being re-entrained into the building's intake or makeup air. This unit is commonly used in exhaust systems for universities, schools, hospitals, research facilities, laboratories and waste water treatment plants.

Induced flow exhaust fans dilute contaminated air at the outlet as well as increase the outlet volume of the fan. This accelerates the discharge air, increasing plume height without a tall stack.

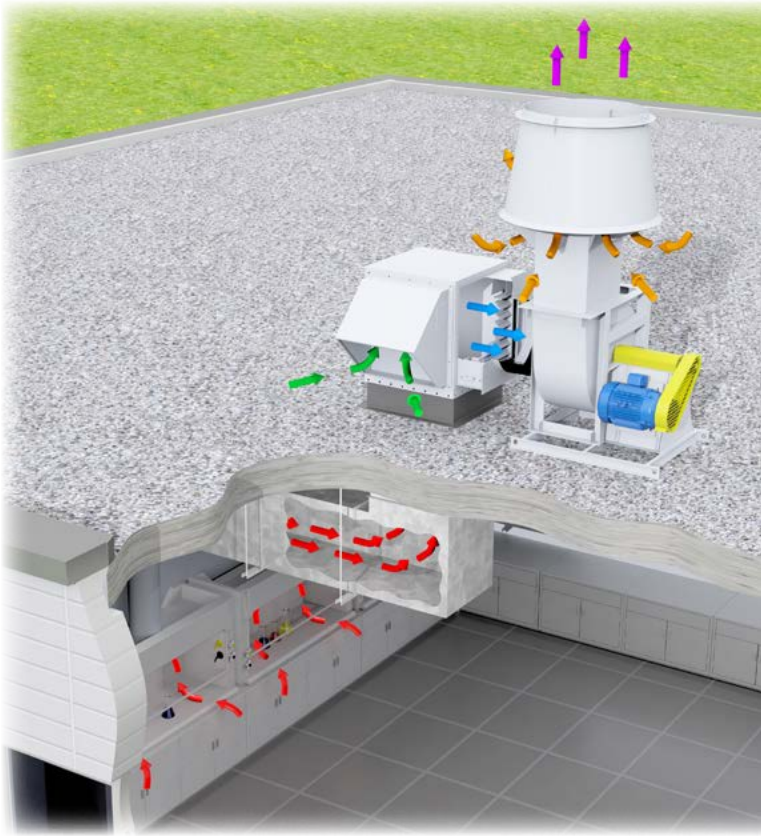

TCF
TWIN CITY FAN

Energy Recovery Systems

Twin City Fan & Blower energy recovery systems for fume exhaust applications combine our line of high efficiency fume exhaust fans with the latest in energy recovery technology. TCF can greatly reduce your energy consumption and carbon footprint while simultaneously increasing your bottom line. Our energy recovery plenums are available in endless configurations to match your specific needs.

TCF's energy recovery systems are designed to extract energy from the conditioned air exiting the laboratory and return the captured energy back into the make-up air unit before it re-enters the building. Energy recovery systems can also be used to pre-cool incoming supply air by removing the heat from the incoming airstream and sending it to the exhaust system.

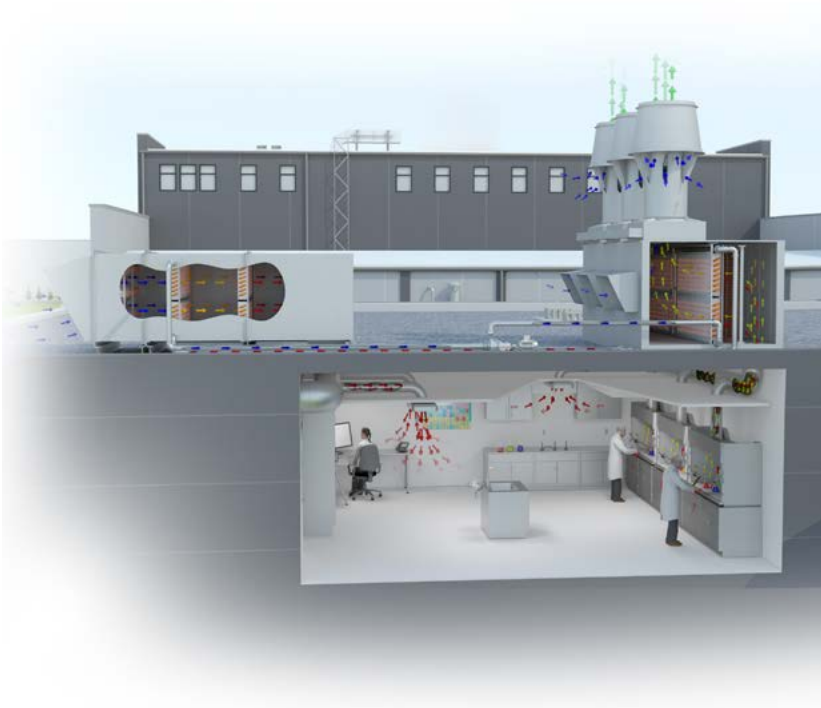

CONSTRUCTION

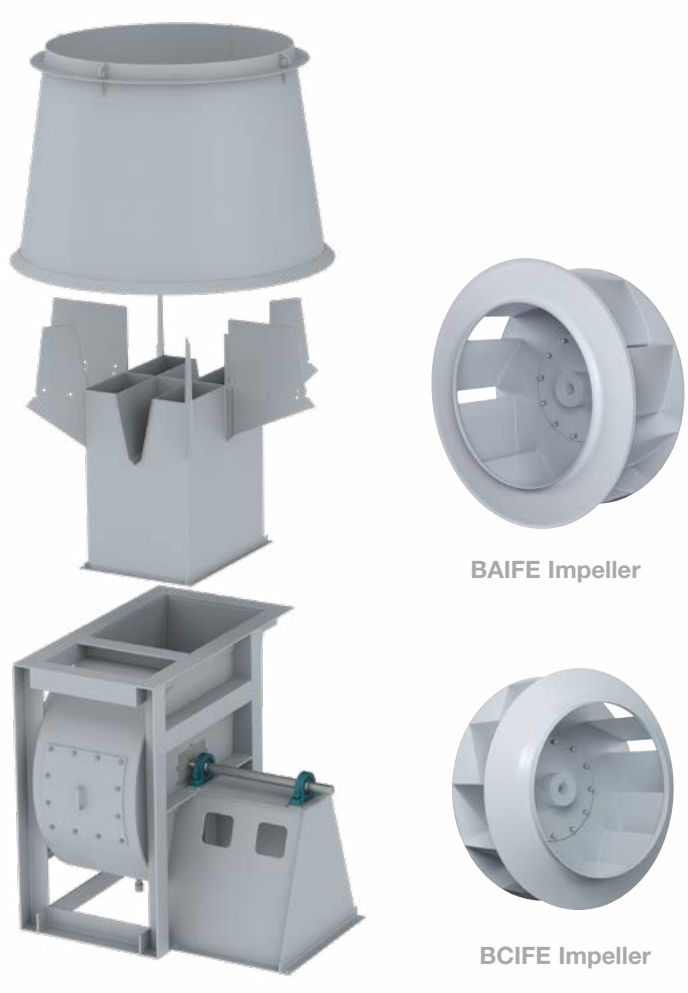

Shaft

Shafts are AISI Grade 1045 hot-rolled steel accurately turned, ground, polished, and ring gauged for accuracy. Shafts are generously sized for a first critical speed of at least 1.43 times the maximum speed for the class.

Shaft Seal

The standard shaft seal reduces leakage and protects the bearings from a contaminated airstream. It is constructed of non-asbestos woven fibrous materials (ceramic felt) compressed between an aluminum cover plate and the fan housing. A ceramic felt shaft seal does not make the fan gas tight. A variety of special seals is available for low leakage applications requiring more positive protection, including mechanical type stuffing boxes.

Drain with Plug

A drain coupling welded to the lowest point of the housing allows drainage of condensate from fan housing.

Impeller Designs

BAIFE airfoil impellers are available in sizes 122 through 165 in aluminum construction only using extruded aluminum blades. Sizes 165 and larger are constructed of steel using die-formed hollow airfoil blades, both sides of the blades continuously welded to the conical spun inlet shroud (rim) and the backplate.

BCIFE impellers are constructed of steel using flat single thickness blades, solid welded to the rim and backplate. Flat blades lend themselves well to high temperature environments or where high humidity or light dust loading may be present.

The use of a conical spun shroud (rim) makes BAIFE/BCIFE fans less susceptible to the performance losses associated with poor inlet conditions. Both impellers are designed for a stable air performance throughout the operating range. The impellers are statically and dynamically balanced to grade BV-3 per AMCA 204 for smooth operation prior to being assembled in the fan, followed by final balance of the entire rotating assembly by Twin City Fan & Blower.

Housing

All fan housings are continuously welded to provide strength and durability for extended service life — a necessity in all commercial and industrial installations. The structural frame of the housing is designed to support the windband and nozzle at cross wind speeds up to 125mph without the use of guy-wires for rigid mounted fans.

Lifting lugs are standard on all fans. Precisely positioned cutoff plates and aerodynamically spun inlet cones provide high efficiency and smooth airflow through the fan.

Nozzle

Located between the fan housing and the windband, the nozzle efficiently increases the speed of the exhaust stream into the windband. The accelerated air entrains surrounding ambient air into the windband diluting the building exhaust.

Bolted Access Door

Impeller area access door for inspection or cleaning of the impeller.

Bearings

For fans with bearings, they are heavy-duty, grease lubricated, spherical roller or adapter mounted anti-friction ball, self-aligning, pillow block type, selected for minimum average bearing life (AFBMA L-10) in excess of 200,000 hours at the maximum fan RPM.

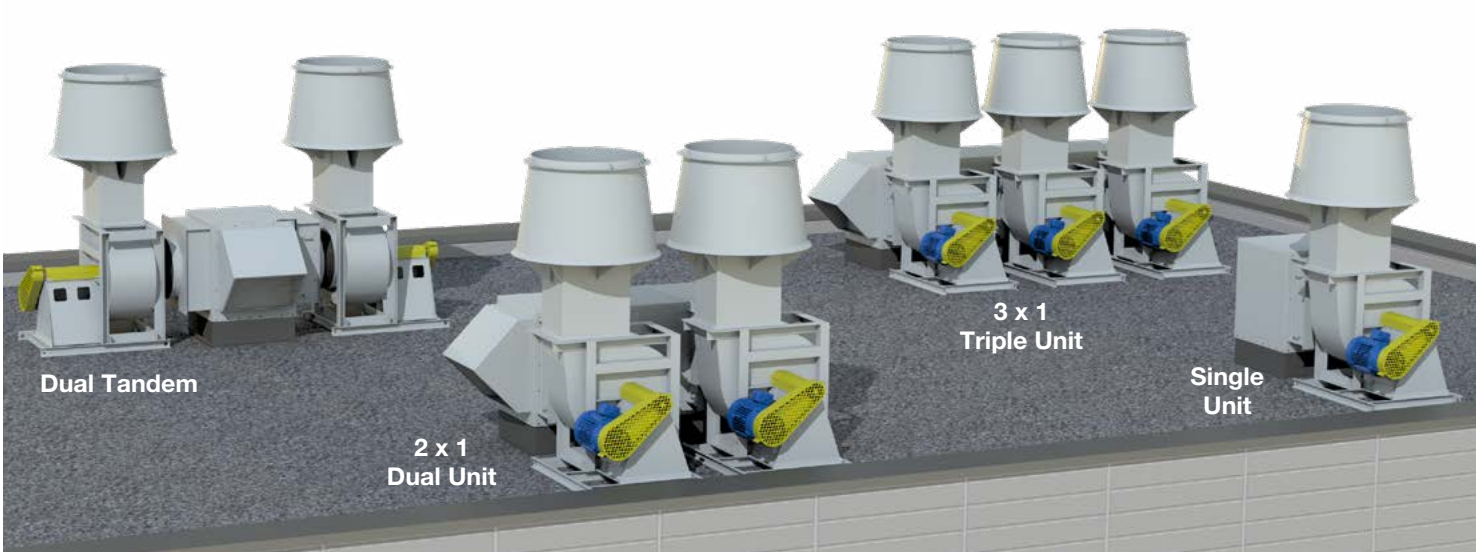

Unique applications require unique configurations. With the Twin City Fan & Blower modular mixing box, multiple configurations are able to be easily created and retrofitted.

TCF
TWIN CITY FAN

OPTIONS/ACCESSORIES

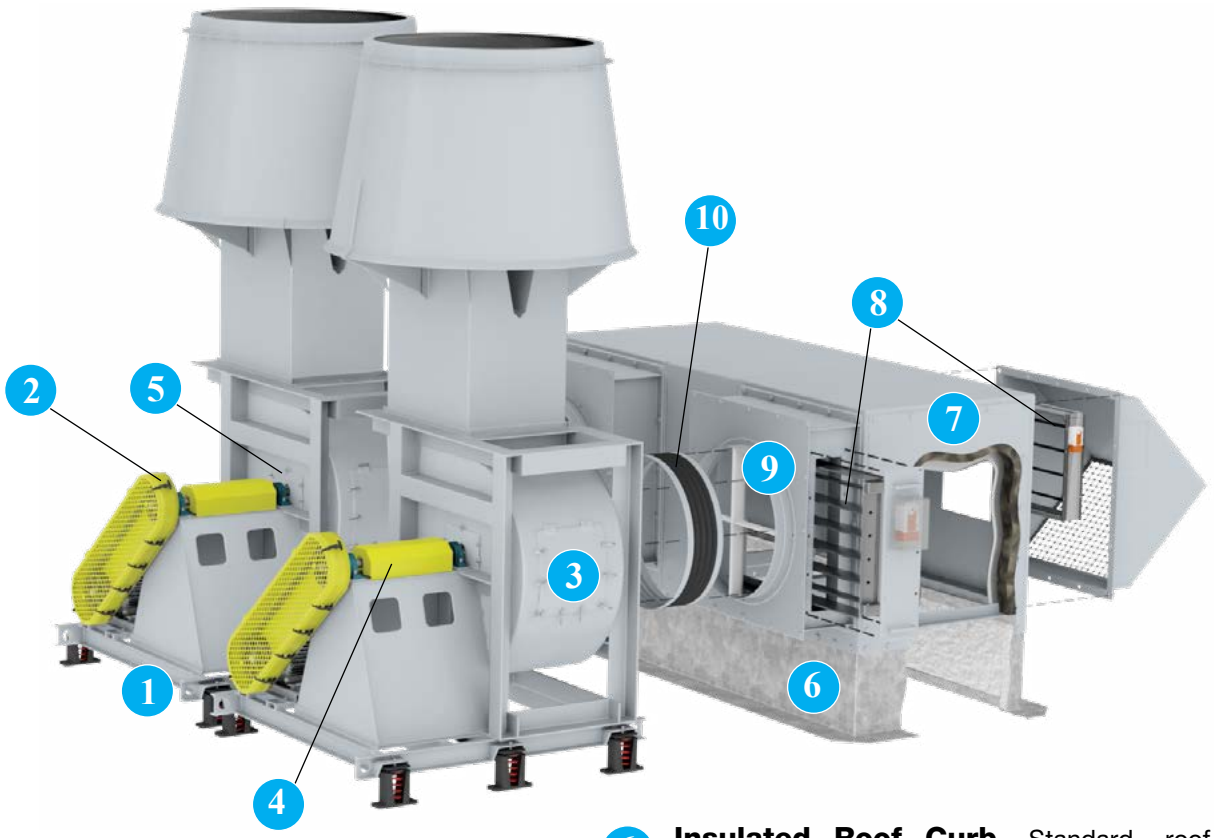

1 **Isolation Base** A structural steel base minimize the transmission of sound vibration from the fan to the building structure and provides common support to fan, motor and drive including guards. This style of base is designed for use with isolators and requires adequate foundation integrity for proper operation. Unitary bases (no springs) and inertia bases (concrete filled) are available.

2 **Belt Guard - Quick Access** Designed to protect personnel from the moving drive parts. OSHA and quick access guards are available.

3 **Quick Open Access Doors** are designed for quick impeller inspection and maintenance. Access doors are specified where examination and cleaning of the fan interior is required.

4 **Exposed Bearing Shaft Guard** Sheet metal guard spanning the shaft between the bearings to provide open access to bearings for lubrication and vibration monitoring. A full guard to cover shaft and bearings is available.

5 **Shaft Seal** Standard on all fans. Special seals are available to suit specific applications.

6 **Insulated Roof Curb** Standard roof curbs are 12" high and are constructed of heavy-duty galvanized steel and include 1$^1/_2$" thick insulation. Contact factory for other roof curb options.

7 **Mixing Plenum Box w/ Weatherhood; Insulated & Bottom Intake** Features stainless steel liner and modular construction to allow for multiple configurations and effortless retrofitting. Multiple construction features, including non-insulated and side intake, are available upon request.

8 **Isolation and Bypass Damper** Isolation dampers are typically used on multi-fan systems to isolate individual fans. Bypass dampers are used to maintain outlet velocities by allowing a constant volume at the fan when exhaust air is reduced. Both dampers are available with controls and various materials of construction and coating options.

9 **Vortex Breaker** Installed in the mixing plenum box at the fan inlet, the vortex breaker minimizes air 'swirl'. Recommended for multi-fan configurations and intakes that are not directly across from the inlet of the fan.

10 **Flex Connector** Located between the mixing plenum box and fan inlet to isolate fan vibration from the users duct work.

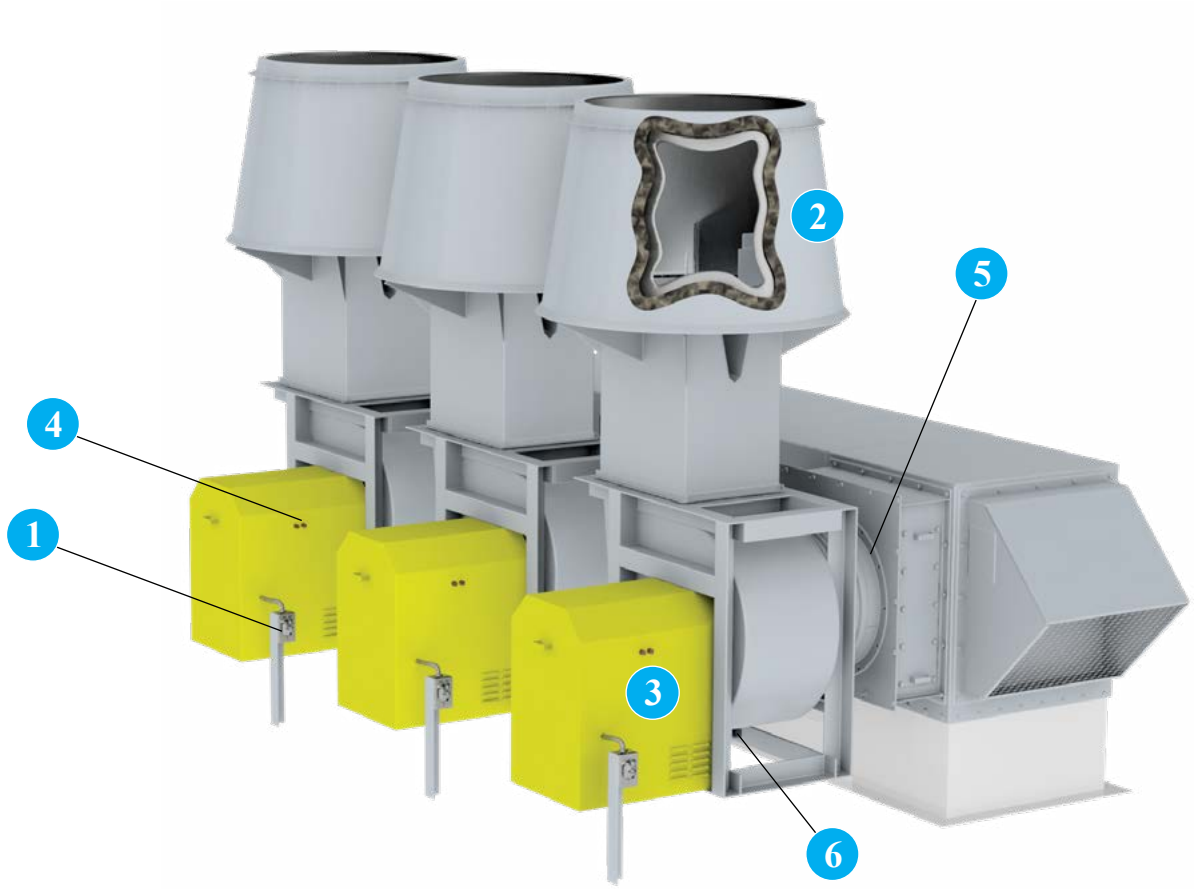

1. **NEMA 3R Disconnect Switch**, rain proof, disconnect is available shipped loose for field mounting and wiring or factory mounted and wired. Also available with a NEMA 4 or 7/9 switch.

2. **Acoustic Windband** Designed to reduce noise of the fan system by attenuating sound at the fan outlet.

3. **Weather Cover (Arrg. 4 & 10 Only)** For outdoor installations, the weather cover completely encloses the motor and V-belt drive from the elements. Provided with slots for ventilation, the cover is easily removable for inspection and maintenance.

4. **Extended Lube Lines** Allow for easy lubrication of bearings on belt driven units without disassembly by extending polyethylene lines from fan bearings to outside of guards or weather covers.

5. **Inlet/ Outlet Flange (Punched)** Punched inlet flanges are available for duct mounting. Punched outlet flanges are welded to the fan outlet for nozzle and windband mounting.

6. **3/4" Drain with Plug** Threaded pipe coupling welded to the lowest point in the housing scroll. All fans come with a weep hole in the bottom of the housing as standard.

OTHER ACCESSORIES:

- Piezometer Ring & Transducers
- Insulation Pins
- Insulated Housing
- Shaft & Bearing Guard
- Inlet Safety Screen
- Bolted Access Door

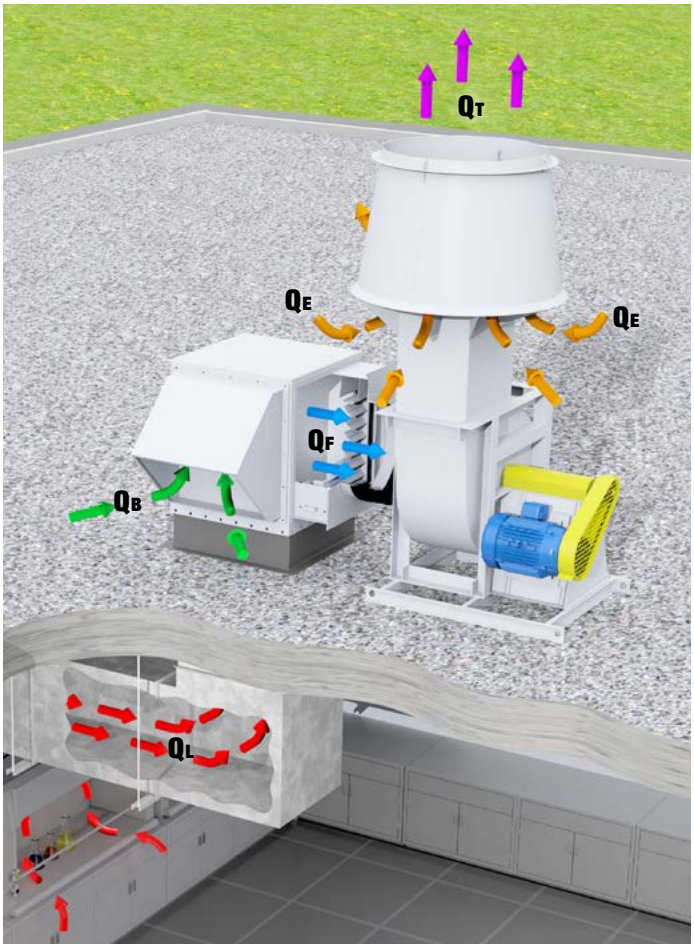

Q_B = Bypass Flow
Q_E = Entrained Flow
Q_F = Fan Flow
Q_L = Laboratory Flow (Contaminated Air)
Q_T = Total Flow

$$Q_T = Q_E + Q_F$$
$$Q_F = Q_B + Q_L$$

$$\therefore Q_T = Q_E + Q_B + Q_L$$

$$\text{Dilution Ratio} = \text{D.R.} = \frac{Q_T}{Q_L}$$

$$\text{Entrainment Ratio} = \text{E.R.} = \frac{Q_T}{Q_F}$$

Bypass Air
Ambient air that is drawn through the bypass air plenum and mixed with the lab exhaust to increase dilution and plume rise. Bypass air is primarily used in variable volume applications to maintain a constant discharge volume but can also be used to increase overall exhaust volume and dilution. (See diagram to left.)

Dilution Ratio
The ratio of the total fan outlet volume to the lab exhaust volume. (Total Volume/Lab Exhaust Volume). Value includes any additional bypass air in the calculation. (See diagram to left.)

Entrainment Air
Air that is entrained (induced flow) through the windband and fan housing, mixed with the laboratory exhaust to increase the dilution ratio and plume rise. (See diagram to left.)

Entrainment Ratio
The ratio of the total fan outlet volume to the fan inlet volume. (Total Volume/Fan Inlet Volume - see diagram to left.)

Nozzle
Device located internal to the fan housing, providing fume exhaust air to accelerate upon entrance to the windband. Several nozzles per fan size are available on the BAIFE and BCIFE; low-velocity, medium-velocity, high-velocity and extra-high-velocity. Each nozzle provides different flow characteristics. Nozzle should be selected based on the application requirements.

Plume Rise
The height of the fume exhaust and entrainment air above the discharge of the windband. (See page 5 for diagram and calculations.)

Plume Height
Overall height of the discharge plume rise, plus the added height of the exhaust system above the roofdeck level. (See page 5 for diagram and calculations.)

Total Airflow
The total airflow exiting the windband, including fume exhaust, bypass air, and entrainment air. (See diagram to left.)

Windband
Device used to direct the fume exhaust as it leaves the housing of the exhaust fan and entrain dilution air.

The following illustrations describe the procedure for determining the total laboratory exhaust fan discharge flow. The total discharge flow is the sum of inlet airflow and entrained airflow. The key requirement to AMCA 260 is the variable resistance box. This box allows the measurement of total discharge flow (Ps = 0 in. w.g. to simulate discharging the fan to atmosphere) at all points along its fan curve.

Without the variable resistance box, the entrained airflow can only be measured at the free air point of its fan curve. The entrained airflow obtained can be used to calculate an effective plume height. Therefore, AMCA 260 certification is necessary to ensure the laboratory exhaust fan specified is providing the plume rise and entrainment submitted.

AMCA 210 - Figure 15

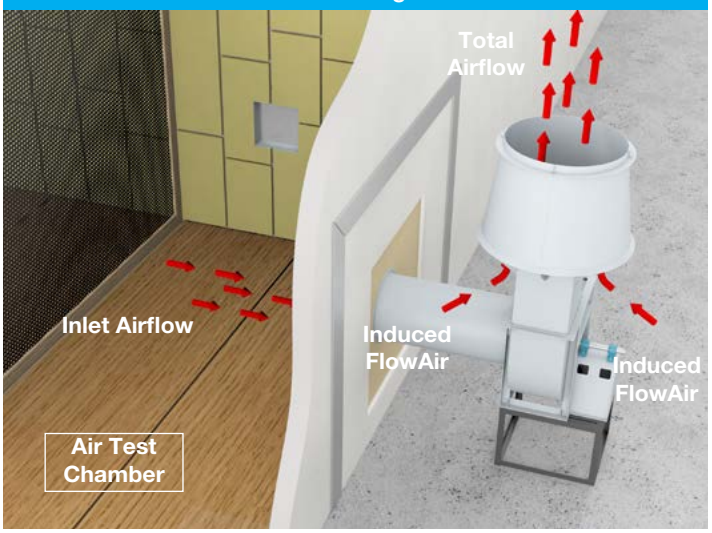

AMCA 260 - Figure 1

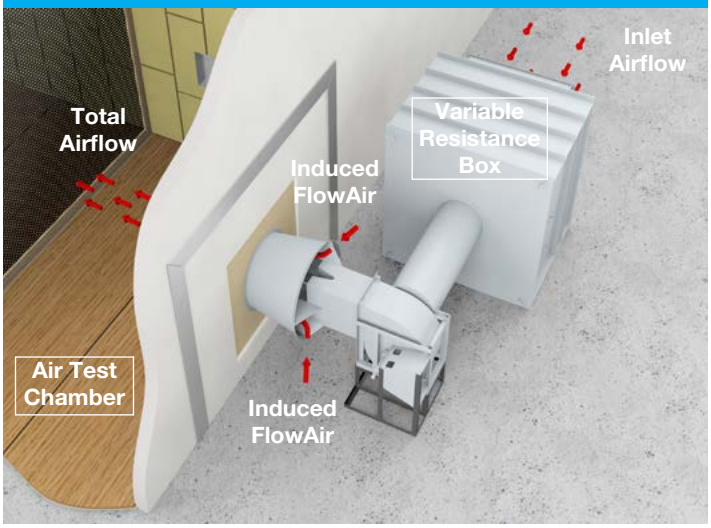

PLUME HEIGHT CALCULATION

$h_e = h_r + h_s$*
$h_e = [3.0 \times (V \times d/U)] + h_s$

h_e = Effective plume height (ft)
h_r = Plume rise (ft)
h_s = Stack height (height from roof to outlet of windband) (ft)
V = Windband exit velocity (ft/min)
d = Windband outlet diameter (ft)
U = Crosswind speed (ft/min)

* Equation taken from ASHRAE Laboratory Design Guide, Equation 9-2. Note: Plume height calculations are typically calculated with a 10 mph (880 ft/min) crosswind.

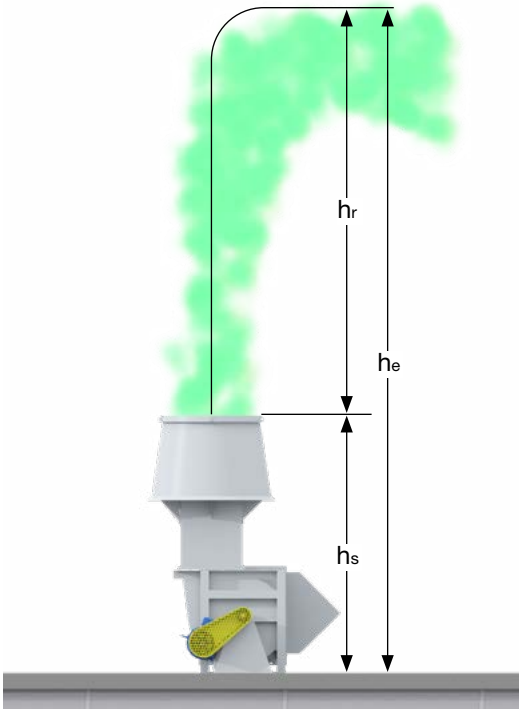

Arrangement 1
SWSI — Single Width, Single Inlet

Arrangement 1 is belt driven. The impeller is overhung on the shaft, i.e., mounted at the end of the shaft. The motor can be mounted in any of the AMCA standard motor positions, X or Y. The two fan bearings are mounted on the bearing pedestal, out of the airstream, which makes them ideal for high temperature or contaminated air applications. Belt driven configurations offer performance flexibility.

Arrangement 4
SWSI — Single Width, Single Inlet

Arrangement 4 is a direct drive fan. The impeller is mounted directly to the motor shaft with the motor mounted to a pedestal. Arrangement 4 offers low maintenance since there are no fan bearings, fan shaft or drive parts to maintain. Arrangement 4 fans are limited up to size 365.

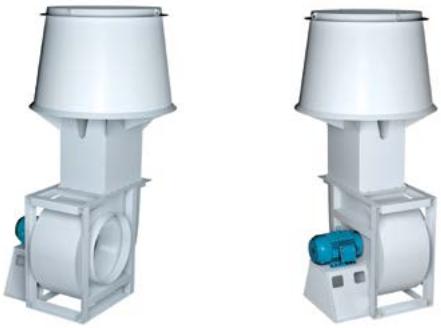

Arrangement 8
SWSI — Single Width, Single Inlet

Arrangement 8 is a modified version of Arrangement 1 used for direct drive. The Arrangement 1 bearing pedestal is extended to accommodate the motor. A flexible coupling connects the fan and motor shaft. Arrangement 8 fans are available on Size 402 and larger.

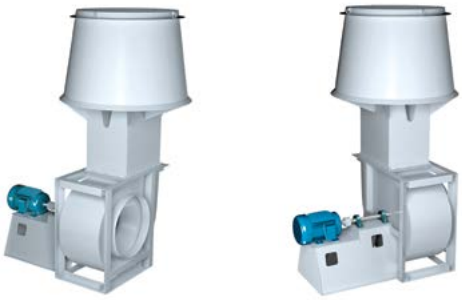

Arrangement 9
SWSI — Single Width, Single Inlet

Arrangement 9 is available as belt driven only. A motor slide base is mounted on the side of the bearing pedestal. This arrangement permits the unit to ship as a complete assembly with the motor and drive mounted. Typically, the motor is mounted on the left side of the pedestal for CW rotation fans and on the right side for CCW rotation fans.

Arrangement 10
SWSI — Single Width, Single Inlet

Arrangement 10 is available as belt driven only. For Class I and II fans, sizes 122 through 365, Arrangement 10 units are commonly referred to as Ventilating Sets. (Refer to Catalog 600 for more details.) Arrangement 10 units have adjustable motor bases mounted inside the bearing pedestal. This arrangement offers a more compact design than the Arrangement 9 and is suitable for roof or outdoor installations when supplied with the optional weather cover.

Table 1. BAIFE Maximum RPM, Impeller Weights, and WR² (moment of inertia in lb-ft²)

FAN SIZE	CLASS I			CLASS II			CLASS III		
	MAX. RPM	WEIGHT LB.	WR² LB-FT²	MAX. RPM	WEIGHT LB.	WR² LB-FT²	MAX. RPM	WEIGHT LB.	WR² LB-FT²
122	3990	9	0.97	5205	9	0.97	–	–	–
135	3265	10	1.4	4259	10	1.4	–	–	–
150	3260	14	2.12	4252	14	2.12	–	–	–
165	2673	16	3.23	3487	17	4.04	–	–	–
182	2294	34	9.75	2902	39	10.8	3701	54	14.2
200	2093	41	13.9	2648	45	15.3	3377	64	20.2
222	1881	69	25.7	2381	69	25.7	3036	86	32.7
245	1708	81	38.3	2162	80	38.3	2757	111	51.9
270	1558	89	52.4	1999	89	52.4	2549	128	75.1
300	1402	108	82.5	1799	119	95	2294	149	113
330	1275	131	121	1636	160	149	2085	187	183
365	1071	173	204	1388	206	246	1760	265	319
402	971	213	300	1258	243	361	1596	299	435
445	878	303	476	1138	365	627	1444	408	677
490	797	348	683	1033	423	906	1311	474	980
542	720	443	1142	933	537	1384	1184	605	1582
600	651	570	1855	844	635	2055	1071	722	2349
660	592	832	2862	767	881	3153	973	1004	3721

Mixing Box Weights

FAN SIZE	BOTTOM INTAKE (LBS.)	SIDE INTAKE (LBS.)
122	244	239
135	262	255
150	296	288
165	312	301
182	347	338
200	384	375
222	417	408
245	479	469
270	517	506
300	590	578
330	661	648
365	756	743
402	861	846
445	975	959
490	1127	1109
542	1301	1282
600	1510	1489
660	1732	1710

Table 2. BCIFE Maximum RPM, Impeller Weights, and WR² (moment of inertia in lb-ft²)

FAN SIZE	CLASS I			CLASS II			CLASS III		
	MAX. RPM	WEIGHT LB.	WR² LB-FT²	MAX. RPM	WEIGHT LB.	WR² LB-FT²	MAX. RPM	WEIGHT LB.	WR² LB-FT²
122	3167	15	1.7	4119	15	1.7	5208	22	2.4
135	2874	17	2.4	3738	18	2.7	4726	27	3.9
150	2587	20	3.7	3364	21	4.1	4253	31	5.8
165	2352	24	5.7	3058	28	7	3867	38	8.4
182	2118	31	8.8	2729	39	10.8	3473	53	13.9
200	1932	38	12.5	2490	49	17.4	3169	63	19.8
222	1737	66	23.6	2238	74	28.8	2848	85	32
245	1577	81	38.3	2033	87	42.9	2587	110	50.9
270	1397	94	56.4	1803	103	64.6	2287	132	79.2
300	1257	113	88.8	1623	125	101	2059	172	139
330	1143	151	149	1475	167	158	1871	215	221
365	995	198	245	1283	214	260	1727	273	288
402	903	244	361	1163	254	382	1566	301	437
445	817	340	566	1052	392	692	1416	412	681
490	742	393	816	956	455	1001	1286	478	985
542	670	461	1209	863	542	1392	1162	604	1570
600	606	593	1954	780	642	2066	1050	793	2647
660	551	859	3008	710	975	3629	955	1068	4034

Windband Weights

FAN SIZE	WINDBAND (LBS.)
122	69
135	82
150	100
165	86
182	133
200	164
222	199
245	238
270	267
300	323
330	388
365	471
402	563
445	684
490	825
542	997
600	1214
660	1463

Table 3. BAIFE and BCIFE Shaft & Bearings

FAN SIZE	CLASS I						CLASS II						CLASS III			
	ARR. 1 & 9		ARR. 8		ARR. 10		ARR. 1 & 9		ARR. 8		ARR. 10		ARR. 1 & 9		ARR. 8	
	SHFT DIA.	BRG TYPE	SHFT DIA.	BRG TYPE	SHFT DIA.	BRG TYPE	SHFT DIA.	BRG TYPE	SHFT DIA.	BRG TYPE	SHFT DIA.	BRG TYPE	SHFT DIA.	BRG TYPE	SHFT DIA.	BRG TYPE
122	1	SDB	1	SDB	1	SDB	1	HDB *(SDB)*	1	SDB	1-3/16	SDB	–	–	–	–
135	1	SDB	1	SDB	1	SDB	1	HDB	1	SDB	1-3/16	SDB	–	–	–	–
150	1	SDB	1	SDB	1	SDB	1-3/16	HDB *(SDB)*	1	HDB	1-3/16	HDB *(SDB)*	–	–	–	–
165	1	SDB	1	SDB	1	SDB	1-3/16	HDB	1	HDB	1-3/16	HDB *(SDB)*	–	–	–	–
182	1-3/16	SDB	1	SDB	1-3/16	SDB	1-7/16	HDB	1	HDB	1-7/16	HDB	2-3/16	HDB	1-7/16	HDB
200	1-7/16	SDB	1	SDB	1-7/16	SDB	1-7/16	HDB	1	HDB	1-7/16	HDB	2-3/16 *(2-7/16)*	HDB	1-7/16	HDB
222	1-7/16	SDB	1	SDB	1-7/16	SDB	1-15/16	HDB	1-3/16	HDB	1-7/16	HDB	2-7/16	HDB	1-15/16 *(1-11/16)*	HDB
245	1-7/16	SDB	1-3/16	SDB	1-7/16	SDB	1-15/16 *(2-3/16)*	HDB	1-3/16	HDB	1-15/16	HDB	2-7/16 *(2-11/16)*	HDB	1-15/16	HDB
270	1-11/16	SDB	1-3/16	SDB	1-7/16	SDB	2-3/16	HDB	1-7/16	HDB	1-15/16	HDB	2-15/16	HDB	2-3/16 *(1-11/16)*	HDB *(RB)*
300	1-15/16	HDB	1-3/16	HDB	1-15/16	HDB	2-3/16	HDB	1-7/16	HDB	2-3/16	HDB	2-7/16	RB	1-11/16	RB
330	1-15/16	HDB	1-7/16	SDB	1-15/16	HDB	2-7/16	HDB	1-11/16 *(1-15/16)*	HDB	2-7/16 *(2-3/16)*	HDB	2-11/16	RB	1-15/16	RB
365	1-15/16	HDB	1-11/16	SDB	1-15/16	HDB	2-7/16	HDB	2-3/16	HDB	2-7/16	HDB	2-11/16	RB	1-15/16	RB
402	2-3/16	HDB	1-15/16	HDB	2-3/16	HDB	2-7/16	RB	2-3/16	HDB	2-7/16	RB	2-15/16	RB	2-3/16	RB
445	2-7/16	HDB	2-3/16	HDB	2-7/16	HDB	2-11/16	RB	2-7/16	HDB	2-11/16	RB	3-7/16	RB	2-7/16	RB
490	2-11/16	HDB	2-7/16	HDB	2-11/16	HDB	2-15/16	RB	2-3/16	RB	2-15/16	RB	3-7/16	RB	2-7/16	RB
542	2-15/16	HDB	2-11/16	HDB	2-15/16	HDB	3-7/16	RB	2-7/16	RB	3-7/16	RB	3-15/16	RB	3-7/16	RB
600	2-15/16	HDB	2-11/16	RB	2-15/16	HDB	3-7/16	RB	2-11/16	RB	3-7/16	RB	4-7/16	SRB	3-7/16	RB
660	3-7/16	RB	2-15/16	RB	–	RB	3-15/16	RB	3-7/16	RB	–	–	4-7/16	SRB	3-7/16	RB

Note: Italicized values within the parenthesis are for BCIFE. Other value is for BAIFE. Where only one value exists, sizes and bearings types are the same between BAIFE and BCIFE.

Table 4. Arr. 1 BAIFE Bare Fan Weights (Lbs.)

FAN	CLASS I				CLASS II				CLASS III			
SIZE	HV	LV	MV	XV	HV	LV	MV	XV	HV	LV	MV	XV
122	303	271	302	304	303	271	302	304	-	-	-	-
135	363	349	351	354	364	350	352	355	-	-	-	-
150	423	418	421	424	426	421	424	427	-	-	-	-
165	469	464	467	471	475	469	472	476	-	-	-	-
182	667	661	665	691	678	672	676	702	697	691	695	721
200	786	778	782	813	797	789	793	824	833	825	829	860
222	984	974	980	1018	992	982	988	1026	1028	1018	1023	1062
245	1242	1230	1237	1283	1253	1241	1248	1294	1311	1298	1305	1352
270	1398	1398	1407	1464	1407	1407	1416	1473	1470	1470	1478	1535
300	1658	1640	1650	1721	1677	1659	1669	1740	1740	1722	1732	1803
330	2130	2109	2121	2208	2156	2134	2147	2233	2213	2191	2203	2290
365	2541	2515	2530	2636	2577	2551	2566	2672	2626	2599	2615	2720
402	3032	2676	3018	3147	3053	2697	3039	3168	3125	2769	3111	3241
445	4231	4193	4215	4373	4297	4258	4280	4439	4404	4365	4387	4546
490	4980	4933	4960	5153	5057	5010	5037	5229	5198	5151	5178	5370
542	5985	5928	5961	6197	6104	6047	6079	6316	6338	6281	6314	6550
600	7130	7060	7100	7390	7209	7139	7179	7469	7594	7524	7564	7854
660	8579	8495	8543	8894	8742	8658	8706	9057	9090	9006	9054	9405

Table 5. Arr. 4 BAIFE Bare Fan Weights (Lbs.)

FAN	CLASS I				CLASS II			
SIZE	HV	LV	MV	XV	HV	LV	MV	XV
122	312	280	280	313	312	280	280	313
135	380	365	365	370	381	366	366	371
150	432	428	428	434	433	429	429	435
165	505	499	499	506	509	503	503	510
182	723	718	718	747	731	726	726	755
200	844	836	836	871	855	847	847	882
222	1029	1019	1019	1063	1037	1027	1027	1071
245	1246	1233	1233	1287	1252	1239	1239	1293
270	1398	1398	1398	1464	1407	1407	1407	1473
300	1642	1624	1624	1705	1654	1636	1636	1717
330	2139	2117	2117	2216	2155	2133	2133	2232
365	2545	2519	2519	2640	2561	2535	2535	2656

Table 6. Arr. 9 BAIFE Bare Fan Weights (Lbs.)

FAN	CLASS I				CLASS II				CLASS III			
SIZE	HV	LV	MV	XV	HV	LV	MV	XV	HV	LV	MV	XV
122	348	340	347	349	348	340	347	349	-	-	-	-
135	428	408	416	419	429	409	417	420	-	-	-	-
150	480	471	478	481	483	475	481	484	-	-	-	-
165	523	515	520	524	529	522	527	531	-	-	-	-
182	740	728	738	764	753	741	751	777	776	764	775	800
200	875	858	872	902	886	869	883	913	931	914	928	959
222	1058	1045	1054	1092	1066	1053	1062	1100	1110	1097	1106	1144
245	1337	1326	1332	1379	1349	1338	1344	1391	1416	1405	1411	1457
270	1489	1490	1497	1554	1498	1499	1506	1563	1571	1572	1579	1637
300	1750	1729	1742	1813	1762	1741	1754	1825	1837	1816	1829	1900
330	2194	2177	2185	2271	2220	2202	2210	2297	2288	2270	2279	2365
365	2655	2633	2644	2750	2692	2669	2680	2786	2762	2740	2751	2857
402	3104	3081	3090	3219	3124	3102	3111	3240	3232	3210	3219	3348
445	4360	4338	4343	4502	4425	4403	4409	4567	4572	4551	4556	4714
490	5079	5059	5059	5252	5156	5136	5136	5328	5208	5188	5188	5381
542	6112	6088	6088	6324	6231	6206	6206	6442	6508	6484	6484	6720
600	7231	7201	7201	7491	7317	7287	7287	7577	7734	7704	7704	7993
660	8661	8625	8625	8976	8824	8789	8789	9139	9200	9164	9164	9515

Table 7. Arr. 10 BAIFE Bare Fan Weights (Lbs.)

FAN	CLASS I				CLASS II			
SIZE	HV	LV	MV	XV	HV	LV	MV	XV
122	327	295	295	328	330	299	299	331
135	392	378	378	383	397	383	383	388
150	447	442	442	448	452	447	447	454
165	505	500	500	507	502	496	496	504
182	709	704	704	733	725	720	720	749
200	817	809	809	845	836	828	828	863
222	1008	998	998	1042	1021	1011	1011	1055
245	1222	1210	1210	1263	1239	1227	1227	1280
270	1362	1362	1362	1428	1383	1383	1383	1449
300	1589	1571	1571	1652	1604	1586	1586	1667
330	2043	2021	2021	2120	2075	2053	2053	2152
365	2433	2407	2407	2528	2470	2444	2444	2565
402	2898	2542	2542	3014	2918	2561	2561	3033
445	4058	4019	4019	4200	4130	4091	4091	4272
490	4751	4703	4703	4923	4824	4777	4777	4997
542	5683	5626	5626	5895	5796	5739	5739	6008
600	6742	6672	6672	7002	6823	6753	6753	7083

Table 8. Arr. 1 BCIFE Bare Fan Weights (Lbs.)

FAN	CLASS I				CLASS II				CLASS III			
SIZE	HV	LV	MV	XV	HV	LV	MV	XV	HV	LV	MV	XV
122	303	271	302	304	306	274	305	307	-	-	-	-
135	363	349	351	354	364	350	352	355	-	-	-	-
150	423	418	421	424	426	421	424	427	-	-	-	-
165	469	464	467	471	475	469	472	476	-	-	-	-
182	667	661	665	691	678	672	676	702	697	691	695	721
200	786	778	782	813	797	789	793	824	821	813	817	848
222	984	974	980	1018	992	982	988	1026	1015	1005	1010	1049
245	1242	1230	1237	1283	1253	1241	1248	1294	1291	1278	1285	1332
270	1398	1398	1407	1464	1407	1407	1416	1473	1450	1450	1458	1515
300	1658	1640	1650	1721	1677	1659	1669	1740	1740	1722	1732	1803
330	2130	2109	2121	2208	2156	2134	2147	2233	2223	2201	2213	2300
365	2541	2515	2530	2636	2577	2551	2566	2672	2647	2620	2636	2741
402	3032	2676	3018	3147	3053	2697	3039	3168	3128	2772	3114	3244
445	4231	4193	4215	4373	4297	4258	4280	4439	4370	4331	4353	4512
490	4980	4933	4960	5153	5057	5010	5037	5229	5135	5088	5115	5307
542	5985	5928	5961	6197	6104	6047	6079	6316	6211	6154	6187	6423
600	7130	7060	7100	7390	7209	7139	7179	7469	7480	7410	7450	7740
660	8579	8495	8543	8894	8742	8658	8706	9057	8908	8824	8872	9223

Table 9. Arr. 4 BCIFE Bare Fan Weights (Lbs.)

FAN	CLASS I				CLASS II			
SIZE	HV	LV	MV	XV	HV	LV	MV	XV
122	312	280	280	313	315	283	283	316
135	380	365	365	370	381	366	366	371
150	432	428	428	434	433	429	429	435
165	505	499	499	506	509	503	503	510
182	723	718	718	747	731	726	726	755
200	844	836	836	871	855	847	847	882
222	1029	1019	1019	1063	1037	1027	1027	1071
245	1246	1233	1233	1287	1252	1239	1239	1293
270	1398	1398	1398	1464	1407	1407	1407	1473
300	1642	1624	1624	1705	1654	1636	1636	1717
330	2139	2117	2117	2216	2155	2133	2133	2232
365	2545	2519	2519	2640	2561	2535	2535	2656

Table 10. Derating Factors For High Temperature (BCIFE Only)

TEMP	CLASS I	CLASS II
70	1	1
200	0.99	0.95
250	0.98	0.93
300	0.98	0.91
400	0.96	0.88
500	0.93	0.84
600	0.9	0.81
700	0.8	0.78
800	0.6	0.75

Table 11. Arr. 9 BCIFE Bare Fan Weights (Lbs.)

FAN	CLASS I				CLASS II				CLASS III			
SIZE	HV	LV	MV	XV	HV	LV	MV	XV	HV	LV	MV	XV
122	348	340	347	349	351	343	350	352	364	356	362	365
135	428	408	416	419	429	409	417	420	449	428	437	439
150	480	471	478	481	483	475	481	484	507	499	505	509
165	523	515	520	524	529	522	527	531	553	545	550	554
182	740	728	738	764	753	741	751	777	776	764	775	800
200	875	858	872	902	886	869	883	913	919	902	916	947
222	1058	1045	1054	1092	1066	1053	1062	1100	1097	1084	1093	1131
245	1337	1326	1332	1379	1349	1338	1344	1391	1396	1385	1391	1437
270	1489	1490	1497	1554	1498	1499	1506	1563	1551	1552	1559	1617
300	1750	1729	1742	1813	1762	1741	1754	1825	1837	1816	1829	1900
330	2194	2177	2185	2271	2220	2202	2210	2297	2298	2280	2289	2375
365	2655	2633	2644	2750	2692	2669	2680	2786	2783	2761	2772	2878
402	3104	3081	3090	3219	3124	3102	3111	3240	3235	3213	3222	3351
445	4360	4338	4343	4502	4425	4403	4409	4567	4538	4517	4522	4680
490	5079	5059	5059	5252	5156	5136	5136	5328	5145	5125	5125	5318
542	6112	6088	6088	6324	6231	6206	6206	6442	6381	6357	6357	6593
600	7231	7201	7201	7491	7317	7287	7287	7577	7620	7590	7590	7879
660	8661	8625	8625	8976	8824	8789	8789	9139	9018	8982	8982	9333

Table 12. Arr. 10 BCIFE Bare Fan Weights (Lbs.)

FAN	CLASS I				CLASS II			
SIZE	HV	LV	MV	XV	HV	LV	MV	XV
122	327	295	295	328	333	302	302	334
135	392	378	378	383	397	383	383	388
150	447	442	442	448	452	447	447	454
165	505	500	500	507	502	496	496	504
182	709	704	704	733	725	720	720	749
200	817	809	809	845	836	828	828	863
222	1008	998	998	1042	1021	1011	1011	1055
245	1222	1210	1210	1263	1239	1227	1227	1280
270	1362	1362	1362	1428	1383	1383	1383	1449
300	1589	1571	1571	1652	1604	1586	1586	1667
330	2043	2021	2021	2120	2075	2053	2053	2152
365	2433	2407	2407	2528	2470	2444	2444	2565
402	2898	2542	2542	3014	2918	2561	2561	3033
445	4058	4019	4019	4200	4130	4091	4091	4272
490	4751	4703	4703	4923	4824	4777	4777	4997
542	5683	5626	5626	5895	5796	5739	5739	6008
600	6742	6672	6672	7002	6823	6753	6753	7083

TCF
TWIN CITY FAN

122 BAIFE

Impeller Type: Airfoil **Max Class I RPM = 3990** **Windband Outlet Area: 1.80 ft²**
Impeller Dia.: 12.25" **Max Class II RPM = 4600** **Tip Speed FPM = 3.21 x RPM**

LV (Low Velocity Nozzle)

Nozzle Outlet Area: 0.537 ft²

FAN INLET CFM	NOZ-ZLE OV	0.5" SP			1" SP			2" SP			3" SP			4" SP			5" SP			6" SP			7" SP		
		RPM	BHP	OUT FLOW	RPM	BHP	OUT FLOW	RPM	BHP	OUT FLOW	RPM	BHP	OUT FLOW	RPM	BHP	OUT FLOW	RPM	BHP	OUT FLOW	RPM	BHP	OUT FLOW	RPM	BHP	OUT FLOW
625	**1164**	1292	0.09	1147	1560	0.16	1175	2008	0.33	1267															
1000	**1862**	1726	0.20	1804	1955	0.30	1822	2319	0.52	1859	2628	0.76	1898	2914	1.02	1954	3182	1.31	2020						
1375	**2561**	2202	0.38	2468	2393	0.52	2481	2721	0.82	2509	2995	1.11	2536	3240	1.42	2560	3467	1.75	2588	3684	2.09	2622	3893	2.45	2662
1750	**3259**	2703	0.68	3129	2863	0.86	3149	3150	1.22	3160	3406	1.59	3187	3634	1.97	3211	3839	2.34	3228	4034	2.73	3249	4219	3.14	3270
2125	**3957**	3221	1.13	3796	3352	1.33	3808	3607	1.77	3833	3837	2.20	3839	4051	2.66	3861	4248	3.11	3883	4430	3.57	3900			
2500	**4655**	3747	1.75	4463	3857	1.98	4470	4082	2.49	4499	4291	3.00	4511	4485	3.50	4514									
2875	**5354**	4278	2.58	5131	4374	2.84	5137	4568	3.39	5156															

LV7 (Low Velocity Nozzle)

Nozzle Outlet Area: 0.537 ft²

FAN INLET CFM	NOZ-ZLE OV	0.5" SP			1" SP			2" SP			3" SP			4" SP			5" SP			6" SP			7" SP		
		RPM	BHP	OUT FLOW	RPM	BHP	OUT FLOW	RPM	BHP	OUT FLOW	RPM	BHP	OUT FLOW	RPM	BHP	OUT FLOW	RPM	BHP	OUT FLOW	RPM	BHP	OUT FLOW	RPM	BHP	OUT FLOW
400	**745**	1202	0.05	715	1522	0.10	734																		
700	**1304**	1640	0.11	1226	1878	0.17	1235	2281	0.34	1262	2642	0.54	1283	2955	0.76	1320	3215	0.98	1358	3457	1.21	1397			
1000	**1862**	2152	0.22	1737	2336	0.31	1752	2669	0.50	1763	2969	0.72	1784	3237	0.96	1801	3493	1.23	1817	3745	1.53	1832	3979	1.86	1854
1300	**2421**	2702	0.42	2253	2842	0.52	2262	3120	0.74	2280	3376	0.99	2286	3619	1.26	2304	3845	1.56	2319	4055	1.86	2332	4256	2.18	2345
1600	**2980**	3268	0.72	2770	3379	0.83	2775	3611	1.10	2794	3834	1.38	2807	4044	1.67	2809	4247	1.99	2819	4442	2.33	2833			
1900	**3538**	3843	1.16	3288	3936	1.29	3292	4127	1.57	3304	4323	1.89	3321	4511	2.23	3332									
2200	**4097**	4422	1.75	3806	4502	1.90	3809																		

LV5 (Low Velocity Nozzle)

Nozzle Outlet Area: 0.537 ft²

FAN INLET CFM	NOZ-ZLE OV	0.5" SP			1" SP			2" SP			3" SP			4" SP			5" SP			6" SP			7" SP		
		RPM	BHP	OUT FLOW	RPM	BHP	OUT FLOW	RPM	BHP	OUT FLOW	RPM	BHP	OUT FLOW	RPM	BHP	OUT FLOW	RPM	BHP	OUT FLOW	RPM	BHP	OUT FLOW	RPM	BHP	OUT FLOW
300	**559**	1216	0.04	523	1547	0.08	522	2022	0.19	564															
525	**978**	1621	0.08	925	1889	0.13	918	2316	0.27	914	2685	0.43	911	2999	0.61	931	3263	0.79	957	3509	0.99	984			
750	**1397**	2087	0.15	1327	2307	0.22	1322	2684	0.38	1310	3004	0.57	1308	3286	0.76	1305	3553	0.99	1304	3806	1.23	1301	4039	1.49	1310
975	**1816**	2591	0.27	1728	2769	0.36	1725	3095	0.55	1712	3385	0.76	1704	3650	0.99	1703	3889	1.23	1700	4111	1.48	1698	4322	1.74	1697
1200	**2235**	3116	0.46	2130	3259	0.56	2125	3544	0.78	2121	3802	1.02	2108	4042	1.27	2099	4268	1.54	2097	4480	1.83	2095			
1425	**2654**	3651	0.73	2532	3771	0.84	2527	4014	1.09	2522	4249	1.36	2518	4466	1.64	2506									
1650	**3073**	4192	1.10	2934	4296	1.22	2929	4504	1.48	2921															

MV (Medium Velocity Nozzle)

Nozzle Outlet Area: 0.403 ft²

FAN INLET CFM	NOZ-ZLE OV	0.5" SP			1" SP			2" SP			3" SP			4" SP			5" SP			6" SP			7" SP		
		RPM	BHP	OUT FLOW	RPM	BHP	OUT FLOW	RPM	BHP	OUT FLOW	RPM	BHP	OUT FLOW	RPM	BHP	OUT FLOW	RPM	BHP	OUT FLOW	RPM	BHP	OUT FLOW	RPM	BHP	OUT FLOW
575	**1427**	1282	0.09	1239	1560	0.16	1317																		
925	**2295**	1713	0.20	1910	1944	0.30	1969	2317	0.52	2064	2632	0.76	2138	2917	1.01	2181	3202	1.30	2241						
1275	**3164**	2198	0.40	2612	2380	0.54	2638	2710	0.83	2721	2990	1.12	2783	3243	1.43	2861	3477	1.76	2922	3692	2.09	2959	3897	2.43	2986
1625	**4032**	2708	0.73	3332	2855	0.90	3331	3139	1.26	3394	3395	1.62	3456	3624	1.99	3501	3837	2.37	3555	4037	2.76	3616	4228	3.17	3675
1975	**4901**	3228	1.22	4057	3357	1.42	4046	3592	1.84	4063	3825	2.28	4127	4040	2.72	4183	4236	3.16	4221	4421	3.61	4258	4598	4.07	4303
2325	**5769**	3756	1.90	4785	3869	2.14	4768	4075	2.62	4764	4274	3.11	4792	4473	3.63	4850									
2675	**6638**	4288	2.81	5512	4389	3.08	5493	4576	3.63	5479															

MV7 (Medium Velocity Nozzle)

Nozzle Outlet Area: 0.403 ft²

FAN INLET CFM	NOZ-ZLE OV	0.5" SP			1" SP			2" SP			3" SP			4" SP			5" SP			6" SP			7" SP		
		RPM	BHP	OUT FLOW	RPM	BHP	OUT FLOW	RPM	BHP	OUT FLOW	RPM	BHP	OUT FLOW	RPM	BHP	OUT FLOW	RPM	BHP	OUT FLOW	RPM	BHP	OUT FLOW	RPM	BHP	OUT FLOW
500	**1241**	1363	0.07	1069	1622	0.13	1126	2052	0.26	1184															
775	**1923**	1816	0.15	1606	2035	0.23	1646	2388	0.40	1716	2684	0.59	1769	2953	0.79	1798									
1050	**2605**	2312	0.29	2162	2490	0.40	2182	2804	0.61	2236	3071	0.84	2284	3312	1.08	2343	3533	1.34	2384	3735	1.59	2408	3932	1.87	2428
1325	**3288**	2832	0.51	2736	2975	0.64	2730	3253	0.91	2778	3497	1.18	2816	3716	1.46	2848	3920	1.76	2894	4111	2.06	2940	4293	2.38	2981
1600	**3970**	3360	0.84	3313	3486	0.99	3298	3718	1.30	3309	3946	1.63	3358	4151	1.96	3392	4338	2.29	3415	4516	2.64	3445			
1875	**4653**	3894	1.28	3891	4007	1.46	3872	4209	1.81	3862	4408	2.19	3887												
2150	**5335**	4433	1.87	4470	4534	2.07	4448																		

MV5 (Medium Velocity Nozzle)

Nozzle Outlet Area: 0.403 ft²

FAN INLET CFM	NOZ-ZLE OV	0.5" SP			1" SP			2" SP			3" SP			4" SP			5" SP			6" SP			7" SP		
		RPM	BHP	OUT FLOW	RPM	BHP	OUT FLOW	RPM	BHP	OUT FLOW	RPM	BHP	OUT FLOW	RPM	BHP	OUT FLOW	RPM	BHP	OUT FLOW	RPM	BHP	OUT FLOW	RPM	BHP	OUT FLOW
375	**931**	1353	0.05	764	1627	0.10	807	2072	0.21	848															
575	**1427**	1758	0.10	1135	2001	0.17	1164	2379	0.31	1221	2686	0.46	1255	2970	0.63	1277									
775	**1923**	2191	0.19	1508	2407	0.27	1536	2754	0.44	1574	3043	0.63	1619	3298	0.82	1660	3525	1.03	1684	3735	1.24	1699	3946	1.47	1716
975	**2419**	2652	0.31	1900	2830	0.41	1902	3156	0.63	1950	3424	0.85	1976	3663	1.07	2008	3881	1.31	2046	4084	1.56	2079	4274	1.81	2103
1175	**2916**	3122	0.49	2294	3279	0.61	2287	3567	0.86	2314	3826	1.13	2353	4051	1.39	2374	4258	1.65	2397	4451	1.93	2426			
1375	**3412**	3599	0.74	2690	3741	0.88	2679	3994	1.16	2683	4236	1.47	2719	4455	1.77	2751									
1575	**3908**	4080	1.06	3086	4210	1.22	3073	4439	1.54	3066															

Class II = Light Blue section

Underlined figures indicate maximum static efficiency.

NOTES:
1. Performance certified is for installation Type A: Free inlet, free outlet.
2. Power rating (BHP) does not include transmission losses.
3. Performance ratings do not include the effects of appurtenances (accessories).
4. Performance ratings do not include the effects of crosswinds.

HV (High Velocity Nozzle)

Nozzle Outlet Area: 0.268 ft²

FAN INLET CFM	NOZ-ZLE OV	0.5" SP			1" SP			2" SP			3" SP			4" SP			5" SP			6" SP			7" SP		
		RPM	BHP	OUT FLOW	RPM	BHP	OUT FLOW	RPM	BHP	OUT FLOW	RPM	BHP	OUT FLOW	RPM	BHP	OUT FLOW	RPM	BHP	OUT FLOW	RPM	BHP	OUT FLOW	RPM	BHP	OUT FLOW
500	**1866**	1281	0.09	1306	1555	0.15	1349	2067	0.32	1377															
800	**2985**	1719	0.21	1995	1938	0.30	2053	2297	0.50	2125	2637	0.74	2188	2964	1.00	2222	3271	1.29	2201						
1100	**4104**	2197	0.42	2703	2382	0.55	2747	2697	0.81	2833	2969	1.09	2903	3213	1.38	2930	3462	1.69	2978	3706	2.04	3024	3944	2.40	3048
1400	**5224**	2696	0.78	3432	2854	0.94	3451	3132	1.26	3521	3377	1.60	3589	3604	1.95	3661	3806	2.30	3698	3995	2.66	3715	4191	3.04	3746
1700	**6343**	3209	1.30	4172	3344	1.49	4171	3592	1.88	4222	3814	2.28	4278	4017	2.68	4333	4211	3.10	4393	4395	3.53	4452	4562	3.95	4483
2000	**7463**	3729	2.04	4914	3847	2.26	4904	4068	2.71	4927	4272	3.17	4979	4460	3.64	5026									
2300	**8582**	4254	3.02	5658	4359	3.27	5643	4557	3.78	5646															

HV7 (High Velocity Nozzle)

Nozzle Outlet Area: 0.268 ft²

FAN INLET CFM	NOZ-ZLE OV	0.5" SP			1" SP			2" SP			3" SP			4" SP			5" SP			6" SP			7" SP		
		RPM	BHP	OUT FLOW	RPM	BHP	OUT FLOW	RPM	BHP	OUT FLOW	RPM	BHP	OUT FLOW	RPM	BHP	OUT FLOW	RPM	BHP	OUT FLOW	RPM	BHP	OUT FLOW	RPM	BHP	OUT FLOW
425	**1586**	1307	0.07	1112	1573	0.12	1147	2084	0.26	1164															
675	**2519**	1763	0.15	1695	1975	0.22	1740	2324	0.38	1795	2656	0.57	1846	2984	0.79	1872	3297	1.04	1855						
925	**3451**	2256	0.30	2293	2436	0.40	2326	2742	0.60	2394	3005	0.81	2445	3244	1.04	2467	3487	1.29	2506	3727	1.56	2538	3968	1.86	2561
1175	**4384**	2770	0.55	2910	2923	0.66	2921	3194	0.91	2975	3431	1.16	3027	3652	1.43	3083	3846	1.71	3107	4034	1.99	3123	4226	2.29	3150
1425	**5317**	3296	0.91	3534	3428	1.05	3529	3670	1.34	3567	3885	1.64	3609	4083	1.95	3653	4272	2.27	3701	4450	2.60	3744			
1675	**6250**	3830	1.41	4161	3945	1.58	4148	4161	1.91	4164	4359	2.26	4202	4541	2.61	4237									
1925	**7183**	4368	2.09	4789	4471	2.27	4773																		

HV5 (High Velocity Nozzle)

Nozzle Outlet Area: 0.268 ft²

FAN INLET CFM	NOZ-ZLE OV	0.5" SP			1" SP			2" SP			3" SP			4" SP			5" SP			6" SP			7" SP		
		RPM	BHP	OUT FLOW	RPM	BHP	OUT FLOW	RPM	BHP	OUT FLOW	RPM	BHP	OUT FLOW	RPM	BHP	OUT FLOW	RPM	BHP	OUT FLOW	RPM	BHP	OUT FLOW	RPM	BHP	OUT FLOW
325	**1213**	1289	0.05	815	1565	0.09	838	2080	0.21	847															
525	**1959**	1726	0.11	1259	1959	0.17	1296	2323	0.30	1333	2658	0.45	1370	2985	0.63	1390	3296	0.83	1378						
725	**2705**	2198	0.21	1714	2401	0.29	1741	2733	0.45	1794	3007	0.63	1829	3254	0.81	1845	3498	1.02	1873	3737	1.24	1898	3974	1.49	1912
925	**3451**	2690	0.37	2181	2868	0.47	2195	3168	0.67	2236	3425	0.88	2277	3658	1.11	2319	3859	1.33	2334	4052	1.56	2346	4246	1.81	2364
1125	**4198**	3195	0.61	2654	3351	0.73	2654	3626	0.97	2689	3863	1.22	2722	4076	1.48	2753	4278	1.74	2792	4463	2.01	2822			
1325	**4944**	3708	0.95	3130	3847	1.09	3124	4096	1.37	3142	4319	1.66	3174	4519	1.95	3201									
1525	**5690**	4227	1.40	3608	4351	1.56	3597	4578	1.87	3601															

XV (Extra High Velocity Nozzle)

Nozzle Outlet Area: 0.134 ft²

FAN INLET CFM	NOZ-ZLE OV	0.5" SP			1" SP			2" SP			3" SP			4" SP			5" SP			6" SP			7" SP		
		RPM	BHP	OUT FLOW	RPM	BHP	OUT FLOW	RPM	BHP	OUT FLOW	RPM	BHP	OUT FLOW	RPM	BHP	OUT FLOW	RPM	BHP	OUT FLOW	RPM	BHP	OUT FLOW	RPM	BHP	OUT FLOW
450	**3358**	1513	0.14	1622	1817	0.23	1659	2297	0.42	1726															
650	**4851**	1953	0.32	2310	2166	0.42	2339	2591	0.66	2392	2951	0.93	2447	3268	1.21	2493									
850	**6343**	2446	0.63	3022	2597	0.74	3019	2931	1.02	3075	3261	1.34	3114	3555	1.68	3147	3825	2.03	3193	4076	2.40	3239	4309	2.77	3260
1050	**7836**	2945	1.10	3719	3082	1.25	3735	3333	1.55	3745	3606	1.90	3795	3880	2.30	3829	4132	2.70	3857	4368	3.12	3885	4591	3.54	3920
1250	**9328**	3452	1.78	4416	3578	1.97	4442	3786	2.30	4440	4005	2.68	4465	4235	3.10	4510	4467	3.56	4540						
1450	**10821**	3964	2.69	5111	4078	2.92	5140	4273	3.33	5158	4447	3.71	5151												
1650	**12313**	4479	3.89	5806	4583	4.15	5836																		

XV7 (Extra High Velocity Nozzle)

Nozzle Outlet Area: 0.134 ft²

FAN INLET CFM	NOZ-ZLE OV	0.5" SP			1" SP			2" SP			3" SP			4" SP			5" SP			6" SP			7" SP		
		RPM	BHP	OUT FLOW	RPM	BHP	OUT FLOW	RPM	BHP	OUT FLOW	RPM	BHP	OUT FLOW	RPM	BHP	OUT FLOW	RPM	BHP	OUT FLOW	RPM	BHP	OUT FLOW	RPM	BHP	OUT FLOW
400	**2985**	1453	0.10	1467	1759	0.17	1505	2251	0.32	1574															
575	**4291**	1868	0.22	2077	2075	0.29	2107	2503	0.48	2161	2874	0.70	2217	3197	0.92	2261									
750	**5597**	2333	0.43	2707	2480	0.52	2710	2806	0.72	2764	3140	0.97	2804	3441	1.23	2839	3721	1.51	2887	3980	1.81	2933	4214	2.11	2952
925	**6903**	2805	0.76	3325	2938	0.86	3344	3180	1.08	3357	3450	1.34	3409	3726	1.64	3443	3983	1.96	3472	4224	2.28	3498	4454	2.63	3533
1100	**8209**	3283	1.22	3941	3404	1.35	3967	3607	1.59	3974	3819	1.86	3998	4047	2.17	4044	4279	2.52	4076	4507	2.89	4102			
1275	**9515**	3767	1.84	4557	3876	2.00	4585	4067	2.29	4610	4235	2.56	4608	4421	2.89	4633									
1450	**10821**	4254	2.65	5174	4353	2.83	5201	4533	3.18	5237															

XV5 (Extra High Velocity Nozzle)

Nozzle Outlet Area: 0.134 ft²

FAN INLET CFM	NOZ-ZLE OV	0.5" SP			1" SP			2" SP			3" SP			4" SP			5" SP			6" SP			7" SP		
		RPM	BHP	OUT FLOW	RPM	BHP	OUT FLOW	RPM	BHP	OUT FLOW	RPM	BHP	OUT FLOW	RPM	BHP	OUT FLOW	RPM	BHP	OUT FLOW	RPM	BHP	OUT FLOW	RPM	BHP	OUT FLOW
300	**2239**	1349	0.07	1070	1663	0.12	1092																		
450	**3358**	1732	0.14	1577	1965	0.21	1600	2400	0.35	1632	2760	0.52	1668	3069	0.69	1694									
600	**4478**	2182	0.29	2107	2346	0.36	2103	2699	0.53	2141	3033	0.72	2165	3326	0.93	2184	3595	1.15	2213	3843	1.37	2244	4068	1.60	2258
750	**5597**	2640	0.51	2626	2787	0.60	2634	3055	0.78	2640	3338	1.00	2673	3615	1.24	2693	3867	1.49	2709	4102	1.75	2727	4322	2.02	2745
900	**6716**	3106	0.84	3142	3242	0.95	3159	3463	1.15	3153	3694	1.38	3171	3930	1.64	3201	4165	1.92	3219	4390	2.22	3234	4600	2.52	3249
1050	**7836**	3578	1.28	3659	3701	1.42	3677	3909	1.66	3686	4093	1.90	3679	4293	2.17	3697	4496	2.47	3725						
1200	**8955**	4054	1.86	4175	4166	2.02	4194	4364	2.32	4215	4529	2.58	4209												

Class II = Light Blue section

Underlined figures indicate maximum static efficiency.

NOTES:

1. Performance certified is for installation Type A: Free inlet, free outlet.
2. Power rating (BHP) does not include transmission losses.
3. Performance ratings do not include the effects of appurtenances (accessories).
4. Performance ratings do not include the effects of crosswinds.

135 BAIFE

Impeller Type: Airfoil **Max Class I RPM = 3265** **Windband Outlet Area: 2.18 ft²**
Impeller Dia.: 13.50" **Max Class II RPM = 4259** **Tip Speed FPM = 3.53 x RPM**

LV (Low Velocity Nozzle)

Nozzle Outlet Area: 0.652 ft²

FAN INLET CFM	NOZ-ZLE OV	0.5" SP			1" SP			2" SP			3" SP			4" SP			5" SP			6" SP			7" SP		
		RPM	BHP	OUT FLOW	RPM	BHP	OUT FLOW	RPM	BHP	OUT FLOW	RPM	BHP	OUT FLOW	RPM	BHP	OUT FLOW	RPM	BHP	OUT FLOW	RPM	BHP	OUT FLOW	RPM	BHP	OUT FLOW
750	**1150**	1122	0.10	1267	1384	0.19	1311																		
1225	**1879**	1486	0.24	2020	1707	0.37	2050	2055	0.64	2099	2358	0.95	2167	2635	1.30	2253									
1700	**2607**	1889	0.47	2794	2076	0.65	2805	2390	1.01	2849	2651	1.38	2884	2886	1.77	2920	3106	2.20	2962	3318	2.65	3020	3520	3.12	3084
2175	**3336**	2314	0.84	3558	2474	1.08	3584	2753	1.53	3600	2997	1.99	3637	3211	2.45	3665	3409	2.92	3693	3595	3.43	3721	3771	3.95	3749
2650	**4064**	2756	1.39	4328	2888	1.67	4346	3138	2.23	4370	3361	2.78	4388	3566	3.35	4421	3751	3.91	4445	3923	4.47	4467	4086	5.04	4489
3125	**4793**	3206	2.16	5099	3317	2.48	5110	3541	3.16	5148	3743	3.80	5153	3932	4.45	5169	4110	5.12	5197						
3600	**5521**	3663	3.20	5874	3758	3.55	5880	3954	4.31	5910	4141	5.08	5933												

LV7 (Low Velocity Nozzle)

Nozzle Outlet Area: 0.652 ft²

FAN INLET CFM	NOZ-ZLE OV	0.5" SP			1" SP			2" SP			3" SP			4" SP			5" SP			6" SP			7" SP		
		RPM	BHP	OUT FLOW	RPM	BHP	OUT FLOW	RPM	BHP	OUT FLOW	RPM	BHP	OUT FLOW	RPM	BHP	OUT FLOW	RPM	BHP	OUT FLOW	RPM	BHP	OUT FLOW	RPM	BHP	OUT FLOW
475	**729**	1054	0.06	782	1366	0.13	819																		
850	**1304**	1407	0.13	1361	1643	0.22	1379	2037	0.43	1412	2384	0.70	1453	2658	0.97	1507									
1225	**1879**	1831	0.27	1949	2015	0.38	1962	2345	0.62	1986	2632	0.91	2011	2895	1.23	2031	3153	1.60	2053	3386	2.00	2085	3591	2.39	2124
1600	**2454**	2290	0.50	2537	2434	0.64	2550	2710	0.93	2564	2963	1.25	2582	3198	1.60	2606	3413	1.97	2624	3617	2.37	2640	3817	2.81	2656
1975	**3029**	2767	0.87	3127	2881	1.02	3135	3116	1.37	3158	3335	1.73	3165	3543	2.11	3177	3742	2.53	3197	3930	2.97	3215	4107	3.42	3229
2350	**3604**	3253	1.39	3718	3348	1.56	3724	3544	1.95	3742	3740	2.38	3761	3923	2.80	3764	4101	3.24	3771						
2725	**4179**	3744	2.11	4309	3825	2.30	4314	3991	2.71	4327	4163	3.19	4345												

LV5 (Low Velocity Nozzle)

Nozzle Outlet Area: 0.652 ft²

FAN INLET CFM	NOZ-ZLE OV	0.5" SP			1" SP			2" SP			3" SP			4" SP			5" SP			6" SP			7" SP		
		RPM	BHP	OUT FLOW	RPM	BHP	OUT FLOW	RPM	BHP	OUT FLOW	RPM	BHP	OUT FLOW	RPM	BHP	OUT FLOW	RPM	BHP	OUT FLOW	RPM	BHP	OUT FLOW	RPM	BHP	OUT FLOW
350	**537**	1064	0.05	556	1380	0.10	569																		
650	**997**	1415	0.10	1041	1674	0.17	1037	2082	0.35	1032	2431	0.57	1041	2710	0.79	1077	2960	1.03	1115						
950	**1457**	1830	0.20	1535	2042	0.29	1525	2402	0.50	1515	2702	0.74	1512	2972	1.00	1510	3228	1.31	1502	3463	1.64	1512	3674	1.97	1534
1250	**1917**	2281	0.37	2023	2455	0.48	2020	2766	0.73	2000	3042	1.01	1994	3290	1.31	1992	3514	1.62	1990	3724	1.95	1989	3926	2.31	1988
1550	**2377**	2754	0.63	2512	2893	0.76	2505	3167	1.07	2501	3412	1.37	2481	3640	1.70	2473	3853	2.06	2472	4052	2.43	2472	4236	2.81	2469
1850	**2837**	3238	1.01	3003	3354	1.16	2995	3589	1.50	2989	3812	1.87	2982	4018	2.23	2965	4213	2.61	2954						
2150	**3298**	3728	1.52	3492	3828	1.69	3485	4029	2.06	3476	4230	2.48	3473												

MV (Medium Velocity Nozzle)

Nozzle Outlet Area: 0.489 ft²

FAN INLET CFM	NOZ-ZLE OV	0.5" SP			1" SP			2" SP			3" SP			4" SP			5" SP			6" SP			7" SP		
		RPM	BHP	OUT FLOW	RPM	BHP	OUT FLOW	RPM	BHP	OUT FLOW	RPM	BHP	OUT FLOW	RPM	BHP	OUT FLOW	RPM	BHP	OUT FLOW	RPM	BHP	OUT FLOW	RPM	BHP	OUT FLOW
700	**1431**	1124	0.11	1399	1389	0.19	1487																		
1150	**2352**	1491	0.25	2186	1712	0.38	2254	2070	0.66	2390	2368	0.95	2458	2656	1.30	2533									
1600	**3272**	1905	0.51	2996	2086	0.69	3046	2400	1.04	3140	2668	1.42	3238	2909	1.82	3333	3128	2.23	3389	3334	2.66	3427	3540	3.12	3473
2050	**4192**	2348	0.94	3838	2491	1.16	3844	2770	1.62	3942	3012	2.07	4008	3231	2.53	4073	3433	3.02	4154	3624	3.53	4234	3805	4.05	4295
2500	**5112**	2800	1.57	4686	2925	1.84	4678	3157	2.38	4719	3383	2.95	4808	3585	3.50	4865	3772	4.05	4913	3948	4.62	4968	4116	5.21	5036
2950	**6033**	3260	2.45	5540	3371	2.77	5523	3571	3.41	5530	3768	4.06	5585	3960	4.73	5662	4136	5.38	5718						
3400	**6953**	3725	3.64	6396	3823	4.00	6372	4004	4.73	6363	4174	5.47	6384												

MV7 (Medium Velocity Nozzle)

Nozzle Outlet Area: 0.489 ft²

FAN INLET CFM	NOZ-ZLE OV	0.5" SP			1" SP			2" SP			3" SP			4" SP			5" SP			6" SP			7" SP		
		RPM	BHP	OUT FLOW	RPM	BHP	OUT FLOW	RPM	BHP	OUT FLOW	RPM	BHP	OUT FLOW	RPM	BHP	OUT FLOW	RPM	BHP	OUT FLOW	RPM	BHP	OUT FLOW	RPM	BHP	OUT FLOW
600	**1227**	1178	0.09	1188	1426	0.16	1254																		
925	**1892**	1533	0.18	1769	1744	0.27	1811	2088	0.49	1914	2374	0.72	1959												
1250	**2556**	1918	0.33	2355	2102	0.46	2400	2406	0.72	2459	2666	1.00	2543	2898	1.30	2601	3108	1.61	2632	3321	1.97	2669			
1575	**3221**	2329	0.57	2968	2477	0.73	2974	2757	1.06	3048	2993	1.39	3090	3207	1.73	3154	3406	2.10	3220	3591	2.47	3267	3761	2.85	3295
1900	**3885**	2750	0.91	3588	2877	1.10	3577	3122	1.50	3625	3344	1.89	3679	3542	2.29	3713	3726	2.70	3758	3900	3.12	3816	4064	3.56	3870
2225	**4550**	3176	1.38	4211	3291	1.61	4193	3501	2.06	4202	3708	2.52	4261	3896	2.99	4305	4068	3.45	4334	4230	3.92	4365			
2550	**5215**	3607	2.00	4836	3710	2.26	4811	3897	2.77	4801	4081	3.29	4833												

MV5 (Medium Velocity Nozzle)

Nozzle Outlet Area: 0.489 ft²

FAN INLET CFM	NOZ-ZLE OV	0.5" SP			1" SP			2" SP			3" SP			4" SP			5" SP			6" SP			7" SP		
		RPM	BHP	OUT FLOW	RPM	BHP	OUT FLOW	RPM	BHP	OUT FLOW	RPM	BHP	OUT FLOW	RPM	BHP	OUT FLOW	RPM	BHP	OUT FLOW	RPM	BHP	OUT FLOW	RPM	BHP	OUT FLOW
450	920	1174	0.06	852	1433	0.12	898																		
725	1483	1547	0.13	1316	1776	0.22	1351	2133	0.39	1425	2422	0.59	1459	2712	0.83	1500									
1000	2045	1946	0.25	1780	2152	0.36	1818	2478	0.59	1867	2748	0.83	1927	2986	1.08	1972	3197	1.35	1997	3400	1.64	2018	3611	1.97	2048
1275	2607	2375	0.44	2269	2545	0.58	2278	2850	0.86	2336	3101	1.14	2371	3324	1.44	2415	3528	1.76	2463	3718	2.08	2501	3892	2.41	2526
1550	3170	2814	0.71	2763	2961	0.87	2757	3234	1.22	2797	3474	1.56	2841	3684	1.90	2869	3877	2.26	2901	4057	2.62	2940	4226	3.00	2980
1825	3732	3259	1.08	3259	3393	1.28	3248	3631	1.67	3258	3858	2.08	3305	4061	2.49	3342	4244	2.89	3366						
2100	4294	3709	1.57	3757	3832	1.80	3742	4046	2.24	3737	4249	2.70	3761												

Class II = Light Blue section

Underlined figures indicate maximum static efficiency.

NOTES:
1. Performance certified is for installation Type A: Free inlet, free outlet.
2. Power rating (BHP) does not include transmission losses.
3. Performance ratings do not include the effects of appurtenances (accessories).
4. Performance ratings do not include the effects of crosswinds.

HV (High Velocity Nozzle)

Nozzle Outlet Area: 0.326 ft²

FAN INLET CFM	NOZ-ZLE OV	0.5" SP			1" SP			2" SP			3" SP			4" SP			5" SP			6" SP			7" SP		
		RPM	BHP	OUT FLOW	RPM	BHP	OUT FLOW	RPM	BHP	OUT FLOW	RPM	BHP	OUT FLOW	RPM	BHP	OUT FLOW	RPM	BHP	OUT FLOW	RPM	BHP	OUT FLOW	RPM	BHP	OUT FLOW
600	**1840**	1112	0.10	1449	1394	0.19	1512																		
975	**2991**	1473	0.25	2235	1689	0.36	2322	2043	0.62	2400	2386	0.93	2472	2706	1.28	2458									
1350	**4141**	1872	0.51	3039	2054	0.66	3101	2362	0.99	3223	2617	1.32	3275	2871	1.70	3335	3121	2.12	3398	3363	2.57	3426	3597	3.05	3426
1725	**5291**	2292	0.93	3867	2448	1.13	3902	2718	1.53	3995	2958	1.95	4094	3170	2.37	4158	3363	2.81	4185	3563	3.29	4232	3761	3.80	4286
2100	**6442**	2724	1.56	4708	2859	1.80	4716	3102	2.29	4792	3317	2.78	4868	3515	3.29	4945	3703	3.81	5024	3871	4.32	5064	4029	4.84	5086
2475	**7592**	3164	2.44	5556	3282	2.73	5548	3500	3.31	5595	3699	3.89	5663	3880	4.46	5726	4051	5.05	5791	4216	5.65	5861			
2850	**8742**	3608	3.62	6404	3713	3.95	6388	3910	4.61	6407	4093	5.28	6465												

HV7 (High Velocity Nozzle)

Nozzle Outlet Area: 0.326 ft²

FAN INLET CFM	NOZ-ZLE OV	0.5" SP			1" SP			2" SP			3" SP			4" SP			5" SP			6" SP			7" SP		
		RPM	BHP	OUT FLOW	RPM	BHP	OUT FLOW	RPM	BHP	OUT FLOW	RPM	BHP	OUT FLOW	RPM	BHP	OUT FLOW	RPM	BHP	OUT FLOW	RPM	BHP	OUT FLOW	RPM	BHP	OUT FLOW
500	**1534**	1119	0.08	1208	1399	0.14	1255																		
800	**2454**	1479	0.17	1849	1691	0.26	1918	2043	0.46	1975	2392	0.71	2027												
1100	**3374**	1873	0.34	2501	2052	0.45	2548	2356	0.70	2647	2610	0.96	2677	2865	1.26	2728	3119	1.59	2769	3370	1.97	2787	3611	2.39	2769
1400	**4294**	2286	0.60	3167	2441	0.75	3198	2708	1.05	3270	2946	1.36	3354	3150	1.68	3385	3350	2.03	3411	3551	2.40	3453	3750	2.80	3493
1700	**5215**	2711	0.99	3848	2846	1.17	3856	3087	1.53	3916	3299	1.89	3974	3497	2.28	4044	3679	2.66	4097	3841	3.05	4111	4005	3.46	4130
2000	**6135**	3142	1.54	4532	3261	1.75	4525	3479	2.17	4567	3675	2.59	4618	3855	3.02	4668	4026	3.46	4724	4189	3.92	4785			
2300	**7055**	3579	2.27	5219	3685	2.50	5205	3882	2.98	5222	4064	3.47	5270	4232	3.96	5313									

HV5 (High Velocity Nozzle)

Nozzle Outlet Area: 0.326 ft²

FAN INLET CFM	NOZ-ZLE OV	0.5" SP			1" SP			2" SP			3" SP			4" SP			5" SP			6" SP			7" SP		
		RPM	BHP	OUT FLOW	RPM	BHP	OUT FLOW	RPM	BHP	OUT FLOW	RPM	BHP	OUT FLOW	RPM	BHP	OUT FLOW	RPM	BHP	OUT FLOW	RPM	BHP	OUT FLOW	RPM	BHP	OUT FLOW
400	**1227**	1132	0.06	922	1409	0.12	957																		
650	**1994**	1499	0.13	1434	1722	0.21	1484	2074	0.37	1523	2409	0.58	1565	2730	0.83	1560									
900	**2761**	1895	0.26	1952	2090	0.36	1987	2408	0.57	2059	2664	0.78	2084	2913	1.03	2117	3155	1.31	2151	3395	1.62	2171	3629	1.96	2173
1150	**3528**	2308	0.46	2479	2482	0.59	2505	2769	0.84	2559	3017	1.11	2619	3229	1.38	2650	3424	1.67	2664	3620	1.98	2689	3811	2.31	2717
1400	**4294**	2734	0.75	3019	2887	0.91	3025	3153	1.22	3073	3379	1.53	3117	3585	1.85	3165	3775	2.18	3209	3943	2.52	3227	4102	2.86	3237
1650	**5061**	3168	1.16	3562	3304	1.34	3557	3547	1.71	3590	3760	2.07	3629	3951	2.44	3666	4130	2.81	3706						
1900	**5828**	3607	1.71	4107	3729	1.92	4096	3952	2.33	4111	4152	2.76	4147												

XV (Extra High Velocity Nozzle)

Nozzle Outlet Area: 0.163 ft²

FAN INLET CFM	NOZ-ZLE OV	0.5" SP			1" SP			2" SP			3" SP			4" SP			5" SP			6" SP			7" SP		
		RPM	BHP	OUT FLOW	RPM	BHP	OUT FLOW	RPM	BHP	OUT FLOW	RPM	BHP	OUT FLOW	RPM	BHP	OUT FLOW	RPM	BHP	OUT FLOW	RPM	BHP	OUT FLOW	RPM	BHP	OUT FLOW
550	**3374**	1322	0.17	1824	1615	0.27	1868																		
775	**4755**	1634	0.35	2518	1866	0.48	2570	2282	0.77	2636	2626	1.11	2712												
1000	**6135**	2002	0.66	3252	2167	0.80	3261	2527	1.15	3333	2847	1.53	3382	3131	1.94	3448	3390	2.38	3500						
1225	**7515**	2381	1.13	3977	2516	1.29	3978	2802	1.67	4036	3096	2.11	4085	3362	2.57	4122	3607	3.05	4165	3835	3.56	4224	4050	4.10	4275
1450	**8896**	2765	1.78	4694	2891	1.99	4715	3117	2.39	4722	3365	2.87	4785	3615	3.39	4827	3848	3.93	4864	4064	4.48	4893			
1675	**10276**	3154	2.65	5411	3271	2.91	5442	3465	3.36	5438	3671	3.87	5472	3887	4.42	5529	4104	5.02	5565						
1900	**11656**	3545	3.78	6125	3653	4.09	6160	3836	4.63	6176	4005	5.14	6173	4191	5.73	6216									

XV7 (Extra High Velocity Nozzle)

Nozzle Outlet Area: 0.163 ft²

FAN INLET CFM	NOZ-ZLE OV	0.5" SP			1" SP			2" SP			3" SP			4" SP			5" SP			6" SP			7" SP		
		RPM	BHP	OUT FLOW	RPM	BHP	OUT FLOW	RPM	BHP	OUT FLOW	RPM	BHP	OUT FLOW	RPM	BHP	OUT FLOW	RPM	BHP	OUT FLOW	RPM	BHP	OUT FLOW	RPM	BHP	OUT FLOW
475	**2914**	1254	0.12	1607	1557	0.20	1659																		
700	**4294**	1587	0.26	2312	1809	0.35	2362	2229	0.59	2429	2583	0.86	2508												
925	**5675**	1988	0.52	3057	2138	0.62	3061	2479	0.89	3137	2800	1.20	3185	3090	1.53	3245	3355	1.89	3306						
1150	**7055**	2398	0.92	3785	2525	1.05	3799	2779	1.33	3835	3056	1.67	3894	3323	2.05	3937	3569	2.44	3976	3800	2.86	4022	4020	3.31	4078
1375	**8436**	2815	1.50	4510	2933	1.67	4541	3132	1.97	4542	3355	2.33	4594	3586	2.73	4645	3817	3.17	4681	4033	3.63	4717	4237	4.10	4747
1600	**9816**	3236	2.28	5233	3343	2.49	5268	3524	2.85	5286	3699	3.22	5294	3892	3.64	5343	4089	4.10	5389						
1825	**11196**	3661	3.32	5957	3758	3.56	5992	3930	4.00	6030	4078	4.39	6027	4235	4.82	6041									

XV5 (Extra High Velocity Nozzle)

Nozzle Outlet Area: 0.163 ft²

FAN INLET CFM	NOZ-ZLE OV	0.5" SP			1" SP			2" SP			3" SP			4" SP			5" SP			6" SP			7" SP		
		RPM	BHP	OUT FLOW	RPM	BHP	OUT FLOW	RPM	BHP	OUT FLOW	RPM	BHP	OUT FLOW	RPM	BHP	OUT FLOW	RPM	BHP	OUT FLOW	RPM	BHP	OUT FLOW	RPM	BHP	OUT FLOW
375	**2301**	1202	0.08	1228	1499	0.15	1259																		
575	**3528**	1532	0.19	1842	1763	0.27	1876	2173	0.46	1912	2511	0.67	1965												
775	**4755**	1936	0.39	2488	2095	0.48	2485	2439	0.70	2535	2752	0.95	2563	3027	1.22	2590	3279	1.51	2633	3507	1.81	2661			
975	**5982**	2351	0.70	3122	2488	0.82	3127	2750	1.06	3144	3023	1.34	3183	3283	1.65	3207	3519	1.97	3227	3739	2.31	3251	3945	2.66	3279
1175	**7209**	2773	1.16	3751	2901	1.31	3771	3111	1.58	3763	3336	1.88	3793	3562	2.22	3827	3786	2.59	3849	3996	2.97	3870	4192	3.36	3887
1375	**8436**	3200	1.80	4379	3316	1.98	4402	3510	2.30	4409	3690	2.62	4407	3883	2.98	4436	4077	3.37	4469						
1575	**9663**	3631	2.63	5007	3737	2.84	5031	3923	3.24	5055	4078	3.59	5047	4237	3.96	5049									

Class II = Light Blue section

Underlined figures indicate maximum static efficiency.

NOTES:

1. Performance certified is for installation Type A: Free inlet, free outlet.
2. Power rating (BHP) does not include transmission losses.
3. Performance ratings do not include the effects of appurtenances (accessories).
4. Performance ratings do not include the effects of crosswinds.

150 BAIFE

Impeller Type: Airfoil **Max Class I RPM = 3260** **Windband Outlet Area: 2.70 ft²**
Impeller Dia.: 15.00" **Max Class II RPM = 4252** **Tip Speed FPM = 3.93 x RPM**

LV (Low Velocity Nozzle)

Nozzle Outlet Area: 0.805 ft²

FAN INLET CFM	NOZ-ZLE OV	0.5" SP			1" SP			2" SP			4" SP			6" SP			8" SP			10" SP			12" SP		
		RPM	BHP	OUT FLOW	RPM	BHP	OUT FLOW	RPM	BHP	OUT FLOW	RPM	BHP	OUT FLOW	RPM	BHP	OUT FLOW	RPM	BHP	OUT FLOW	RPM	BHP	OUT FLOW	RPM	BHP	OUT FLOW
925	**1149**	1048	0.13	1699	1268	0.24	1743																		
1600	**1988**	1478	0.33	2887	1658	0.50	2905	1949	0.85	2959	2421	1.63	3083												
2275	**2826**	1951	0.72	4075	2098	0.96	4103	2353	1.43	4132	2763	2.41	4206	3110	3.47	4282	3428	4.62	4376	3727	5.85	4497			
2950	**3665**	2452	1.38	5273	2568	1.67	5295	2787	2.28	5322	3164	3.52	5382	3478	4.78	5435	3761	6.10	5492	4021	7.50	5548			
3625	**4503**	2965	2.39	6472	3058	2.72	6484	3247	3.47	6526	3584	4.95	6552	3882	6.51	6611	4145	8.05	6658						
4300	**5342**	3485	3.84	7673	3564	4.22	7684	3723	5.06	7713	4027	6.83	7757												
4975	**6180**	4010	5.80	8877	4077	6.23	8883	4213	7.16	8902															

LV7 (Low Velocity Nozzle)

Nozzle Outlet Area: 0.805 ft²

FAN INLET CFM	NOZ-ZLE OV	0.5" SP			1" SP			2" SP			4" SP			6" SP			8" SP			10" SP			12" SP		
		RPM	BHP	OUT FLOW	RPM	BHP	OUT FLOW	RPM	BHP	OUT FLOW	RPM	BHP	OUT FLOW	RPM	BHP	OUT FLOW	RPM	BHP	OUT FLOW	RPM	BHP	OUT FLOW	RPM	BHP	OUT FLOW
600	**745**	981	0.07	1071	1243	0.15	1100																		
1125	**1398**	1407	0.18	1968	1592	0.29	1979	1912	0.54	2019	2452	1.20	2087	2862	1.90	2196									
1650	**2050**	1905	0.41	2863	2043	0.55	2884	2298	0.85	2899	2743	1.57	2952	3129	2.43	2997	3496	3.46	3044	3810	4.50	3114	4081	5.52	3187
2175	**2702**	2437	0.83	3767	2538	0.99	3777	2747	1.36	3809	3125	2.18	3831	3467	3.13	3875	3774	4.16	3911	4063	5.29	3943			
2700	**3354**	2982	1.50	4673	3063	1.68	4681	3229	2.09	4702	3555	3.04	4736	3855	4.07	4752	4138	5.23	4790						
3225	**4006**	3534	2.47	5581	3601	2.68	5586	3737	3.13	5600	4019	4.21	5641												
3750	**4658**	4089	3.80	6488	4146	4.03	6491																		

LV5 (Low Velocity Nozzle)

Nozzle Outlet Area: 0.805 ft²

FAN INLET CFM	NOZ-ZLE OV	0.5" SP			1" SP			2" SP			4" SP			6" SP			8" SP			10" SP			12" SP		
		RPM	BHP	OUT FLOW	RPM	BHP	OUT FLOW	RPM	BHP	OUT FLOW	RPM	BHP	OUT FLOW	RPM	BHP	OUT FLOW	RPM	BHP	OUT FLOW	RPM	BHP	OUT FLOW	RPM	BHP	OUT FLOW
450	**559**	993	0.06	783	1263	0.12	780	1652	0.28	848															
875	**1087**	1420	0.14	1546	1626	0.23	1528	1965	0.44	1524	2510	0.98	1520	2929	1.58	1589									
1300	**1615**	1916	0.31	2302	2077	0.43	2297	2362	0.69	2274	2834	1.31	2266	3227	2.01	2261	3590	2.85	2251	3913	3.74	2281	4192	4.63	2329
1725	**2143**	2450	0.62	3062	2571	0.76	3053	2812	1.09	3046	3228	1.80	3013	3591	2.62	3011	3908	3.48	3003	4201	4.42	2999			
2150	**2671**	2999	1.12	3820	3097	1.28	3812	3293	1.65	3803	3662	2.48	3780	3990	3.38	3757									
2575	**3199**	3557	1.84	4579	3638	2.03	4571	3801	2.43	4559	4127	3.40	4551												
3000	**3727**	4119	2.83	5337	4189	3.05	5331																		

MV (Medium Velocity Nozzle)

Nozzle Outlet Area: 0.603 ft²

FAN INLET CFM	NOZ-ZLE OV	0.5" SP			1" SP			2" SP			4" SP			6" SP			8" SP			10" SP			12" SP		
		RPM	BHP	OUT FLOW	RPM	BHP	OUT FLOW	RPM	BHP	OUT FLOW	RPM	BHP	OUT FLOW	RPM	BHP	OUT FLOW	RPM	BHP	OUT FLOW	RPM	BHP	OUT FLOW	RPM	BHP	OUT FLOW
875	**1451**	1055	0.13	1883	1280	0.24	1996	1654	0.49	2128															
1500	**2488**	1481	0.35	3085	1662	0.52	3173	1958	0.87	3299	2431	1.63	3496												
2125	**3524**	1963	0.78	4352	2097	1.00	4370	2354	1.48	4498	2771	2.46	4672	3127	3.52	4858	3440	4.62	4953	3742	5.82	5040			
2750	**4561**	2465	1.51	5644	2575	1.79	5632	2781	2.37	5683	3160	3.60	5861	3481	4.86	5989	3771	6.20	6149	4040	7.60	6283			
3375	**5597**	2976	2.61	6941	3071	2.96	6917	3243	3.65	6919	3577	5.14	7064	3875	6.65	7193	4141	8.16	7289						
4000	**6633**	3493	4.19	8239	3575	4.59	8209	3729	5.41	8193	4012	7.09	8250												
4625	**7670**	4014	6.32	9539	4087	6.78	9508	4225	7.72	9478															

MV7 (Medium Velocity Nozzle)

Nozzle Outlet Area: 0.603 ft²

FAN INLET CFM	NOZ-ZLE OV	0.5" SP			1" SP			2" SP			4" SP			6" SP			8" SP			10" SP			12" SP		
		RPM	BHP	OUT FLOW	RPM	BHP	OUT FLOW	RPM	BHP	OUT FLOW	RPM	BHP	OUT FLOW	RPM	BHP	OUT FLOW	RPM	BHP	OUT FLOW	RPM	BHP	OUT FLOW	RPM	BHP	OUT FLOW
750	**1244**	1113	0.11	1545	1324	0.19	1630	1676	0.40																
1225	**2032**	1543	0.25	2532	1717	0.38	2594	1999	0.65	2686	2449	1.24	2824												
1700	**2819**	2017	0.53	3506	2151	0.69	3517	2400	1.04	3605	2802	1.78	3742	3142	2.59	3867	3443	3.45	3928	3755	4.46	4014			
2175	**3607**	2509	0.97	4499	2619	1.18	4482	2828	1.61	4529	3194	2.51	4640	3506	3.46	4752	3786	4.48	4875	4042	5.52	4954			
2650	**4395**	3009	1.64	5496	3105	1.89	5470	3278	2.39	5462	3613	3.48	5584	3900	4.58	5656	4160	5.73	5740						
3125	**5182**	3515	2.57	6497	3599	2.86	6464	3753	3.45	6439	4044	4.69	6497												
3600	**5970**	4024	3.82	7496	4099	4.16	7462	4239	4.83	7427															

MV5 (Medium Velocity Nozzle)

Nozzle Outlet Area: 0.603 ft²

FAN INLET CFM	NOZ-ZLE OV	0.5" SP			1" SP			2" SP			4" SP			6" SP			8" SP			10" SP			12" SP		
		RPM	BHP	OUT FLOW	RPM	BHP	OUT FLOW	RPM	BHP	OUT FLOW	RPM	BHP	OUT FLOW	RPM	BHP	OUT FLOW	RPM	BHP	OUT FLOW	RPM	BHP	OUT FLOW	RPM	BHP	OUT FLOW
550	**912**	1092	0.08	1124	1317	0.15	1188																		
925	**1534**	1507	0.18	1816	1702	0.28	1864	2005	0.50	1942	2471	0.99	2036												
1300	**2156**	1961	0.36	2530	2122	0.49	2554	2398	0.78	2620	2828	1.40	2733	3180	2.07	2819	3488	2.78	2864	3803	3.62	2924			
1675	**2778**	2438	0.65	3265	2570	0.82	3261	2815	1.19	3314	3215	1.93	3400	3546	2.72	3489	3839	3.57	3578	4102	4.44	3633			
2050	**3400**	2924	1.10	4006	3041	1.30	3992	3248	1.72	4004	3625	2.63	4103	3936	3.54	4161	4213	4.50	4231						
2425	**4022**	3416	1.71	4749	3520	1.96	4728	3704	2.45	4721	4045	3.49	4790												
2800	**4643**	3912	2.54	5492	4005	2.83	5468	4174	3.39	5450															

Class II = Light Blue section

Underlined figures indicate maximum static efficiency.

NOTES:
1. Performance certified is for installation Type A: Free inlet, free outlet.
2. Power rating (BHP) does not include transmission losses.
3. Performance ratings do not include the effects of appurtenances (accessories).
4. Performance ratings do not include the effects of crosswinds.

HV (High Velocity Nozzle)

Nozzle Outlet Area: 0.402 ft²

FAN INLET CFM	NOZ-ZLE OV	0.5" SP			1" SP			2" SP			4" SP			6" SP			8" SP			10" SP			12" SP		
		RPM	BHP	OUT FLOW	RPM	BHP	OUT FLOW	RPM	BHP	OUT FLOW	RPM	BHP	OUT FLOW	RPM	BHP	OUT FLOW	RPM	BHP	OUT FLOW	RPM	BHP	OUT FLOW	RPM	BHP	OUT FLOW
725	**1803**	1028	0.12	1900	1258	0.22	1968																		
1275	**3172**	1467	0.35	3165	1641	0.50	3249	1927	0.82	3373	2444	1.58	3527	2918	2.49	3490									
1825	**4540**	1952	0.82	4477	2094	1.03	4530	2338	1.45	4645	2741	2.36	4825	3106	3.38	4935	3464	4.52	5042	3809	5.77	5082	4132	7.10	5018
2375	**5908**	2458	1.62	5825	2575	1.88	5832	2787	2.43	5924	3147	3.56	6099	3461	4.75	6259	3736	5.97	6314	4019	7.32	6411			
2925	**7276**	2975	2.85	7183	3074	3.17	7171	3258	3.83	7213	3582	5.19	7363	3867	6.60	7508	4131	8.07	7661						
3475	**8644**	3500	4.63	8549	3585	5.01	8526	3746	5.78	8528	4039	7.38	8649												
4025	**10012**	4028	7.04	9913	4102	7.48	9884	4245	8.36	9868															

HV7 (High Velocity Nozzle)

Nozzle Outlet Area: 0.402 ft²

FAN INLET CFM	NOZ-ZLE OV	0.5" SP			1" SP			2" SP			4" SP			6" SP			8" SP			10" SP			12" SP		
		RPM	BHP	OUT FLOW	RPM	BHP	OUT FLOW	RPM	BHP	OUT FLOW	RPM	BHP	OUT FLOW	RPM	BHP	OUT FLOW	RPM	BHP	OUT FLOW	RPM	BHP	OUT FLOW	RPM	BHP	OUT FLOW
625	**1555**	1057	0.10	1641	1276	0.17	1688																		
1075	**2674**	1505	0.25	2688	1674	0.37	2754	1951	0.62	2846	2460	1.23	2968												
1525	**3794**	1996	0.57	3778	2134	0.72	3815	2372	1.05	3906	2763	1.75	4036	3123	2.55	4125	3480	3.48	4204	3831	4.54	4226			
1975	**4913**	2506	1.10	4895	2620	1.30	4895	2828	1.71	4964	3180	2.56	5107	3483	3.47	5216	3757	4.43	5259	4036	5.50	5341			
2425	**6032**	3027	1.92	6022	3124	2.16	6006	3304	2.65	6034	3621	3.66	6149	3900	4.73	6267	4157	5.85	6380						
2875	**7152**	3554	3.09	7150	3638	3.37	7127	3796	3.94	7123	4084	5.12	7213												
3325	**8271**	4085	4.68	8280	4159	5.00	8254																		

HV5 (High Velocity Nozzle)

Nozzle Outlet Area: 0.402 ft²

FAN INLET CFM	NOZ-ZLE OV	0.5" SP			1" SP			2" SP			4" SP			6" SP			8" SP			10" SP			12" SP		
		RPM	BHP	OUT FLOW	RPM	BHP	OUT FLOW	RPM	BHP	OUT FLOW	RPM	BHP	OUT FLOW	RPM	BHP	OUT FLOW	RPM	BHP	OUT FLOW	RPM	BHP	OUT FLOW	RPM	BHP	OUT FLOW
475	**1182**	1039	0.07	1195	1268	0.13	1229																		
850	**2114**	1489	0.19	2032	1672	0.28	2080	1962	0.48	2146	2469	0.98	2237	2945	1.63	2226									
1225	**3047**	1978	0.41	2891	2135	0.55	2926	2392	0.82	2993	2801	1.40	3092	3158	2.06	3151	3504	2.82	3212	3846	3.69	3242	4172	4.65	3220
1600	**3980**	2489	0.80	3777	2621	0.97	3781	2852	1.32	3836	3228	2.04	3941	3545	2.81	4028	3819	3.60	4056	4093	4.48	4108			
1975	**4913**	3012	1.40	4670	3125	1.61	4659	3330	2.03	4687	3676	2.89	4775	3972	3.79	4862	4240	4.74	4948						
2350	**5846**	3542	2.26	5565	3641	2.50	5549	3823	2.99	5550	4143	4.01	5623												
2725	**6779**	4077	3.43	6463	4164	3.71	6442																		

XV (Extra High Velocity Nozzle)

Nozzle Outlet Area: 0.201 ft²

FAN INLET CFM	NOZ-ZLE OV	0.5" SP			1" SP			2" SP			4" SP			6" SP			8" SP			10" SP			12" SP		
		RPM	BHP	OUT FLOW	RPM	BHP	OUT FLOW	RPM	BHP	OUT FLOW	RPM	BHP	OUT FLOW	RPM	BHP	OUT FLOW	RPM	BHP	OUT FLOW	RPM	BHP	OUT FLOW	RPM	BHP	OUT FLOW
675	**3358**	1236	0.21	2434	1484	0.34	2488	1876	0.63	2588															
1025	**5100**	1662	0.54	3646	1824	0.69	3676	2160	1.07	3757	2706	1.92	3913												
1375	**6841**	2133	1.15	4883	2251	1.33	4886	2498	1.76	4950	2989	2.80	5058	3405	3.92	5176	3772	5.13	5275						
1725	**8582**	2613	2.12	6104	2720	2.37	6136	2903	2.84	6133	3309	4.01	6256	3697	5.33	6336	4042	6.70	6417						
2075	**10323**	3099	3.54	7321	3195	3.86	7363	3357	4.44	7381	3676	5.67	7436	4017	7.14	7534									
2425	**12065**	3589	5.51	8536	3675	5.90	8581	3828	6.61	8629	4087	7.92	8621												
2775	**13806**	4083	8.12	9755	4160	8.56	9797																		

XV7 (Extra High Velocity Nozzle)

Nozzle Outlet Area: 0.201 ft²

FAN INLET CFM	NOZ-ZLE OV	0.5" SP			1" SP			2" SP			4" SP			6" SP			8" SP			10" SP			12" SP		
		RPM	BHP	OUT FLOW	RPM	BHP	OUT FLOW	RPM	BHP	OUT FLOW	RPM	BHP	OUT FLOW	RPM	BHP	OUT FLOW	RPM	BHP	OUT FLOW	RPM	BHP	OUT FLOW	RPM	BHP	OUT FLOW
600	**2985**	1187	0.15	2200	1437	0.25	2259	1839	0.48	2362															
925	**4602**	1616	0.40	3345	1768	0.51	3368	2100	0.80	3459	2659	1.49	3611												
1250	**6219**	2089	0.86	4505	2202	1.00	4519	2432	1.31	4570	2918	2.12	4692	3342	3.03	4798	3717	4.02	4907						
1575	**7836**	2570	1.61	5649	2672	1.80	5687	2843	2.14	5689	3225	3.01	5809	3613	4.05	5898	3962	5.17	5972						
1900	**9453**	3059	2.71	6795	3148	2.95	6835	3304	3.38	6870	3596	4.27	6904	3920	5.39	7016	4246	6.64	7089						
2225	**11070**	3552	4.24	7940	3631	4.53	7981	3776	5.07	8036	4017	6.03	8037												
2550	**12687**	4048	6.28	9086	4119	6.61	9126	4251	7.25	9186															

XV5 (Extra High Velocity Nozzle)

Nozzle Outlet Area: 0.201 ft²

FAN INLET CFM	NOZ-ZLE OV	0.5" SP			1" SP			2" SP			4" SP			6" SP			8" SP			10" SP			12" SP		
		RPM	BHP	OUT FLOW	RPM	BHP	OUT FLOW	RPM	BHP	OUT FLOW	RPM	BHP	OUT FLOW	RPM	BHP	OUT FLOW	RPM	BHP	OUT FLOW	RPM	BHP	OUT FLOW	RPM	BHP	OUT FLOW
475	**2363**	1132	0.11	1690	1384	0.19	1724	1770	0.36	1788															
775	**3856**	1576	0.30	2719	1736	0.40	2731	2066	0.64	2788	2599	1.18	2876												
1075	**5348**	2073	0.69	3765	2195	0.81	3773	2427	1.08	3795	2898	1.75	3868	3301	2.49	3925	3656	3.28	3999	3971	4.11	4047			
1375	**6841**	2581	1.32	4800	2690	1.50	4824	2869	1.81	4819	3242	2.54	4887	3613	3.42	4937	3946	4.34	4981	4249	5.30	5025			
1675	**8333**	3096	2.29	5831	3192	2.50	5859	3358	2.90	5881	3648	3.69	5880	3959	4.63	5954									
1975	**9826**	3616	3.64	6863	3701	3.90	6891	3855	4.40	6928	4106	5.29	6923												
2275	**11318**	4140	5.47	7896	4216	5.77	7923																		

Class II = Light Blue section

Underlined figures indicate maximum static efficiency.

NOTES:
1. Performance certified is for installation Type A: Free inlet, free outlet.
2. Power rating (BHP) does not include transmission losses.
3. Performance ratings do not include the effects of appurtenances (accessories).
4. Performance ratings do not include the effects of crosswinds.

165 BAIFE

Impeller Type: Airfoil **Max Class I RPM = 2673** **Windband Outlet Area: 3.26 ft²**
Impeller Dia.: 16.50" **Max Class II RPM = 3487** **Tip Speed FPM = 4.32 x RPM**

LV (Low Velocity Nozzle)

Nozzle Outlet Area: 0.974 ft²

FAN INLET CFM	NOZ-ZLE OV	0.5" SP			1" SP			2" SP			3" SP			4" SP			6" SP			8" SP			10" SP		
		RPM	BHP	OUT FLOW	RPM	BHP	OUT FLOW	RPM	BHP	OUT FLOW	RPM	BHP	OUT FLOW	RPM	BHP	OUT FLOW	RPM	BHP	OUT FLOW	RPM	BHP	OUT FLOW	RPM	BHP	OUT FLOW
1125	**1155**	919	0.16	1895	1133	0.29	1962																		
1825	**1874**	1214	0.35	3010	1395	0.55	3056	1680	0.95	3129	1928	1.42	3232	2155	1.93	3360									
2525	**2592**	1539	0.70	4152	1692	0.96	4166	1950	1.50	4234	2163	2.04	4281	2356	2.63	4339	2711	3.93	4493						
3225	**3311**	1881	1.23	5274	2013	1.59	5315	2242	2.25	5339	2443	2.94	5397	2618	3.62	5436	2933	5.08	5521	3219	6.67	5620			
3925	**4030**	2237	2.03	6407	2347	2.45	6439	2552	3.27	6471	2735	4.09	6499	2903	4.93	6548	3196	6.59	6616	3459	8.33	6683			
4625	**4748**	2601	3.15	7546	2693	3.62	7564	2876	4.62	7617	3043	5.57	7626	3198	6.53	7651	3481	8.51	7733						
5325	**5467**	2969	4.65	8685	3048	5.16	8696	3210	6.30	8745	3364	7.44	8779												

LV7 (Low Velocity Nozzle)

Nozzle Outlet Area: 0.974 ft²

FAN INLET CFM	NOZ-ZLE OV	0.5" SP			1" SP			2" SP			3" SP			4" SP			6" SP			8" SP			10" SP		
		RPM	BHP	OUT FLOW	RPM	BHP	OUT FLOW	RPM	BHP	OUT FLOW	RPM	BHP	OUT FLOW	RPM	BHP	OUT FLOW	RPM	BHP	OUT FLOW	RPM	BHP	OUT FLOW	RPM	BHP	OUT FLOW
725	**744**	869	0.09	1192	1123	0.20	1242																		
1275	**1309**	1155	0.19	2045	1347	0.32	2069	1668	0.64	2116	1953	1.05	2181	2177	1.45	2259									
1825	**1874**	1495	0.40	2904	1646	0.56	2926	1916	0.93	2959	2151	1.35	2996	2367	1.83	3029	2769	2.98	3111	3088	4.13	3224	3373	5.34	3335
2375	**2438**	1863	0.74	3764	1982	0.94	3786	2208	1.37	3807	2417	1.85	3837	2609	2.37	3870	2953	3.52	3923	3281	4.92	3969			
2925	**3003**	2246	1.27	4630	2340	1.49	4642	2534	2.01	4681	2714	2.54	4690	2885	3.11	4708	3203	4.38	4764						
3475	**3568**	2636	2.02	5497	2715	2.28	5507	2877	2.85	5536	3038	3.48	5565	3190	4.11	5572	3478	5.48	5604						
4025	**4132**	3030	3.05	6365	3098	3.33	6373	3235	3.95	6391	3378	4.66	6423												

LV5 (Low Velocity Nozzle)

Nozzle Outlet Area: 0.974 ft²

FAN INLET CFM	NOZ-ZLE OV	0.5" SP			1" SP			2" SP			3" SP			4" SP			6" SP			8" SP			10" SP		
		RPM	BHP	OUT FLOW	RPM	BHP	OUT FLOW	RPM	BHP	OUT FLOW	RPM	BHP	OUT FLOW	RPM	BHP	OUT FLOW	RPM	BHP	OUT FLOW	RPM	BHP	OUT FLOW	RPM	BHP	OUT FLOW
525	**539**	872	0.07	835	1130	0.16	852																		
950	**975**	1143	0.14	1521	1356	0.25	1514	1694	0.51	1506	1979	0.84	1528	2206	1.17	1582									
1375	**1412**	1463	0.28	2222	1639	0.41	2204	1938	0.72	2194	2185	1.07	2186	2410	1.47	2181	2813	2.40	2200	3137	3.36	2276	3426	4.37	2354
1800	**1848**	1810	0.50	2914	1956	0.67	2907	2216	1.03	2877	2446	1.44	2872	2651	1.87	2869	3010	2.82	2860	3343	3.97	2847			
2225	**2284**	2175	0.85	3607	2293	1.04	3597	2523	1.48	3585	2728	1.92	3556	2919	2.41	3551	3259	3.48	3546						
2650	**2721**	2548	1.34	4299	2647	1.56	4289	2847	2.06	4281	3034	2.58	4265	3207	3.10	4241									
3075	**3157**	2928	2.01	4994	3013	2.26	4983	3185	2.80	4972	3356	3.41	4967												

MV (Medium Velocity Nozzle)

Nozzle Outlet Area: 0.730 ft²

FAN INLET CFM	NOZ-ZLE OV	0.5" SP			1" SP			2" SP			3" SP			4" SP			6" SP			8" SP			10" SP		
		RPM	BHP	OUT FLOW	RPM	BHP	OUT FLOW	RPM	BHP	OUT FLOW	RPM	BHP	OUT FLOW	RPM	BHP	OUT FLOW	RPM	BHP	OUT FLOW	RPM	BHP	OUT FLOW	RPM	BHP	OUT FLOW
1050	**1438**	921	0.16	2096	1138	0.29	2228																		
1700	**2329**	1212	0.37	3236	1393	0.56	3336	1687	0.97	3538	1932	1.41	3638	2170	1.93	3755									
2350	**3219**	1537	0.74	4399	1688	1.00	4481	1947	1.52	4623	2167	2.07	4771	2366	2.66	4910	2716	3.90	5044						
3000	**4110**	1887	1.33	5616	2006	1.65	5629	2238	2.33	5781	2437	2.98	5877	2617	3.66	5979	2942	5.14	6221	3229	6.67	6358			
3650	**5000**	2244	2.21	6842	2348	2.60	6832	2542	3.40	6901	2729	4.22	7034	2896	5.02	7119	3196	6.67	7285	3466	8.44	7486			
4300	**5890**	2607	3.43	8074	2700	3.89	8051	2866	4.81	8064	3032	5.77	8158	3191	6.75	8274	3471	8.63	8412						
4950	**6781**	2974	5.05	9309	3057	5.59	9278	3207	6.65	9265	3350	7.73	9303												

MV7 (Medium Velocity Nozzle)

Nozzle Outlet Area: 0.730 ft²

FAN INLET CFM	NOZ-ZLE OV	0.5" SP			1" SP			2" SP			3" SP			4" SP			6" SP			8" SP			10" SP		
		RPM	BHP	OUT FLOW	RPM	BHP	OUT FLOW	RPM	BHP	OUT FLOW	RPM	BHP	OUT FLOW	RPM	BHP	OUT FLOW	RPM	BHP	OUT FLOW	RPM	BHP	OUT FLOW	RPM	BHP	OUT FLOW
900	**1233**	966	0.13	1782	1168	0.23	1878																		
1400	**1918**	1265	0.27	2673	1438	0.42	2740	1717	0.74	2889	1950	1.09	2960												
1900	**2603**	1591	0.51	3577	1740	0.71	3642	1987	1.11	3732	2199	1.53	3855	2388	1.99	3945	2727	2.97	4039						
2400	**3288**	1939	0.89	4524	2058	1.14	4529	2284	1.64	4637	2476	2.14	4701	2650	2.66	4791	2962	3.78	4963	3234	4.96	5044			
2900	**3973**	2294	1.44	5479	2397	1.73	5461	2593	2.33	5523	2774	2.94	5609	2934	3.54	5659	3224	4.80	5802	3485	6.14	5953			
3400	**4658**	2654	2.19	6439	2746	2.53	6408	2914	3.22	6415	3081	3.94	6498	3234	4.65	6569									
3900	**5342**	3017	3.19	7400	3100	3.58	7362	3251	4.36	7344	3397	5.16	7381												

MV5 (Medium Velocity Nozzle)

Nozzle Outlet Area: 0.730 ft²

FAN INLET CFM	NOZ-ZLE OV	0.5" SP			1" SP			2" SP			3" SP			4" SP			6" SP			8" SP			10" SP		
		RPM	BHP	OUT FLOW	RPM	BHP	OUT FLOW	RPM	BHP	OUT FLOW	RPM	BHP	OUT FLOW	RPM	BHP	OUT FLOW	RPM	BHP	OUT FLOW	RPM	BHP	OUT FLOW	RPM	BHP	OUT FLOW
675	**925**	963	0.10	1279	1174	0.18	1346																		
1075	**1473**	1259	0.20	1952	1447	0.32	2004	1740	0.58	2114	1977	0.88	2164	2217	1.24	2230									
1475	**2021**	1577	0.37	2628	1746	0.53	2685	2014	0.86	2759	2236	1.22	2849	2431	1.60	2913	2773	2.42	2983						
1875	**2568**	1917	0.63	3336	2058	0.83	3354	2309	1.25	3440	2516	1.67	3493	2699	2.11	3560	3023	3.06	3686	3299	4.05	3745			
2275	**3116**	2267	1.01	4054	2389	1.25	4050	2615	1.76	4114	2812	2.27	4177	2985	2.77	4219	3291	3.83	4327						
2675	**3664**	2621	1.54	4775	2732	1.82	4761	2929	2.39	4782	3117	3.00	4854	3283	3.60	4905									
3075	**4212**	2979	2.22	5498	3080	2.56	5476	3258	3.21	5475	3428	3.89	5519												

Class II = Light Blue section

Underlined figures indicate maximum static efficiency.

NOTES:
1. Performance certified is for installation Type A: Free inlet, free outlet.
2. Power rating (BHP) does not include transmission losses.
3. Performance ratings do not include the effects of appurtenances (accessories).
4. Performance ratings do not include the effects of crosswinds.

HV (High Velocity Nozzle)

Nozzle Outlet Area: 0.487 ft²

FAN INLET CFM	NOZ-ZLE OV	0.5" SP			1" SP			2" SP			3" SP			4" SP			6" SP			8" SP			10" SP		
		RPM	BHP	OUT FLOW	RPM	BHP	OUT FLOW	RPM	BHP	OUT FLOW	RPM	BHP	OUT FLOW	RPM	BHP	OUT FLOW	RPM	BHP	OUT FLOW	RPM	BHP	OUT FLOW	RPM	BHP	OUT FLOW
875	**1797**	899	0.15	2115	1135	0.28	2208																		
1450	**2977**	1202	0.36	3327	1378	0.54	3452	1670	0.92	3575	1951	1.38	3677	2213	1.90	3651									
2025	**4158**	1537	0.76	4559	1685	1.00	4649	1937	1.49	4833	2145	1.99	4911	2352	2.56	4998	2754	3.86	5142	3126	5.33	5089			
2600	**5339**	1890	1.42	5828	2017	1.73	5880	2237	2.33	6017	2432	2.96	6162	2606	3.60	6266	2924	4.96	6370	3243	6.53	6518			
3175	**6520**	2253	2.41	7117	2362	2.77	7126	2560	3.52	7241	2734	4.25	7348	2896	5.02	7464	3187	6.58	7653	3445	8.20	7725			
3750	**7700**	2622	3.79	8413	2718	4.23	8403	2895	5.10	8471	3056	5.98	8571	3203	6.85	8661	3476	8.65	8860						
4325	**8881**	2996	5.66	9716	3081	6.16	9693	3240	7.16	9716	3388	8.17	9800												

HV7 (High Velocity Nozzle)

Nozzle Outlet Area: 0.487 ft²

FAN INLET CFM	NOZ-ZLE OV	0.5" SP			1" SP			2" SP			3" SP			4" SP			6" SP			8" SP			10" SP		
		RPM	BHP	OUT FLOW	RPM	BHP	OUT FLOW	RPM	BHP	OUT FLOW	RPM	BHP	OUT FLOW	RPM	BHP	OUT FLOW	RPM	BHP	OUT FLOW	RPM	BHP	OUT FLOW	RPM	BHP	OUT FLOW
775	**1591**	934	0.12	1871	1154	0.22	1939																		
1225	**2515**	1231	0.27	2827	1403	0.40	2929	1685	0.70	3015	1964	1.08	3098	2231	1.53	3084									
1675	**3439**	1556	0.52	3805	1701	0.70	3874	1947	1.07	4018	2152	1.47	4069	2358	1.91	4146	2764	2.98	4244						
2125	**4363**	1896	0.94	4807	2022	1.16	4851	2239	1.61	4959	2431	2.09	5076	2598	2.57	5134	2920	3.64	5228	3242	4.90	5339			
2575	**5287**	2246	1.54	5830	2355	1.81	5837	2551	2.35	5927	2723	2.90	6013	2884	3.48	6113	3165	4.65	6225	3431	5.93	6297			
3025	**6211**	2601	2.38	6857	2697	2.69	6844	2874	3.33	6903	3033	3.97	6978	3179	4.61	7053	3451	5.97	7222						
3475	**7136**	2960	3.49	7889	3045	3.85	7862	3205	4.57	7885	3353	5.31	7954												

HV5 (High Velocity Nozzle)

Nozzle Outlet Area: 0.487 ft²

FAN INLET CFM	NOZ-ZLE OV	0.5" SP			1" SP			2" SP			3" SP			4" SP			6" SP			8" SP			10" SP		
		RPM	BHP	OUT FLOW	RPM	BHP	OUT FLOW	RPM	BHP	OUT FLOW	RPM	BHP	OUT FLOW	RPM	BHP	OUT FLOW	RPM	BHP	OUT FLOW	RPM	BHP	OUT FLOW	RPM	BHP	OUT FLOW
575	**1181**	909	0.08	1328	1143	0.17	1380																		
950	**1951**	1208	0.19	2096	1393	0.30	2175	1685	0.54	2236	1964	0.85	2294	2229	1.23	2272									
1325	**2721**	1533	0.37	2874	1693	0.52	2927	1955	0.83	3036	2166	1.15	3071	2372	1.52	3124	2771	2.39	3198	3149	3.45	3170			
1700	**3491**	1872	0.67	3665	2015	0.86	3704	2251	1.23	3786	2454	1.63	3875	2628	2.03	3920	2951	2.92	3983	3265	3.95	4066			
2075	**4261**	2222	1.10	4476	2348	1.33	4486	2565	1.79	4555	2751	2.25	4622	2921	2.73	4697	3213	3.72	4785	3478	4.78	4828			
2450	**5031**	2578	1.71	5290	2690	1.98	5283	2890	2.52	5333	3064	3.06	5390	3221	3.61	5447									
2825	**5801**	2938	2.52	6107	3039	2.83	6091	3222	3.45	6114	3386	4.08	6167												

XV (Extra High Velocity Nozzle)

Nozzle Outlet Area: 0.243 ft²

FAN INLET CFM	NOZ-ZLE OV	0.5" SP			1" SP			2" SP			3" SP			4" SP			6" SP			8" SP			10" SP		
		RPM	BHP	OUT FLOW	RPM	BHP	OUT FLOW	RPM	BHP	OUT FLOW	RPM	BHP	OUT FLOW	RPM	BHP	OUT FLOW	RPM	BHP	OUT FLOW	RPM	BHP	OUT FLOW	RPM	BHP	OUT FLOW
825	**3395**	1084	0.26	2736	1324	0.41	2805																		
1175	**4835**	1351	0.54	3813	1538	0.73	3893	1877	1.18	3992	2158	1.68	4110												
1525	**6276**	1666	1.04	4957	1798	1.25	4966	2087	1.78	5076	2347	2.35	5147	2579	2.97	5244									
1875	**7716**	1990	1.80	6084	2099	2.05	6089	2325	2.62	6164	2561	3.29	6241	2778	3.99	6301	3162	5.49	6440						
2225	**9156**	2318	2.86	7200	2420	3.19	7236	2599	3.81	7237	2796	4.52	7334	2995	5.31	7394	3360	6.98	7495						
2575	**10597**	2650	4.30	8314	2743	4.69	8359	2899	5.39	8357	3061	6.15	8397	3232	6.99	8483									
2925	**12037**	2984	6.15	9425	3070	6.63	9477	3218	7.47	9510	3350	8.24	9493												

XV7 (Extra High Velocity Nozzle)

Nozzle Outlet Area: 0.243 ft²

FAN INLET CFM	NOZ-ZLE OV	0.5" SP			1" SP			2" SP			3" SP			4" SP			6" SP			8" SP			10" SP		
		RPM	BHP	OUT FLOW	RPM	BHP	OUT FLOW	RPM	BHP	OUT FLOW	RPM	BHP	OUT FLOW	RPM	BHP	OUT FLOW	RPM	BHP	OUT FLOW	RPM	BHP	OUT FLOW	RPM	BHP	OUT FLOW
725	**2984**	1037	0.18	2452	1282	0.30	2524																		
1075	**4424**	1326	0.41	3549	1501	0.55	3622	1840	0.91	3719	2129	1.32	3843												
1425	**5864**	1669	0.84	4705	1787	0.99	4707	2056	1.40	4820	2317	1.87	4897	2550	2.37	4971	2960	3.49	5118						
1775	**7305**	2020	1.50	5839	2122	1.71	5863	2320	2.13	5903	2539	2.64	6001	2754	3.21	6059	3139	4.45	6177	3486	5.82	6333			
2125	**8745**	2375	2.46	6963	2470	2.72	7012	2628	3.18	7014	2802	3.73	7082	2984	4.34	7165	3343	5.71	7270						
2475	**10185**	2735	3.76	8090	2821	4.09	8144	2967	4.66	8177	3102	5.20	8178	3253	5.84	8244									
2825	**11626**	3098	5.48	9217	3175	5.86	9268	3314	6.55	9331	3432	7.16	9330												

XV5 (Extra High Velocity Nozzle)

Nozzle Outlet Area: 0.243 ft²

FAN INLET CFM	NOZ-ZLE OV	0.5" SP			1" SP			2" SP			3" SP			4" SP			6" SP			8" SP			10" SP		
		RPM	BHP	OUT FLOW	RPM	BHP	OUT FLOW	RPM	BHP	OUT FLOW	RPM	BHP	OUT FLOW	RPM	BHP	OUT FLOW	RPM	BHP	OUT FLOW	RPM	BHP	OUT FLOW	RPM	BHP	OUT FLOW
575	**2366**	995	0.13	1883	1236	0.23	1925																		
875	**3601**	1270	0.29	2802	1455	0.41	2851	1789	0.70	2907	2064	1.02	2982												
1175	**4835**	1603	0.60	3771	1732	0.74	3767	2008	1.07	3838	2264	1.45	3884	2488	1.85	3922	2880	2.74	4029						
1475	**6070**	1944	1.09	4720	2056	1.26	4730	2267	1.62	4752	2488	2.05	4814	2700	2.52	4850	3071	3.51	4911	3400	4.59	5007			
1775	**7305**	2291	1.79	5664	2396	2.02	5696	2566	2.42	5683	2748	2.88	5728	2931	3.38	5781	3284	4.51	5844						
2075	**8539**	2643	2.76	6609	2737	3.03	6642	2896	3.53	6656	3040	4.00	6647	3196	4.54	6688									
2375	**9774**	2997	4.03	7550	3083	4.36	7586	3235	4.96	7624	3361	5.48	7610												

Class II = Light Blue section

Underlined figures indicate maximum static efficiency.

NOTES:

1. Performance certified is for installation Type A: Free inlet, free outlet.
2. Power rating (BHP) does not include transmission losses.
3. Performance ratings do not include the effects of appurtenances (accessories).
4. Performance ratings do not include the effects of crosswinds.

182 BAIFE

Impeller Type: Airfoil **Max Class I RPM = 2294** **Max Class III RPM = 3701** **Windband Outlet Area: 3.99 ft²**
Impeller Dia.: 18.25" **Max Class II RPM = 2902** **Tip Speed FPM = 4.78 x RPM**

LV (Low Velocity Nozzle)

Nozzle Outlet Area: 1.20 ft²

FAN INLET CFM	NOZ-ZLE OV	1" SP			3" SP			5" SP			7" SP			9" SP			11" SP			13" SP			15" SP		
		RPM	BHP	OUT FLOW	RPM	BHP	OUT FLOW	RPM	BHP	OUT FLOW	RPM	BHP	OUT FLOW	RPM	BHP	OUT FLOW	RPM	BHP	OUT FLOW	RPM	BHP	OUT FLOW	RPM	BHP	OUT FLOW
1475	1234	925	0.34	2600																					
2950	2469	1249	0.91	5003	1663	2.04	5141	2025	3.37	5220	2357	4.92	5247												
4425	3703	1687	2.16	7495	1984	3.66	7552	2268	5.35	7647	2526	7.13	7716	2774	9.06	7787	3009	11.11	7831	3237	13.33	7880	3456	15.69	7891
5900	4937	2159	4.39	10096	2386	6.27	9931	2609	8.32	10061	2830	10.54	10136	3035	12.80	10199	3229	15.13	10252	3421	17.60	10304	3607	20.15	10351
7375	6172	2644	7.93	12654	2831	10.23	12464	3011	12.63	12431	3188	15.17	12541	3367	17.86	12612	3542	20.66	12665						
8850	7406	3136	13.08	15201	3297	15.86	15081	3449	18.64	14915	3598	21.53	14907												
10325	8640	3633	20.18	17746																					

LV7 (Low Velocity Nozzle)

Nozzle Outlet Area: 1.20 ft²

FAN INLET CFM	NOZ-ZLE OV	1" SP			3" SP			5" SP			7" SP			9" SP			11" SP			13" SP			15" SP		
		RPM	BHP	OUT FLOW	RPM	BHP	OUT FLOW	RPM	BHP	OUT FLOW	RPM	BHP	OUT FLOW	RPM	BHP	OUT FLOW	RPM	BHP	OUT FLOW	RPM	BHP	OUT FLOW	RPM	BHP	OUT FLOW
1200	1004	954	0.27	2033																					
2325	1946	1298	0.66	3877	1714	1.56	3964	2057	2.61	3899	2383	3.78	3936												
3450	2887	1715	1.43	5637	2051	2.66	5812	2336	3.99	5887	2593	5.40	5883	2828	6.90	5828	3052	8.51	5793	3277	10.25	5864	3493	11.99	5853
4575	3828	2170	2.76	7444	2443	4.32	7569	2688	5.98	7692	2910	7.69	7773	3118	9.47	7804	3315	11.33	7808	3502	13.27	7794	3679	15.26	7750
5700	4770	2641	4.83	9260	2864	6.71	9329	3080	8.71	9453	3278	10.77	9552	3462	12.87	9632	3637	15.02	9687						
6825	5711	3121	7.82	11082	3309	10.02	11123	3493	12.33	11202	3673	14.75	11309												
7950	6653	3606	11.91	12904																					

LV5 (Low Velocity Nozzle)

Nozzle Outlet Area: 1.20 ft²

FAN INLET CFM	NOZ-ZLE OV	1" SP			3" SP			5" SP			7" SP			9" SP			11" SP			13" SP			15" SP		
		RPM	BHP	OUT FLOW	RPM	BHP	OUT FLOW	RPM	BHP	OUT FLOW	RPM	BHP	OUT FLOW	RPM	BHP	OUT FLOW	RPM	BHP	OUT FLOW	RPM	BHP	OUT FLOW	RPM	BHP	OUT FLOW
850	711	950	0.20	1418																					
1750	1464	1284	0.48	2949	1730	1.23	2910	2081	2.07	2885	2382	2.99	2741												
2650	2218	1711	1.03	4419	2059	2.04	4438	2364	3.16	4407	2635	4.34	4407	2878	5.58	4419	3102	6.87	4387	3310	8.22	4306	3507	9.62	4206
3550	2971	2173	2.00	5895	2460	3.26	5973	2713	4.63	5959	2947	6.09	5918	3170	7.61	5904	3378	9.18	5900	3571	10.78	5905			
4450	3724	2653	3.52	7384	2894	5.04	7427	3114	6.66	7493	3318	8.37	7490	3509	10.16	7443	3694	12.00	7417						
5350	4477	3143	5.73	8877	3349	7.51	8897	3542	9.38	8949															
6250	5230	3639	8.78	10372																					

MV (Medium Velocity Nozzle)

Nozzle Outlet Area: 0.896 ft²

FAN INLET CFM	NOZ-ZLE OV	1" SP			3" SP			5" SP			7" SP			9" SP			11" SP			13" SP			15" SP		
		RPM	BHP	OUT FLOW	RPM	BHP	OUT FLOW	RPM	BHP	OUT FLOW	RPM	BHP	OUT FLOW	RPM	BHP	OUT FLOW	RPM	BHP	OUT FLOW	RPM	BHP	OUT FLOW	RPM	BHP	OUT FLOW
1075	1200	908	0.27	2248																					
2475	2762	1186	0.78	5008	1637	1.83	5076	2034	3.13	5127	2380	4.64	5229	2681	6.31	5135									
3875	4325	1619	1.99	7729	1940	3.41	7816	2236	4.98	7868	2516	6.71	7961	2780	8.59	7925	3031	10.64	7949	3273	12.87	8083	3499	15.20	8170
5275	5887	2096	4.25	10513	2346	6.09	10609	2579	8.04	10662	2799	10.08	10612	3015	12.26	10690	3225	14.56	10797	3428	16.97	10839	3624	19.47	10814
6675	7450	2590	7.94	13307	2793	10.22	13321	2987	12.58	13435	3174	15.04	13508	3351	17.55	13466	3524	20.15	13429	3696	22.87	13475			
8075	9012	3094	13.45	16111	3264	16.16	16095	3429	18.96	16141	3589	21.82	16240												
9475	10575	3602	21.13	18908																					

MV7 (Medium Velocity Nozzle)

Nozzle Outlet Area: 0.896 ft²

FAN INLET CFM	NOZ-ZLE OV	1" SP			3" SP			5" SP			7" SP			9" SP			11" SP			13" SP			15" SP		
		RPM	BHP	OUT FLOW	RPM	BHP	OUT FLOW	RPM	BHP	OUT FLOW	RPM	BHP	OUT FLOW	RPM	BHP	OUT FLOW	RPM	BHP	OUT FLOW	RPM	BHP	OUT FLOW	RPM	BHP	OUT FLOW
1150	1283	961	0.27	2330																					
2225	2483	1308	0.69	4507	1722	1.57	4487	2075	2.58	4545	2388	3.74	4431												
3300	3683	1733	1.52	6578	2065	2.74	6702	2348	4.04	6684	2605	5.42	6660	2849	6.88	6702	3077	8.43	6735	3289	10.08	6668	3500	11.83	6582
4375	4883	2191	2.96	8687	2464	4.52	8818	2707	6.16	8888	2928	7.84	8882	3134	9.59	8858	3329	11.41	8827	3519	13.30	8835			
5450	6083	2665	5.21	10809	2892	7.09	10877	3105	9.09	11005	3301	11.12	11064	3485	13.19	11073	3659	15.30	11062						
6525	7282	3148	8.48	12937	3342	10.69	12976	3526	12.99	13058															
7600	8482	3637	12.97	15071																					

MV5 (Medium Velocity Nozzle)

Nozzle Outlet Area: 0.896 ft²

FAN INLET CFM	NOZ-ZLE OV	1" SP			3" SP			5" SP			7" SP			9" SP			11" SP			13" SP			15" SP		
		RPM	BHP	OUT FLOW	RPM	BHP	OUT FLOW	RPM	BHP	OUT FLOW	RPM	BHP	OUT FLOW	RPM	BHP	OUT FLOW	RPM	BHP	OUT FLOW	RPM	BHP	OUT FLOW	RPM	BHP	OUT FLOW
800	893	944	0.19	1484																					
1650	1842	1278	0.48	3186	1727	1.21	3168	2075	2.02	3090	2393	2.95	3249												
2500	2790	1697	1.05	4726	2053	2.04	4876	2364	3.13	4891	2630	4.26	4788	2864	5.44	4660	3090	6.71	4660	3308	8.06	4744	3517	9.48	4856
3350	3739	2153	2.04	6305	2445	3.29	6400	2704	4.64	6515	2943	6.06	6576	3170	7.54	6552	3377	9.05	6496	3563	10.58	6391			
4200	4687	2629	3.60	7903	2871	5.11	7945	3097	6.72	8039	3304	8.40	8126	3500	10.15	8208	3689	11.94	8242						
5050	5636	3114	5.88	9503	3320	7.64	9517	3516	9.50	9577															
5900	6585	3604	9.01	11102																					

Class II = Light Blue section Class III = Dark Blue section Underlined figures indicate maximum static efficiency.

NOTES:
1. Performance certified is for installation Type A: Free inlet, free outlet.
2. Power rating (BHP) does not include transmission losses.
3. Performance ratings do not include the effects of appurtenances (accessories).
4. Performance ratings do not include the effects of crosswinds.

HV (High Velocity Nozzle)

Nozzle Outlet Area: 0.596 ft²

FAN INLET CFM	NOZ-ZLE OV	1" SP			3" SP			5" SP			7" SP			9" SP			11" SP			13" SP			15" SP		
		RPM	BHP	OUT FLOW	RPM	BHP	OUT FLOW	RPM	BHP	OUT FLOW	RPM	BHP	OUT FLOW	RPM	BHP	OUT FLOW	RPM	BHP	OUT FLOW	RPM	BHP	OUT FLOW	RPM	BHP	OUT FLOW
875	1468	931	0.26	2268																					
2075	3482	1202	0.76	5155	1691	1.78	5311	2095	3.05	5372	2436	4.50	5367	2727	6.05	5198									
3275	5495	1635	2.03	7991	1985	3.37	8207	2309	4.90	8340	2603	6.59	8379	2874	8.43	8394	3130	10.45	8444	3371	12.62	8503	3594	14.86	8515
4475	7508	2116	4.43	10924	2382	6.14	10988	2637	8.00	11156	2882	10.01	11311	3116	12.13	11379	3338	14.37	11417	3549	16.72	11440			
5675	9522	2616	8.39	13878	2833	10.54	13848	3039	12.73	13948	3241	15.07	14074	3438	17.51	14215	3630	20.08	14329						
6875	11535	3125	14.31	16831	3308	16.90	16769	3484	19.53	16796	3653	22.18	16879												
8075	13549	3641	22.64	19792																					

HV7 (High Velocity Nozzle)

Nozzle Outlet Area: 0.596 ft²

FAN INLET CFM	NOZ-ZLE OV	1" SP			3" SP			5" SP			7" SP			9" SP			11" SP			13" SP			15" SP		
		RPM	BHP	OUT FLOW	RPM	BHP	OUT FLOW	RPM	BHP	OUT FLOW	RPM	BHP	OUT FLOW	RPM	BHP	OUT FLOW	RPM	BHP	OUT FLOW	RPM	BHP	OUT FLOW	RPM	BHP	OUT FLOW
1050	1762	985	0.28	2675																					
1975	3314	1326	0.73	4923	1749	1.58	5003	2120	2.59	5131	2443	3.73	4997												
2900	4866	1744	1.64	7100	2082	2.81	7262	2371	4.05	7302	2638	5.37	7362	2898	6.84	7471	3138	8.38	7534	3362	10.00	7496	3578	11.74	7359
3825	6418	2193	3.24	9312	2472	4.71	9484	2720	6.27	9572	2948	7.89	9606	3159	9.54	9640	3361	11.26	9676	3562	13.10	9742			
4750	7970	2659	5.73	11545	2892	7.51	11650	3109	9.38	11803	3310	11.31	11878	3498	13.29	11899	3678	15.31	11926						
5675	9522	3133	9.32	13780	3333	11.43	13853	3523	13.61	13971															
6600	11074	3612	14.24	16017																					

HV5 (High Velocity Nozzle)

Nozzle Outlet Area: 0.596 ft²

FAN INLET CFM	NOZ-ZLE OV	1" SP			3" SP			5" SP			7" SP			9" SP			11" SP			13" SP			15" SP		
		RPM	BHP	OUT FLOW	RPM	BHP	OUT FLOW	RPM	BHP	OUT FLOW	RPM	BHP	OUT FLOW	RPM	BHP	OUT FLOW	RPM	BHP	OUT FLOW	RPM	BHP	OUT FLOW	RPM	BHP	OUT FLOW
650	1091	926	0.17	1573																					
1450	2433	1252	0.47	3497	1701	1.14	3549	2071	1.94	3520	2402	2.86	3608	2708	3.90	3863									
2250	3775	1679	1.09	5393	2041	2.03	5424	2341	3.04	5493	2610	4.13	5505	2859	5.30	5464	3095	6.55	5456	3320	7.88	5468	3535	9.29	5513
3050	5117	2147	2.21	7270	2447	3.44	7354	2705	4.73	7353	2938	6.06	7376	3154	7.45	7442	3358	8.90	7478	3551	10.40	7461			
3850	6460	2635	4.00	9149	2882	5.51	9232	3113	7.10	9287	3321	8.72	9293	3513	10.37	9283	3695	12.06	9307						
4650	7802	3134	6.66	11031	3342	8.43	11106	3543	10.30	11169															
5450	9144	3639	10.34	12915																					

XV (Extra High Velocity Nozzle)

Nozzle Outlet Area: 0.299 ft²

FAN INLET CFM	NOZ-ZLE OV	1" SP			3" SP			5" SP			7" SP			9" SP			11" SP			13" SP			15" SP		
		RPM	BHP	OUT FLOW	RPM	BHP	OUT FLOW	RPM	BHP	OUT FLOW	RPM	BHP	OUT FLOW	RPM	BHP	OUT FLOW	RPM	BHP	OUT FLOW	RPM	BHP	OUT FLOW	RPM	BHP	OUT FLOW
775	2592	1050	0.34	2486																					
1450	4849	1387	0.90	4494	1864	1.94	4618	2241	3.17	4773	2569	4.51	4904												
2125	7107	1788	2.06	6577	2196	3.45	6648	2521	4.94	6706	2809	6.58	6793	3073	8.35	6908	3316	10.22	7015	3545	12.16	7101			
2800	9365	2227	4.10	8645	2565	5.82	8646	2865	7.70	8752	3124	9.62	8805	3358	11.63	8843	3579	13.76	8908						
3475	11622	2685	7.30	10691	2968	9.35	10745	3231	11.55	10738	3475	13.88	10831	3696	16.25	10895									
4150	13880	3154	11.94	12738	3396	14.32	12840	3627	16.86	12818															
4825	16137	3629	18.28	14786																					

XV7 (Extra High Velocity Nozzle)

Nozzle Outlet Area: 0.299 ft²

FAN INLET CFM	NOZ-ZLE OV	1" SP			3" SP			5" SP			7" SP			9" SP			11" SP			13" SP			15" SP		
		RPM	BHP	OUT FLOW	RPM	BHP	OUT FLOW	RPM	BHP	OUT FLOW	RPM	BHP	OUT FLOW	RPM	BHP	OUT FLOW	RPM	BHP	OUT FLOW	RPM	BHP	OUT FLOW	RPM	BHP	OUT FLOW
750	2508	1052	0.28	2477																					
1350	4515	1369	0.71	4273	1841	1.54	4435	2240	2.57	4491															
1950	6522	1762	1.59	6114	2135	2.63	6188	2464	3.81	6318	2770	5.14	6446	3052	6.62	6518	3306	8.22	6464	3548	9.92	6498			
2550	8528	2191	3.12	7954	2504	4.41	8052	2776	5.79	8094	3031	7.28	8170	3277	8.89	8293	3511	10.61	8385						
3150	10535	2637	5.48	9794	2896	7.01	9891	3143	8.66	9959	3363	10.37	9991	3571	12.15	10024									
3750	12542	3093	8.88	11639	3312	10.66	11728	3528	12.55	11799															
4350	14548	3555	13.52	13488																					

XV5 (Extra High Velocity Nozzle)

Nozzle Outlet Area: 0.134 ft²

FAN INLET CFM	NOZ-ZLE OV	1" SP			3" SP			5" SP			7" SP			9" SP			11" SP			13" SP			15" SP		
		RPM	BHP	OUT FLOW	RPM	BHP	OUT FLOW	RPM	BHP	OUT FLOW	RPM	BHP	OUT FLOW	RPM	BHP	OUT FLOW	RPM	BHP	OUT FLOW	RPM	BHP	OUT FLOW	RPM	BHP	OUT FLOW
475	1589	961	0.17	1516																					
1025	3428	1256	0.46	3147	1738	1.08	3224	2138	1.87	3275	2486	2.77	3369	2795	3.78	3495									
1575	5268	1668	1.11	4815	2038	1.92	4821	2364	2.84	4903	2658	3.88	4947	2930	5.02	4979	3187	6.26	5024	3428	7.57	5066	3655	8.96	5127
2125	7107	2120	2.29	6468	2431	3.36	6541	2693	4.45	6512	2940	5.63	6535	3178	6.91	6613	3401	8.26	6655	3613	9.71	6678			
2675	8946	2594	4.21	8130	2847	5.50	8181	3088	6.87	8237	3298	8.24	8213	3496	9.66	8190	3692	11.17	8224						
3225	10786	3079	7.05	9795	3290	8.55	9828	3499	10.15	9882	3698	11.81	9928												
3775	12625	3570	10.99	11460																					

Class II = Light Blue section

Class III = Dark Blue section

Underlined figures indicate maximum static efficiency.

NOTES:

1. Performance certified is for installation Type A: Free inlet, free outlet.
2. Power rating (BHP) does not include transmission losses.
3. Performance ratings do not include the effects of appurtenances (accessories).
4. Performance ratings do not include the effects of crosswinds.

200 BAIFE

Impeller Type: Airfoil **Max Class I RPM = 2093** **Max Class III RPM = 3377** **Windband Outlet Area: 4.80 ft²**
Impeller Dia.: 20.00" **Max Class II RPM = 2648** **Tip Speed FPM = 5.24 x RPM**

LV (Low Velocity Nozzle)

Nozzle Outlet Area: 1.43 ft²

FAN INLET CFM	NOZ-ZLE OV	1" SP			3" SP			5" SP			7" SP			9" SP			11" SP			13" SP			15" SP		
		RPM	BHP	OUT FLOW	RPM	BHP	OUT FLOW	RPM	BHP	OUT FLOW	RPM	BHP	OUT FLOW	RPM	BHP	OUT FLOW	RPM	BHP	OUT FLOW	RPM	BHP	OUT FLOW	RPM	BHP	OUT FLOW
1775	1237	844	0.40	3121																					
3550	2474	1141	1.10	6018	1518	2.46	6180	1849	4.06	6296	2151	5.92	6316												
5325	3711	1542	2.60	9021	1813	4.41	9091	2071	6.44	9198	2307	8.59	9292	2532	10.89	9364	2747	13.37	9432	2954	16.03	9472	3154	18.87	9496
7100	4948	1974	5.31	12151	2181	7.56	11957	2383	10.02	12102	2584	12.68	12188	2772	15.43	12274	2949	18.23	12340	3124	21.19	12404	3293	24.25	12455
8875	6185	2417	9.57	15226	2588	12.35	15006	2751	15.23	14957	2913	18.29	15093	3076	21.53	15178	3235	24.88	15238						
10650	7422	2867	15.80	18292	3014	19.15	18152	3152	22.49	17952	3288	25.96	17941												
12425	8659	3321	24.37	21352																					

LV7 (Low Velocity Nozzle)

Nozzle Outlet Area: 1.43 ft²

FAN INLET CFM	NOZ-ZLE OV	1" SP			3" SP			5" SP			7" SP			9" SP			11" SP			13" SP			15" SP		
		RPM	BHP	OUT FLOW	RPM	BHP	OUT FLOW	RPM	BHP	OUT FLOW	RPM	BHP	OUT FLOW	RPM	BHP	OUT FLOW	RPM	BHP	OUT FLOW	RPM	BHP	OUT FLOW	RPM	BHP	OUT FLOW
1450	1010	872	0.32	2457																					
2800	1951	1187	0.80	4672	1566	1.89	4778	1879	3.14	4708	2175	4.55	4741												
4150	2892	1567	1.72	6780	1873	3.20	6990	2133	4.80	7081	2367	6.49	7074	2582	8.31	7016	2786	10.24	6970	2990	12.32	7039	3188	14.42	7046
5500	3833	1982	3.32	8948	2231	5.20	9101	2454	7.19	9246	2657	9.25	9347	2847	11.40	9386	3026	13.63	9386	3196	15.94	9365	3358	18.34	9318
6850	4774	2411	5.81	11125	2614	8.06	11206	2812	10.48	11363	2992	12.94	11478	3160	15.46	11575	3320	18.06	11643						
8200	5714	2849	9.40	13312	3020	12.04	13359	3189	14.83	13461	3353	17.73	13591												
9550	6655	3292	14.33	15503																					

LV5 (Low Velocity Nozzle)

Nozzle Outlet Area: 1.43 ft²

FAN INLET CFM	NOZ-ZLE OV	1" SP			3" SP			5" SP			7" SP			9" SP			11" SP			13" SP			15" SP		
		RPM	BHP	OUT FLOW	RPM	BHP	OUT FLOW	RPM	BHP	OUT FLOW	RPM	BHP	OUT FLOW	RPM	BHP	OUT FLOW	RPM	BHP	OUT FLOW	RPM	BHP	OUT FLOW	RPM	BHP	OUT FLOW
1025	714	867	0.24	1705																					
2100	1463	1171	0.58	3537	1578	1.47	3492	1899	2.48	3466	2174	3.59	3298												
3175	2213	1558	1.23	5293	1877	2.44	5319	2155	3.78	5279	2403	5.20	5284	2625	6.69	5299	2829	8.24	5255	3019	9.85	5157	3199	11.54	5038
4250	2962	1978	2.39	7062	2240	3.89	7151	2471	5.54	7131	2685	7.29	7083	2889	9.10	7068	3079	10.98	7064	3256	12.92	7076			
5325	3711	2413	4.19	8839	2633	6.00	8887	2835	7.94	8968	3021	9.99	8959	3196	12.14	8905	3365	14.34	8873						
6400	4460	2858	6.82	10624	3046	8.94	10645	3222	11.18	10705															
7475	5209	3307	10.42	12406																					

MV (Medium Velocity Nozzle)

Nozzle Outlet Area: 1.08 ft²

FAN INLET CFM	NOZ-ZLE OV	1" SP			3" SP			5" SP			7" SP			9" SP			11" SP			13" SP			15" SP		
		RPM	BHP	OUT FLOW	RPM	BHP	OUT FLOW	RPM	BHP	OUT FLOW	RPM	BHP	OUT FLOW	RPM	BHP	OUT FLOW	RPM	BHP	OUT FLOW	RPM	BHP	OUT FLOW	RPM	BHP	OUT FLOW
1300	1208	829	0.33	2717																					
3000	2788	1088	0.96	6068	1497	2.22	6155	1857	3.78	6191	2173	5.61	6339	2447	7.61	6208									
4700	4368	1489	2.45	9375	1780	4.16	9487	2047	6.06	9527	2301	8.15	9646	2541	10.41	9615	2769	12.88	9640	2988	15.55	9758	3195	18.37	9903
6400	5948	1930	5.25	12757	2156	7.48	12867	2367	9.83	12938	2566	12.30	12875	2762	14.94	12964	2952	17.71	13090	3136	20.62	13150	3314	23.64	13131
8100	7528	2386	9.81	16150	2569	12.56	16159	2745	15.43	16295	2914	18.41	16386	3075	21.45	16350	3231	24.58	16294						
9800	9108	2851	16.63	19552	3005	19.92	19534	3154	23.31	19582	3299	26.78	19700												
11500	10688	3321	26.17	22958																					

MV7 (Medium Velocity Nozzle)

Nozzle Outlet Area: 1.08 ft²

FAN INLET CFM	NOZ-ZLE OV	1" SP			3" SP			5" SP			7" SP			9" SP			11" SP			13" SP			15" SP		
		RPM	BHP	OUT FLOW	RPM	BHP	OUT FLOW	RPM	BHP	OUT FLOW	RPM	BHP	OUT FLOW	RPM	BHP	OUT FLOW	RPM	BHP	OUT FLOW	RPM	BHP	OUT FLOW	RPM	BHP	OUT FLOW
1375	1278	876	0.32	2788																					
2650	2463	1188	0.81	5374	1567	1.87	5345	1890	3.08	5413	2177	4.46	5260												
3925	3648	1569	1.78	7824	1874	3.23	7971	2134	4.79	7951	2369	6.44	7916	2594	8.19	7984	2802	10.03	8010	2997	12.02	7928	3191	14.12	7827
5200	4833	1981	3.46	10324	2232	5.32	10484	2455	7.26	10561	2658	9.27	10553	2847	11.36	10522	3026	13.53	10487	3201	15.78	10505	3371	18.10	10558
6475	6018	2408	6.09	12844	2617	8.32	12927	2813	10.70	13083	2993	13.11	13149	3161	15.56	13150	3322	18.09	13146						
7750	7203	2843	9.88	15369	3021	12.49	15412	3192	15.26	15523	3354	18.11	15650												
9025	8388	3283	15.09	17897																					

MV5 (Medium Velocity Nozzle)

Nozzle Outlet Area: 1.08 ft²

FAN INLET CFM	NOZ-ZLE OV	1" SP			3" SP			5" SP			7" SP			9" SP			11" SP			13" SP			15" SP		
		RPM	BHP	OUT FLOW	RPM	BHP	OUT FLOW	RPM	BHP	OUT FLOW	RPM	BHP	OUT FLOW	RPM	BHP	OUT FLOW	RPM	BHP	OUT FLOW	RPM	BHP	OUT FLOW	RPM	BHP	OUT FLOW
950	883	859	0.23	1761																					
1975	1836	1163	0.58	3809	1574	1.44	3788	1892	2.42	3699	2183	3.54	3897												
3000	2788	1547	1.26	5669	1872	2.45	5847	2156	3.75	5864	2399	5.11	5742	2613	6.53	5592	2819	8.06	5590	3018	9.67	5693	3209	11.38	5829
4025	3741	1966	2.45	7578	2232	3.95	7690	2468	5.58	7827	2686	7.29	7900	2893	9.06	7870	3082	10.88	7804	3252	12.72	7680			
5050	4693	2401	4.34	9500	2622	6.15	9551	2828	8.08	9664	3017	10.10	9769	3196	12.21	9869	3368	14.36	9909						
6075	5646	2845	7.09	11428	3034	9.21	11449	3212	11.45	11517															
7100	6599	3295	10.88	13361																					

Class II = Light Blue section Class III = Dark Blue section Underlined figures indicate maximum static efficiency.

NOTES:
1. Performance certified is for installation Type A: Free inlet, free outlet.
2. Power rating (BHP) does not include transmission losses.
3. Performance ratings do not include the effects of appurtenances (accessories).
4. Performance ratings do not include the effects of crosswinds.

HV (High Velocity Nozzle)

Nozzle Outlet Area: 0.716 ft²

FAN INLET CFM	NOZ-ZLE OV	1" SP			3" SP			5" SP			7" SP			9" SP			11" SP			13" SP			15" SP		
		RPM	BHP	OUT FLOW	RPM	BHP	OUT FLOW	RPM	BHP	OUT FLOW	RPM	BHP	OUT FLOW	RPM	BHP	OUT FLOW	RPM	BHP	OUT FLOW	RPM	BHP	OUT FLOW	RPM	BHP	OUT FLOW
1075	1501	852	0.32	2799																					
2500	3492	1099	0.92	6211	1544	2.15	6395	1913	3.68	6490	2224	5.42	6483	2489	7.28	6262	2729	9.29	6104						
3925	5482	1490	2.42	9581	1809	4.03	9833	2105	5.87	9988	2374	7.90	10041	2621	10.10	10050	2855	12.53	10113	3075	15.12	10183	3279	17.83	10212
5350	7472	1923	5.26	13058	2167	7.31	13138	2401	9.54	13345	2625	11.94	13528	2839	14.48	13605	3042	17.16	13652	3235	19.98	13680			
6775	9462	2374	9.91	16566	2573	12.48	16532	2762	15.10	16652	2947	17.88	16803	3128	20.82	16977	3304	23.89	17113						
8200	11453	2834	16.87	20079	3002	19.96	20007	3163	23.08	20037	3318	26.24	20136												
9625	13443	3298	26.59	23584																					

HV7 (High Velocity Nozzle)

Nozzle Outlet Area: 0.716 ft²

FAN INLET CFM	NOZ-ZLE OV	1" SP			3" SP			5" SP			7" SP			9" SP			11" SP			13" SP			15" SP		
		RPM	BHP	OUT FLOW	RPM	BHP	OUT FLOW	RPM	BHP	OUT FLOW	RPM	BHP	OUT FLOW	RPM	BHP	OUT FLOW	RPM	BHP	OUT FLOW	RPM	BHP	OUT FLOW	RPM	BHP	OUT FLOW
1250	1746	897	0.33	3191																					
2350	3282	1203	0.86	5860	1591	1.88	5955	1931	3.09	6108															
3450	4818	1580	1.93	8453	1890	3.32	8641	2155	4.79	8690	2400	6.38	8759	2639	8.13	8899	2859	9.98	8977	3064	11.92	8908			
4550	6355	1985	3.80	11082	2241	5.55	11288	2469	7.41	11392	2677	9.33	11424	2871	11.30	11469	3057	13.36	11515	3242	15.57	11600			
5650	7891	2405	6.70	13733	2620	8.83	13868	2819	11.05	14046	3003	13.35	14129	3176	15.71	14158	3341	18.12	14191						
6750	9427	2833	10.90	16391	3017	13.40	16481	3192	16.01	16627	3357	18.67	16774												
7850	10964	3266	16.64	19053																					

HV5 (High Velocity Nozzle)

Nozzle Outlet Area: 0.716 ft²

FAN INLET CFM	NOZ-ZLE OV	1" SP			3" SP			5" SP			7" SP			9" SP			11" SP			13" SP			15" SP		
		RPM	BHP	OUT FLOW	RPM	BHP	OUT FLOW	RPM	BHP	OUT FLOW	RPM	BHP	OUT FLOW	RPM	BHP	OUT FLOW	RPM	BHP	OUT FLOW	RPM	BHP	OUT FLOW	RPM	BHP	OUT FLOW
775	1082	844	0.21	1875																					
1725	2409	1137	0.55	4164	1547	1.35	4212	1887	2.31	4189	2190	3.41	4301	2471	4.67	4638									
2675	3736	1521	1.28	6416	1853	2.40	6451	2128	3.61	6538	2375	4.91	6549	2603	6.30	6497	2819	7.80	6485	3025	9.39	6500	3222	11.08	6562
3625	5063	1941	2.58	8639	2218	4.06	8742	2454	5.58	8737	2668	7.17	8772	2866	8.83	8851	3053	10.56	8887	3230	12.34	8861			
4575	6390	2382	4.68	10876	2609	6.47	10973	2821	8.36	11034	3011	10.28	11035	3188	12.25	11031	3355	14.26	11066						
5525	7716	2831	7.76	13107	3023	9.87	13199	3208	12.10	13274															
6475	9043	3287	12.05	15348																					

XV (Extra High Velocity Nozzle)

Nozzle Outlet Area: 0.359 ft²

FAN INLET CFM	NOZ-ZLE OV	1" SP			3" SP			5" SP			7" SP			9" SP			11" SP			13" SP			15" SP		
		RPM	BHP	OUT FLOW	RPM	BHP	OUT FLOW	RPM	BHP	OUT FLOW	RPM	BHP	OUT FLOW	RPM	BHP	OUT FLOW	RPM	BHP	OUT FLOW	RPM	BHP	OUT FLOW	RPM	BHP	OUT FLOW
925	2577	957	0.41	2975																					
1725	4805	1259	1.06	5350	1695	2.30	5494	2041	3.77	5691															
2525	7033	1618	2.41	7811	1993	4.07	7904	2291	5.85	7977	2555	7.80	8084	2796	9.92	8218	3019	12.15	8351	3229	14.47	8459			
3325	9262	2013	4.78	10268	2324	6.83	10269	2599	9.06	10398	2836	11.35	10460	3051	13.75	10512	3254	16.30	10595						
4125	11490	2425	8.49	12694	2686	10.93	12755	2928	13.56	12755	3152	16.33	12870	3354	19.14	12944									
4925	13719	2846	13.85	15116	3070	16.70	15241	3283	19.73	15211															
5725	15947	3274	21.21	17546																					

XV7 (Extra High Velocity Nozzle)

Nozzle Outlet Area: 0.359 ft²

FAN INLET CFM	NOZ-ZLE OV	1" SP			3" SP			5" SP			7" SP			9" SP			11" SP			13" SP			15" SP		
		RPM	BHP	OUT FLOW	RPM	BHP	OUT FLOW	RPM	BHP	OUT FLOW	RPM	BHP	OUT FLOW	RPM	BHP	OUT FLOW	RPM	BHP	OUT FLOW	RPM	BHP	OUT FLOW	RPM	BHP	OUT FLOW
900	2507	959	0.34	2965																					
1625	4526	1251	0.86	5144	1681	1.85	5337	2045	3.09	5410															
2350	6546	1612	1.93	7367	1952	3.18	7460	2251	4.59	7610	2530	6.20	7766	2787	7.97	7854	3018	9.89	7784	3239	11.95	7827			
3075	8565	2006	3.78	9589	2291	5.34	9708	2538	7.00	9757	2771	8.80	9853	2994	10.73	9992	3208	12.81	10113						
3800	10585	2416	6.66	11814	2652	8.52	11933	2876	10.49	12011	3076	12.55	12049	3266	14.70	12097									
4525	12604	2835	10.81	14045	3034	12.96	14151	3230	15.23	14234															
5250	14624	3259	16.46	16277																					

XV5 (Extra High Velocity Nozzle)

Nozzle Outlet Area: 0.359 ft²

FAN INLET CFM	NOZ-ZLE OV	1" SP			3" SP			5" SP			7" SP			9" SP			11" SP			13" SP			15" SP		
		RPM	BHP	OUT FLOW	RPM	BHP	OUT FLOW	RPM	BHP	OUT FLOW	RPM	BHP	OUT FLOW	RPM	BHP	OUT FLOW	RPM	BHP	OUT FLOW	RPM	BHP	OUT FLOW	RPM	BHP	OUT FLOW
575	1602	878	0.21	1835																					
1250	3482	1157	0.56	3843	1592	1.32	3928	1955	2.27	3990	2272	3.36	4104	2552	4.57	4227									
1925	5362	1542	1.38	5883	1877	2.38	5897	2170	3.49	5981	2437	4.74	6046	2683	6.12	6080	2915	7.61	6124	3135	9.21	6186	3341	10.88	6245
2600	7242	1965	2.89	7912	2245	4.19	8001	2482	5.52	7971	2704	6.96	7986	2919	8.50	8078	3121	10.14	8136	3313	11.89	8167			
3275	9123	2408	5.33	9951	2635	6.89	10012	2853	8.57	10085	3043	10.25	10063	3221	11.98	10029									
3950	11003	2861	8.94	11995	3050	10.77	12034	3238	12.74	12101															
4625	12883	3320	13.97	14041																					

Class II = Light Blue section

Class III = Dark Blue section

Underlined figures indicate maximum static efficiency.

NOTES:

1. Performance certified is for installation Type A: Free inlet, free outlet.
2. Power rating (BHP) does not include transmission losses.
3. Performance ratings do not include the effects of appurtenances (accessories).
4. Performance ratings do not include the effects of crosswinds.

222 BAIFE

Impeller Type: Airfoil **Max Class I RPM = 1881** **Max Class III RPM = 3036** **Windband Outlet Area: 5.94 ft²**
Impeller Dia.: 22.25" **Max Class II RPM = 2381** **Tip Speed FPM = 5.84 x RPM**

LV (Low Velocity Nozzle)

Nozzle Outlet Area: 1.78 ft²

FAN INLET CFM	NOZ-ZLE OV	1" SP			3" SP			5" SP			7" SP			9" SP			11" SP			13" SP			15" SP		
		RPM	BHP	OUT FLOW	RPM	BHP	OUT FLOW	RPM	BHP	OUT FLOW	RPM	BHP	OUT FLOW	RPM	BHP	OUT FLOW	RPM	BHP	OUT FLOW	RPM	BHP	OUT FLOW	RPM	BHP	OUT FLOW
2200	1239	759	0.50	3871																					
4400	2477	1026	1.36	7453	1365	3.05	7659	1662	5.02	7790	1934	7.33	7850												
6600	3716	1388	3.23	11184	1631	5.47	11268	1863	7.99	11404	2074	10.64	11507	2277	13.51	11612	2470	16.57	11694	2656	19.87	11750	2835	23.37	11746
8800	4955	1776	6.59	15054	1962	9.38	14812	2144	12.44	15001	2325	15.74	15115	2493	19.13	15210	2652	22.60	15294	2809	26.26	15371	2961	30.05	15438
11000	6194	2175	11.89	18867	2329	15.34	18598	2476	18.92	18542	2621	22.70	18709	2767	26.71	18811	2910	30.86	18888						
13200	7432	2581	19.64	22674	2713	23.79	22502	2836	27.91	22244	2959	32.24	22239												
15400	8671	2990	30.31	26469																					

LV7 (Low Velocity Nozzle)

Nozzle Outlet Area: 1.78 ft²

FAN INLET CFM	NOZ-ZLE OV	1" SP			3" SP			5" SP			7" SP			9" SP			11" SP			13" SP			15" SP		
		RPM	BHP	OUT FLOW	RPM	BHP	OUT FLOW	RPM	BHP	OUT FLOW	RPM	BHP	OUT FLOW	RPM	BHP	OUT FLOW	RPM	BHP	OUT FLOW	RPM	BHP	OUT FLOW	RPM	BHP	OUT FLOW
1800	1014	785	0.40	3057																					
3475	1957	1068	0.99	5791	1409	2.34	5929	1690	3.90	5843	1956	5.65	5900												
5150	2900	1412	2.15	8417	1686	3.98	8671	1919	5.95	8781	2130	8.07	8783	2323	10.32	8713	2506	12.71	8655	2689	15.28	8742	2866	17.87	8732
6825	3843	1785	4.13	11099	2009	6.47	11292	2209	8.93	11469	2391	11.49	11593	2562	14.16	11647	2723	16.92	11651	2876	19.80	11630	3021	22.77	11567
8500	4786	2173	7.24	13810	2355	10.04	13910	2532	13.03	14097	2694	16.09	14243	2844	19.21	14356	2988	22.43	14444						
10175	5729	2567	11.72	16519	2721	15.00	16581	2872	18.46	16702	3019	22.05	16861												
11850	6672	2966	17.86	19235																					

LV5 (Low Velocity Nozzle)

Nozzle Outlet Area: 1.78 ft²

FAN INLET CFM	NOZ-ZLE OV	1" SP			3" SP			5" SP			7" SP			9" SP			11" SP			13" SP			15" SP		
		RPM	BHP	OUT FLOW	RPM	BHP	OUT FLOW	RPM	BHP	OUT FLOW	RPM	BHP	OUT FLOW	RPM	BHP	OUT FLOW	RPM	BHP	OUT FLOW	RPM	BHP	OUT FLOW	RPM	BHP	OUT FLOW
1275	718	781	0.30	2128																					
2600	1464	1053	0.71	4381	1419	1.83	4326	1707	3.07	4290	1954	4.44	4079												
3925	2210	1399	1.52	6542	1686	3.02	6574	1936	4.67	6524	2159	6.43	6531	2358	8.26	6542	2542	10.18	6492	2713	12.18	6373	2875	14.27	6226
5250	2956	1775	2.94	8722	2011	4.80	8834	2219	6.84	8809	2411	8.99	8744	2595	11.24	8731	2766	13.57	8728	2925	15.95	8741			
6575	3702	2165	5.16	10916	2363	7.40	10976	2544	9.79	11071	2712	12.33	11062	2869	14.97	10990	3022	17.71	10959						
7900	4448	2562	8.37	13109	2732	11.00	13139	2891	13.77	13217															
9225	5194	2965	12.80	15311																					

MV (Medium Velocity Nozzle)

Nozzle Outlet Area: 1.33 ft²

FAN INLET CFM	NOZ-ZLE OV	1" SP			3" SP			5" SP			7" SP			9" SP			11" SP			13" SP			15" SP		
		RPM	BHP	OUT FLOW	RPM	BHP	OUT FLOW	RPM	BHP	OUT FLOW	RPM	BHP	OUT FLOW	RPM	BHP	OUT FLOW	RPM	BHP	OUT FLOW	RPM	BHP	OUT FLOW	RPM	BHP	OUT FLOW
1600	1201	745	0.41	3354																					
3700	2778	976	1.18	7485	1345	2.74	7602	1669	4.67	7652	1953	6.93	7829	2199	9.39	7630									
5800	4354	1336	3.01	11576	1597	5.12	11699	1838	7.46	11758	2067	10.05	11908	2283	12.85	11867	2488	15.90	11891	2686	19.22	12085	2872	22.71	12262
7900	5931	1730	6.44	15739	1934	9.20	15880	2124	12.10	15964	2304	15.16	15895	2480	18.41	16001	2651	21.83	16154	2817	25.45	16232	2977	29.17	16199
10000	7508	2140	12.06	19940	2305	15.46	19953	2464	19.02	20129	2615	22.67	20226	2760	26.43	20178	2901	30.31	20117						
12100	9084	2557	20.45	24142	2695	24.49	24112	2830	28.70	24182	2960	32.97	24322												
14200	10661	2978	32.16	28342																					

MV7 (Medium Velocity Nozzle)

Nozzle Outlet Area: 1.33 ft²

FAN INLET CFM	NOZ-ZLE OV	1" SP			3" SP			5" SP			7" SP			9" SP			11" SP			13" SP			15" SP		
		RPM	BHP	OUT FLOW	RPM	BHP	OUT FLOW	RPM	BHP	OUT FLOW	RPM	BHP	OUT FLOW	RPM	BHP	OUT FLOW	RPM	BHP	OUT FLOW	RPM	BHP	OUT FLOW	RPM	BHP	OUT FLOW
1700	1276	787	0.39	3444																					
3300	2477	1072	1.02	6691	1411	2.33	6649	1701	3.83	6738	1958	5.55	6559												
4900	3679	1420	2.25	9765	1693	4.06	9954	1925	5.99	9923	2136	8.05	9889	2337	10.23	9964	2524	12.53	10012	2698	14.98	9918	2871	17.59	9794
6500	4880	1797	4.40	12912	2020	6.71	13099	2220	9.15	13207	2401	11.64	13194	2570	14.25	13157	2730	16.95	13113	2886	19.75	13125			
8100	6081	2186	7.75	16068	2372	10.54	16168	2546	13.50	16352	2708	16.54	16450	2858	19.59	16454	3001	22.73	16439						
9700	7282	2583	12.62	19238	2741	15.88	19288	2893	19.33	19418															
11300	8483	2984	19.29	22409																					

MV5 (Medium Velocity Nozzle)

Nozzle Outlet Area: 1.33 ft²

FAN INLET CFM	NOZ-ZLE OV	1" SP			3" SP			5" SP			7" SP			9" SP			11" SP			13" SP			15" SP		
		RPM	BHP	OUT FLOW	RPM	BHP	OUT FLOW	RPM	BHP	OUT FLOW	RPM	BHP	OUT FLOW	RPM	BHP	OUT FLOW	RPM	BHP	OUT FLOW	RPM	BHP	OUT FLOW	RPM	BHP	OUT FLOW
1175	882	772	0.28	2178																					
2450	1839	1047	0.72	4726	1416	1.79	4703	1701	3.00	4582	1963	4.39	4834												
3725	2797	1394	1.56	7038	1686	3.04	7263	1941	4.66	7291	2159	6.35	7138	2351	8.11	6947	2536	10.00	6943	2714	12.00	7061	2886	14.12	7235
5000	3754	1773	3.06	9414	2011	4.93	9550	2223	6.94	9721	2418	9.06	9811	2604	11.26	9780	2774	13.52	9701	2927	15.80	9551			
6275	4711	2166	5.43	11805	2364	7.67	11866	2548	10.07	12002	2718	12.58	12135	2878	15.19	12256	3033	17.87	12315						
7550	5668	2568	8.88	14207	2736	11.51	14225	2896	14.29	14312															
8825	6625	2974	13.63	16607																					

Class II = Light Blue section Class III = Dark Blue section Underlined figures indicate maximum static efficiency.

NOTES:
1. Performance certified is for installation Type A: Free inlet, free outlet.
2. Power rating (BHP) does not include transmission losses.
3. Performance ratings do not include the effects of appurtenances (accessories).
4. Performance ratings do not include the effects of crosswinds.

HV (High Velocity Nozzle)

Nozzle Outlet Area: 0.886 ft²

FAN INLET CFM	NOZ-ZLE OV	1" SP			3" SP			5" SP			7" SP			9" SP			11" SP			13" SP			15" SP		
		RPM	BHP	OUT FLOW	RPM	BHP	OUT FLOW	RPM	BHP	OUT FLOW	RPM	BHP	OUT FLOW	RPM	BHP	OUT FLOW	RPM	BHP	OUT FLOW	RPM	BHP	OUT FLOW	RPM	BHP	OUT FLOW
1325	1495	765	0.39	3429																					
3100	3499	989	1.15	7702	1388	2.66	7919	1720	4.56	8050	1999	6.71	8019	2238	9.03	7783	2453	11.50	7552						
4875	5502	1343	3.02	11899	1629	5.02	12212	1894	7.29	12398	2136	9.81	12477	2358	12.55	12498	2568	15.56	12578	2765	18.76	12642	2949	22.13	12704
6650	7506	1735	6.58	16230	1954	9.14	16332	2163	11.90	16582	2364	14.88	16816	2556	18.03	16917	2738	21.36	16972	2911	24.85	17006			
8425	9509	2143	12.43	20598	2322	15.63	20563	2491	18.89	20709	2656	22.33	20888	2819	26.00	21116	2976	29.79	21278						
10200	11512	2559	21.17	24971	2709	25.00	24876	2854	28.91	24921	2993	32.85	25045												
11975	13516	2980	33.43	29350																					

HV7 (High Velocity Nozzle)

Nozzle Outlet Area: 0.886 ft²

FAN INLET CFM	NOZ-ZLE OV	1" SP			3" SP			5" SP			7" SP			9" SP			11" SP			13" SP			15" SP		
		RPM	BHP	OUT FLOW	RPM	BHP	OUT FLOW	RPM	BHP	OUT FLOW	RPM	BHP	OUT FLOW	RPM	BHP	OUT FLOW	RPM	BHP	OUT FLOW	RPM	BHP	OUT FLOW	RPM	BHP	OUT FLOW
1550	1749	807	0.41	3961																					
2925	3301	1085	1.07	7290	1432	2.34	7397	1738	3.84	7609	2003	5.53	7390												
4300	4853	1428	2.43	10532	1705	4.15	10764	1943	5.99	10830	2162	7.96	10913	2376	10.14	11086	2573	12.43	11180	2757	14.84	11122	2933	17.40	10858
5675	6405	1796	4.79	13817	2025	6.98	14072	2229	9.29	14206	2416	11.70	14255	2589	14.14	14301	2755	16.70	14354	2920	19.43	14451			
7050	7957	2178	8.48	17134	2370	11.14	17298	2548	13.91	17522	2713	16.77	17635	2867	19.70	17663	3015	22.71	17706						
8425	9509	2567	13.81	20458	2731	16.94	20566	2887	20.18	20741	3035	23.51	20930												
9800	11061	2960	21.10	23784																					

HV5 (High Velocity Nozzle)

Nozzle Outlet Area: 0.886 ft²

FAN INLET CFM	NOZ-ZLE OV	1" SP			3" SP			5" SP			7" SP			9" SP			11" SP			13" SP			15" SP		
		RPM	BHP	OUT FLOW	RPM	BHP	OUT FLOW	RPM	BHP	OUT FLOW	RPM	BHP	OUT FLOW	RPM	BHP	OUT FLOW	RPM	BHP	OUT FLOW	RPM	BHP	OUT FLOW	RPM	BHP	OUT FLOW
950	1072	758	0.25	2307																					
2125	2398	1019	0.68	5127	1389	1.67	5191	1695	2.85	5161	1968	4.21	5310	2221	5.76	5737									
3300	3725	1363	1.57	7909	1662	2.96	7952	1910	4.45	8062	2132	6.05	8066	2338	7.78	8013	2533	9.63	8008	2718	11.60	8021	2895	13.68	8095
4475	5051	1741	3.17	10666	1990	5.00	10790	2203	6.88	10788	2396	8.85	10836	2573	10.88	10922	2742	13.03	10971	2902	15.25	10948			
5650	6377	2137	5.76	13432	2341	7.96	13549	2533	10.32	13634	2704	12.69	13636	2862	15.10	13620	3013	17.61	13671						
6825	7703	2541	9.56	16197	2713	12.16	16305	2879	14.91	16392															
8000	9029	2950	14.84	18964																					

XV (Extra High Velocity Nozzle)

Nozzle Outlet Area: 0.444 ft²

FAN INLET CFM	NOZ-ZLE OV	1" SP			3" SP			5" SP			7" SP			9" SP			11" SP			13" SP			15" SP		
		RPM	BHP	OUT FLOW	RPM	BHP	OUT FLOW	RPM	BHP	OUT FLOW	RPM	BHP	OUT FLOW	RPM	BHP	OUT FLOW	RPM	BHP	OUT FLOW	RPM	BHP	OUT FLOW	RPM	BHP	OUT FLOW
1150	2590	861	0.51	3691																					
2150	4842	1136	1.33	6663	1528	2.88	6853	1837	4.69	7079	2106	6.69	7271												
3150	7095	1463	3.04	9743	1799	5.11	9859	2066	7.32	9948	2302	9.74	10071	2518	12.37	10233	2718	15.15	10400	2906	18.02	10529			
4150	9347	1822	6.05	12810	2100	8.61	12814	2346	11.38	12970	2559	14.24	13052	2751	17.21	13108	2933	20.39	13210						
5150	11599	2196	10.75	15839	2430	13.81	15929	2646	17.08	15921	2846	20.52	16056	3028	24.05	16158									
6150	13851	2580	17.60	18878	2779	21.13	19028	2969	24.90	18995															
7150	16104	2968	26.94	21910																					

XV7 (Extra High Velocity Nozzle)

Nozzle Outlet Area: 0.444 ft²

FAN INLET CFM	NOZ-ZLE OV	1" SP			3" SP			5" SP			7" SP			9" SP			11" SP			13" SP			15" SP		
		RPM	BHP	OUT FLOW	RPM	BHP	OUT FLOW	RPM	BHP	OUT FLOW	RPM	BHP	OUT FLOW	RPM	BHP	OUT FLOW	RPM	BHP	OUT FLOW	RPM	BHP	OUT FLOW	RPM	BHP	OUT FLOW
1125	2534	865	0.43	3712																					
2025	4561	1129	1.08	6407	1514	2.31	6646	1841	3.85	6755															
2925	6588	1455	2.42	9167	1760	3.97	9284	2028	5.73	9471	2277	7.71	9654	2508	9.92	9767	2716	12.30	9703	2914	14.85	9742			
3825	8615	1811	4.74	11929	2066	6.67	12075	2288	8.75	12139	2496	10.98	12248	2696	13.37	12423	2887	15.93	12563						
4725	10642	2181	8.35	14692	2392	10.65	14838	2593	13.11	14936	2772	15.66	14979	2942	18.33	15032									
5625	12669	2559	13.55	17461	2737	16.21	17593	2913	19.05	17701															
6525	14696	2941	20.62	20230																					

XV5 (Extra High Velocity Nozzle)

Nozzle Outlet Area: 0.444 ft²

FAN INLET CFM	NOZ-ZLE OV	1" SP			3" SP			5" SP			7" SP			9" SP			11" SP			13" SP			15" SP		
		RPM	BHP	OUT FLOW	RPM	BHP	OUT FLOW	RPM	BHP	OUT FLOW	RPM	BHP	OUT FLOW	RPM	BHP	OUT FLOW	RPM	BHP	OUT FLOW	RPM	BHP	OUT FLOW	RPM	BHP	OUT FLOW
700	1577	787	0.25	2229																					
1525	3435	1031	0.68	4684	1426	1.61	4798	1754	2.78	4874	2039	4.12	5005	2292	5.62	5179									
2350	5293	1372	1.66	7186	1675	2.87	7195	1942	4.24	7317	2183	5.79	7388	2405	7.49	7425	2615	9.32	7483	2813	11.28	7554	2999	13.35	7641
3175	7151	1746	3.45	9663	2001	5.05	9776	2215	6.68	9731	2417	8.44	9762	2611	10.33	9871	2794	12.36	9941	2968	14.52	9981			
4000	9009	2139	6.36	12158	2346	8.28	12237	2543	10.33	12320	2715	12.38	12289	2876	14.50	12246	3036	16.75	12292						
4825	10867	2541	10.67	14657	2713	12.92	14708	2884	15.32	14791															
5650	12725	2947	16.65	17151																					

Class II = Light Blue section

Class III = Dark Blue section

Underlined figures indicate maximum static efficiency.

NOTES:

1. Performance certified is for installation Type A: Free inlet, free outlet.
2. Power rating (BHP) does not include transmission losses.
3. Performance ratings do not include the effects of appurtenances (accessories).
4. Performance ratings do not include the effects of crosswinds.

245 BAIFE

Impeller Type: Airfoil **Max Class I RPM = 1708** **Max Class III RPM = 2757** **Windband Outlet Area: 7.20 ft²**
Impeller Dia.: 24.50" **Max Class II RPM = 2162** **Tip Speed FPM = 6.41 x RPM**

LV (Low Velocity Nozzle)

Nozzle Outlet Area: 2.15 ft²

FAN INLET CFM	NOZ-ZLE OV	1" SP			3" SP			5" SP			7" SP			9" SP			11" SP			13" SP			15" SP		
		RPM	BHP	OUT FLOW	RPM	BHP	OUT FLOW	RPM	BHP	OUT FLOW	RPM	BHP	OUT FLOW	RPM	BHP	OUT FLOW	RPM	BHP	OUT FLOW	RPM	BHP	OUT FLOW	RPM	BHP	OUT FLOW
2675	1242	690	0.61	4713																					
5325	2472	931	1.64	9026	1239	3.69	9271	1509	6.08	9431	1756	8.88	9482												
7975	3702	1257	3.89	13512	1478	6.59	13612	1689	9.63	13773	1882	12.86	13914	2066	16.31	14024	2242	20.03	14135	2411	24.02	14188	2574	28.27	14190
10625	4933	1607	7.90	18177	1777	11.29	17894	1942	14.96	18111	2107	18.96	18248	2260	23.05	18366	2405	27.25	18469	2548	31.69	18562	2687	36.30	18660
13275	6163	1967	14.24	22772	2107	18.39	22438	2241	22.71	22379	2373	27.27	22578	2507	32.15	22712	2637	37.16	22799						
15925	7393	2333	23.49	27356	2453	28.48	27139	2566	33.48	26838	2677	38.66	26825												
18575	8623	2701	36.17	31916																					

LV7 (Low Velocity Nozzle)

Nozzle Outlet Area: 2.15 ft²

FAN INLET CFM	NOZ-ZLE OV	1" SP			3" SP			5" SP			7" SP			9" SP			11" SP			13" SP			15" SP		
		RPM	BHP	OUT FLOW	RPM	BHP	OUT FLOW	RPM	BHP	OUT FLOW	RPM	BHP	OUT FLOW	RPM	BHP	OUT FLOW	RPM	BHP	OUT FLOW	RPM	BHP	OUT FLOW	RPM	BHP	OUT FLOW
2175	1010	712	0.48	3689																					
4200	1950	968	1.20	7001	1278	2.83	7163	1533	4.71	7044	1776	6.83	7137												
6225	2890	1279	2.58	10172	1529	4.81	10489	1741	7.19	10622	1932	9.74	10610	2107	12.45	10511	2274	15.36	10452	2441	18.48	10567	2602	21.62	10551
8250	3830	1617	4.98	13419	1821	7.81	13656	2003	10.78	13872	2168	13.87	14014	2323	17.08	14069	2470	20.44	14080	2609	23.92	14052	2741	27.52	13976
10275	4770	1968	8.71	16694	2134	12.10	16818	2295	15.72	17046	2442	19.41	17219	2579	23.19	17363	2710	27.09	17468						
12300	5710	2325	14.10	19971	2465	18.06	20045	2602	22.23	20188	2736	26.58	20384												
14325	6650	2686	21.47	23253																					

LV5 (Low Velocity Nozzle)

Nozzle Outlet Area: 2.15 ft²

FAN INLET CFM	NOZ-ZLE OV	1" SP			3" SP			5" SP			7" SP			9" SP			11" SP			13" SP			15" SP		
		RPM	BHP	OUT FLOW	RPM	BHP	OUT FLOW	RPM	BHP	OUT FLOW	RPM	BHP	OUT FLOW	RPM	BHP	OUT FLOW	RPM	BHP	OUT FLOW	RPM	BHP	OUT FLOW	RPM	BHP	OUT FLOW
1550	720	710	0.36	2591																					
3150	1462	956	0.87	5310	1288	2.21	5238	1550	3.72	5197	1774	5.38	4931												
4750	2205	1269	1.84	7920	1530	3.65	7959	1757	5.65	7896	1959	7.77	7898	2141	10.00	7926	2308	12.33	7862	2463	14.75	7710	2610	17.27	7526
6350	2948	1609	3.55	10551	1823	5.79	10684	2012	8.25	10649	2188	10.88	10585	2355	13.60	10567	2510	16.41	10559	2654	19.29	10570			
7950	3691	1961	6.21	13195	2141	8.91	13268	2307	11.82	13396	2459	14.88	13376	2602	18.08	13288	2741	21.39	13249						
9550	4434	2321	10.08	15852	2475	13.24	15882	2620	16.60	15981	2756	20.09	16077												
11150	5176	2684	15.37	18500																					

MV (Medium Velocity Nozzle)

Nozzle Outlet Area: 1.62 ft²

FAN INLET CFM	NOZ-ZLE OV	1" SP			3" SP			5" SP			7" SP			9" SP			11" SP			13" SP			15" SP		
		RPM	BHP	OUT FLOW	RPM	BHP	OUT FLOW	RPM	BHP	OUT FLOW	RPM	BHP	OUT FLOW	RPM	BHP	OUT FLOW	RPM	BHP	OUT FLOW	RPM	BHP	OUT FLOW	RPM	BHP	OUT FLOW
1950	1207	676	0.50	4027																					
4500	2786	888	1.44	9104	1222	3.33	9235	1516	5.68	9296	1774	8.41	9524	1998	11.42	9374									
7050	4365	1215	3.67	14060	1453	6.25	14235	1671	9.09	14296	1878	12.22	14465	2074	15.62	14417	2260	19.31	14445	2439	23.32	14632	2608	27.56	14848
9600	5944	1575	7.87	19136	1759	11.20	19294	1932	14.75	19411	2095	18.46	19324	2254	22.39	19438	2409	26.54	19624	2559	30.90	19703	2705	35.46	19695
12150	7523	1947	14.71	24223	2097	18.85	24246	2241	23.16	24456	2378	27.60	24577	2509	32.14	24512	2637	36.86	24439						
14700	9102	2327	24.94	29334	2452	29.86	29298	2574	34.95	29376	2692	40.14	29548												
17250	10681	2710	39.23	34435																					

MV7 (Medium Velocity Nozzle)

Nozzle Outlet Area: 1.62 ft²

FAN INLET CFM	NOZ-ZLE OV	1" SP			3" SP			5" SP			7" SP			9" SP			11" SP			13" SP			15" SP		
		RPM	BHP	OUT FLOW	RPM	BHP	OUT FLOW	RPM	BHP	OUT FLOW	RPM	BHP	OUT FLOW	RPM	BHP	OUT FLOW	RPM	BHP	OUT FLOW	RPM	BHP	OUT FLOW	RPM	BHP	OUT FLOW
2050	1269	714	0.48	4162																					
3975	2461	969	1.22	8054	1279	2.81	8018	1543	4.62	8126	1777	6.69	7884												
5900	3653	1283	2.69	11766	1532	4.88	11992	1743	7.20	11947	1935	9.68	11901	2118	12.30	11991	2288	15.08	12037	2447	18.05	11913	2605	21.20	11750
7825	4845	1621	5.23	15536	1826	8.03	15780	2008	10.96	15901	2173	13.97	15884	2327	17.11	15839	2473	20.37	15788	2615	23.75	15802	2753	27.22	15869
9750	6037	1972	9.22	19341	2142	12.58	19465	2301	16.15	19689	2448	19.79	19793	2585	23.47	19798	2716	27.28	19790						
11675	7229	2329	14.99	23149	2474	18.92	23217	2613	23.08	23379	2745	27.38	23570												
13600	8421	2691	22.91	26972																					

MV5 (Medium Velocity Nozzle)

Nozzle Outlet Area: 1.62 ft²

FAN INLET CFM	NOZ-ZLE OV	1" SP			3" SP			5" SP			7" SP			9" SP			11" SP			13" SP			15" SP		
		RPM	BHP	OUT FLOW	RPM	BHP	OUT FLOW	RPM	BHP	OUT FLOW	RPM	BHP	OUT FLOW	RPM	BHP	OUT FLOW	RPM	BHP	OUT FLOW	RPM	BHP	OUT FLOW	RPM	BHP	OUT FLOW
1425	882	702	0.35	2655																					
2975	1842	952	0.87	5741	1286	2.17	5702	1545	3.64	5559	1783	5.33	5865												
4525	2802	1268	1.91	8550	1533	3.70	8824	1764	5.66	8857	1962	7.71	8674	2136	9.85	8438	2304	12.15	8432	2466	14.58	8580	2622	17.15	8789
6075	3762	1613	3.73	11437	1829	6.00	11603	2021	8.44	11807	2198	11.01	11920	2367	13.69	11888	2521	16.43	11787	2660	19.20	11609			
7625	4721	1971	6.62	14344	2151	9.35	14423	2318	12.27	14588	2472	15.31	14747	2617	18.48	14894	2757	21.73	14962						
9175	5681	2337	10.83	17264	2490	14.04	17292	2635	17.41	17396															
10725	6641	2707	16.63	20184																					

Class II = Light Blue section Class III = Dark Blue section Underlined figures indicate maximum static efficiency.

NOTES:
1. Performance certified is for installation Type A: Free inlet, free outlet.
2. Power rating (BHP) does not include transmission losses.
3. Performance ratings do not include the effects of appurtenances (accessories).
4. Performance ratings do not include the effects of crosswinds.

HV (High Velocity Nozzle)

Nozzle Outlet Area: 1.07 ft²

FAN INLET CFM	NOZ-ZLE OV	1" SP			3" SP			5" SP			7" SP			9" SP			11" SP			13" SP			15" SP		
		RPM	BHP	OUT FLOW	RPM	BHP	OUT FLOW	RPM	BHP	OUT FLOW	RPM	BHP	OUT FLOW	RPM	BHP	OUT FLOW	RPM	BHP	OUT FLOW	RPM	BHP	OUT FLOW	RPM	BHP	OUT FLOW
1600	1490	695	0.48	4172																					
3750	3492	897	1.38	9318	1260	3.22	9584	1561	5.52	9705	1815	8.13	9699	2032	10.93	9410	2227	13.92	9111						
5900	5493	1218	3.65	14403	1478	6.07	14780	1719	8.82	15006	1939	11.88	15101	2140	15.18	15097	2331	18.82	15193	2511	22.73	15323	2677	26.78	15339
8050	7495	1574	7.96	19655	1772	11.03	19763	1962	14.37	20063	2145	17.99	20348	2320	21.81	20480	2485	25.83	20536	2643	30.09	20598			
10200	9497	1944	15.02	24944	2106	18.87	24893	2260	22.83	25074	2410	27.00	25290	2558	31.43	25563	2701	36.03	25763						
12350	11499	2321	25.57	30235	2458	30.23	30131	2589	34.93	30174	2715	39.68	30319												
14500	13501	2703	40.38	35539																					

HV7 (High Velocity Nozzle)

Nozzle Outlet Area: 1.07 ft²

FAN INLET CFM	NOZ-ZLE OV	1" SP			3" SP			5" SP			7" SP			9" SP			11" SP			13" SP			15" SP		
		RPM	BHP	OUT FLOW	RPM	BHP	OUT FLOW	RPM	BHP	OUT FLOW	RPM	BHP	OUT FLOW	RPM	BHP	OUT FLOW	RPM	BHP	OUT FLOW	RPM	BHP	OUT FLOW	RPM	BHP	OUT FLOW
1900	1769	735	0.50	4849																					
3575	3329	991	1.32	8916	1304	2.86	9038	1581	4.70	9299	1821	6.75	9072												
5250	4888	1304	3.00	12857	1555	5.10	13147	1770	7.34	13222	1968	9.74	13327	2161	12.38	13522	2340	15.17	13651	2506	18.09	13574	2666	21.21	13300
6925	6448	1640	5.90	16859	1847	8.57	17164	2032	11.40	17336	2200	14.31	17376	2357	17.29	17438	2508	20.42	17518	2657	23.74	17635			
8600	8007	1989	10.45	20902	2162	13.69	21093	2323	17.06	21362	2472	20.54	21497	2612	24.12	21541	2746	27.80	21592						
10275	9567	2344	17.02	24951	2492	20.83	25079	2633	24.78	25288															
11950	11127	2702	25.98	28993																					

HV5 (High Velocity Nozzle)

Nozzle Outlet Area: 1.07 ft²

FAN INLET CFM	NOZ-ZLE OV	1" SP			3" SP			5" SP			7" SP			9" SP			11" SP			13" SP			15" SP		
		RPM	BHP	OUT FLOW	RPM	BHP	OUT FLOW	RPM	BHP	OUT FLOW	RPM	BHP	OUT FLOW	RPM	BHP	OUT FLOW	RPM	BHP	OUT FLOW	RPM	BHP	OUT FLOW	RPM	BHP	OUT FLOW
1175	1094	690	0.31	2839																					
2600	2421	930	0.84	6271	1265	2.04	6358	1541	3.47	6300	1788	5.13	6461	2017	7.01	6954									
4025	3748	1244	1.93	9651	1514	3.62	9698	1739	5.44	9834	1940	7.39	9846	2126	9.48	9772	2302	11.73	9749	2470	14.12	9769	2631	16.66	9869
5450	5074	1587	3.89	12987	1813	6.11	13146	2006	8.41	13144	2180	10.79	13188	2341	13.27	13299	2494	15.88	13361	2639	18.58	13335			
6875	6401	1947	7.05	16343	2132	9.73	16487	2305	12.58	16583	2460	15.46	16584	2604	18.41	16573	2741	21.46	16633						
8300	7728	2314	11.69	19695	2470	14.85	19827	2621	18.20	19941															
9725	9055	2685	18.11	23046																					

XV (Extra High Velocity Nozzle)

Nozzle Outlet Area: 0.539 ft²

FAN INLET CFM	NOZ-ZLE OV	1" SP			3" SP			5" SP			7" SP			9" SP			11" SP			13" SP			15" SP		
		RPM	BHP	OUT FLOW	RPM	BHP	OUT FLOW	RPM	BHP	OUT FLOW	RPM	BHP	OUT FLOW	RPM	BHP	OUT FLOW	RPM	BHP	OUT FLOW	RPM	BHP	OUT FLOW	RPM	BHP	OUT FLOW
1400	2597	783	0.62	4494																					
2600	4824	1030	1.61	8057	1386	3.47	8283	1668	5.68	8577	1912	8.09	8801												
3800	7050	1324	3.64	11758	1629	6.13	11888	1872	8.80	11997	2088	11.75	12168	2284	14.92	12359	2466	18.28	12562	2637	21.76	12718			
5000	9276	1646	7.21	15437	1900	10.30	15445	2124	13.65	15635	2317	17.08	15723	2493	20.70	15811	2658	24.53	15926						
6200	11503	1982	12.79	19074	2195	16.46	19167	2392	20.40	19162	2575	24.57	19338	2740	28.80	19451									
7400	13729	2326	20.87	22711	2508	25.13	22890	2682	29.68	22849															
8600	15955	2675	31.92	26354																					

XV7 (Extra High Velocity Nozzle)

Nozzle Outlet Area: 0.539 ft²

FAN INLET CFM	NOZ-ZLE OV	1" SP			3" SP			5" SP			7" SP			9" SP			11" SP			13" SP			15" SP		
		RPM	BHP	OUT FLOW	RPM	BHP	OUT FLOW	RPM	BHP	OUT FLOW	RPM	BHP	OUT FLOW	RPM	BHP	OUT FLOW	RPM	BHP	OUT FLOW	RPM	BHP	OUT FLOW	RPM	BHP	OUT FLOW
1350	2505	783	0.51	4452																					
2450	4545	1024	1.30	7753	1374	2.79	8041	1671	4.66	8164															
3550	6586	1323	2.94	11132	1599	4.82	11265	1842	6.95	11487	2069	9.37	11727	2278	12.03	11851	2467	14.93	11778	2646	18.00	11800			
4650	8627	1648	5.79	14497	1880	8.14	14684	2081	10.66	14758	2269	13.36	14881	2451	16.27	15102	2624	19.38	15271						
5750	10668	1987	10.22	17876	2178	13.02	18052	2360	16.01	18170	2523	19.12	18232	2677	22.37	18295									
6850	12709	2333	16.62	21260	2494	19.87	21417	2653	23.31	21546															
7950	14750	2683	25.34	24645																					

XV5 (Extra High Velocity Nozzle)

Nozzle Outlet Area: 0.539 ft²

FAN INLET CFM	NOZ-ZLE OV	1" SP			3" SP			5" SP			7" SP			9" SP			11" SP			13" SP			15" SP		
		RPM	BHP	OUT FLOW	RPM	BHP	OUT FLOW	RPM	BHP	OUT FLOW	RPM	BHP	OUT FLOW	RPM	BHP	OUT FLOW	RPM	BHP	OUT FLOW	RPM	BHP	OUT FLOW	RPM	BHP	OUT FLOW
850	1577	715	0.31	2710																					
1850	3432	937	0.82	5686	1295	1.95	5817	1593	3.37	5913	1852	5.00	6078	2082	6.82	6298									
2850	5288	1246	2.01	8712	1522	3.49	8732	1763	5.14	8864	1982	7.01	8951	2184	9.08	9002	2375	11.31	9079	2555	13.69	9171	2724	16.19	9278
3850	7143	1586	4.19	11717	1817	6.12	11851	2012	8.10	11803	2195	10.23	11837	2371	12.52	11967	2538	14.99	12064	2695	17.60	12097			
4850	8998	1943	7.72	14743	2130	10.04	14831	2309	12.52	14933	2465	15.00	14893	2612	17.58	14850	2757	20.30	14902						
5850	10853	2307	12.93	17765	2464	15.67	17832	2619	18.57	17931															
6850	12709	2676	20.18	20791																					

Class II = Light Blue section

Class III = Dark Blue section

Underlined figures indicate maximum static efficiency.

NOTES:

1. Performance certified is for installation Type A: Free inlet, free outlet.
2. Power rating (BHP) does not include transmission losses.
3. Performance ratings do not include the effects of appurtenances (accessories).
4. Performance ratings do not include the effects of crosswinds.

270 BAIFE

Impeller Type: Airfoil **Max Class I RPM = 1558** **Max Class III RPM = 2549** **Windband Outlet Area: 8.73 ft²**
Impeller Dia.: 27.00" **Max Class II RPM = 1999** **Tip Speed FPM = 7.07 x RPM**

LV (Low Velocity Nozzle)

Nozzle Outlet Area: 2.62 ft²

FAN INLET CFM	NOZ-ZLE OV	1" SP			3" SP			5" SP			7" SP			9" SP			11" SP			13" SP			15" SP		
		RPM	BHP	OUT FLOW	RPM	BHP	OUT FLOW	RPM	BHP	OUT FLOW	RPM	BHP	OUT FLOW	RPM	BHP	OUT FLOW	RPM	BHP	OUT FLOW	RPM	BHP	OUT FLOW	RPM	BHP	OUT FLOW
2700	**1032**	616	0.58	4643																					
6150	**2351**	840	1.71	10304	1120	3.89	9977	1379	6.55	10475	1617	9.72	11432	1821	13.07	12003									
9600	**3670**	1131	4.15	16084	1366	7.40	16012	1548	10.66	15698	1722	14.22	15569	1892	18.07	15776	2056	22.24	16082	2219	26.88	16618	2375	31.79	17285
13050	**4989**	1457	8.63	21957	1656	13.06	21921	1818	17.40	21806	1956	21.74	21602	2089	26.24	21372	2218	30.95	21202	2345	35.88	21168	2471	41.03	21293
16500	**6307**	1800	15.95	27873	1947	21.19	27634	2110	27.00	27734	2242	32.53	27658	2355	37.92	27503	2463	43.42	27334						
19950	**7626**	2149	26.80	33767	2268	32.95	33506	2395	39.56	33409	2531	46.63	33513												
23400	**8945**	2502	41.94	39659																					

LV7 (Low Velocity Nozzle)

Nozzle Outlet Area: 2.62 ft²

FAN INLET CFM	NOZ-ZLE OV	1" SP			3" SP			5" SP			7" SP			9" SP			11" SP			13" SP			15" SP		
		RPM	BHP	OUT FLOW	RPM	BHP	OUT FLOW	RPM	BHP	OUT FLOW	RPM	BHP	OUT FLOW	RPM	BHP	OUT FLOW	RPM	BHP	OUT FLOW	RPM	BHP	OUT FLOW	RPM	BHP	OUT FLOW
1800	**688**	639	0.47	3879																					
4400	**1682**	815	1.02	7184	1115	2.71	6991	1410	5.18	7806	1713	8.70	10970	1947	12.17	12569	2138	15.54	13477						
7000	**2676**	1105	2.43	11411	1347	4.65	11421	1536	7.10	11296	1719	9.97	11137	1903	13.33	11090	2090	17.24	10735	2275	21.67	12693	2471	27.02	14882
9600	**3670**	1443	5.20	15718	1615	7.80	15624	1799	10.99	15694	1943	14.16	15602	2078	17.56	15495	2214	21.33	15405	2347	25.38	15297	2480	29.78	15204
12200	**4664**	1796	9.80	20032	1923	12.78	19885	2064	16.30	19858	2214	20.35	19929	2341	24.38	19907	2453	28.44	19843						
14800	**5657**	2155	16.72	24338	2258	20.18	24203	2365	23.97	24104	2481	28.24	24075												
17400	**6651**	2517	26.44	28635																					

LV5 (Low Velocity Nozzle)

Nozzle Outlet Area: 2.62 ft²

FAN INLET CFM	NOZ-ZLE OV	1" SP			3" SP			5" SP			7" SP			9" SP			11" SP			13" SP			15" SP		
		RPM	BHP	OUT FLOW	RPM	BHP	OUT FLOW	RPM	BHP	OUT FLOW	RPM	BHP	OUT FLOW	RPM	BHP	OUT FLOW	RPM	BHP	OUT FLOW	RPM	BHP	OUT FLOW	RPM	BHP	OUT FLOW
1275	**487**	644	0.37	2581																					
3350	**1281**	823	0.79	5428	1138	2.20	5064	1426	4.17	5146	1705	6.82	6865	1945	9.74	8120	2141	12.60	8716	2315	15.51	9075			
5425	**2074**	1104	1.80	8962	1375	3.71	8744	1576	5.79	8501	1764	8.19	8284	1946	10.94	8147	2125	14.04	8179	2299	17.49	8261	2471	21.36	9008
7500	**2867**	1436	3.78	12542	1642	6.08	12273	1841	8.81	12147	1996	11.54	11974	2139	14.44	11795	2279	17.60	11635	2414	20.99	11489	2546	24.61	11355
9575	**3660**	1785	7.08	16107	1939	9.71	15825	2106	12.85	15665	2271	16.38	15592	2405	19.80	15451	2525	23.29	15319						
11650	**4453**	2142	12.05	19663	2268	15.10	19416	2396	18.47	19211	2534	22.32	19081												
13725	**5247**	2503	19.04	23209																					

MV (Medium Velocity Nozzle)

Nozzle Outlet Area: 1.96 ft²

FAN INLET CFM	NOZ-ZLE OV	1" SP			3" SP			5" SP			7" SP			9" SP			11" SP			13" SP			15" SP		
		RPM	BHP	OUT FLOW	RPM	BHP	OUT FLOW	RPM	BHP	OUT FLOW	RPM	BHP	OUT FLOW	RPM	BHP	OUT FLOW	RPM	BHP	OUT FLOW	RPM	BHP	OUT FLOW	RPM	BHP	OUT FLOW
3525	**1796**	662	0.79	6486																					
6525	**3324**	919	2.28	12063	1172	4.47	11891	1421	7.27	12593															
9525	**4852**	1215	5.31	18188	1418	8.31	17206	1594	11.53	17220	1762	15.00	17445	1934	19.00	17894	2102	23.37	18445	2264	28.05	19023			
12525	**6381**	1521	10.35	24086	1716	14.89	23543	1851	18.49	22633	1988	22.68	22607	2120	27.02	22689	2247	31.50	22837	2375	36.34	23054	2506	41.64	23403
15525	**7909**	1841	18.22	29986	2011	24.05	29623	2150	29.24	29010	2257	33.60	28182	2367	38.52	27977	2477	43.82	28018						
18525	**9437**	2167	29.54	35866	2306	36.23	35468	2449	43.38	35239															
21525	**10965**	2497	45.00	41742																					

MV7 (Medium Velocity Nozzle)

Nozzle Outlet Area: 1.96 ft²

FAN INLET CFM	NOZ-ZLE OV	1" SP			3" SP			5" SP			7" SP			9" SP			11" SP			13" SP			15" SP		
		RPM	BHP	OUT FLOW	RPM	BHP	OUT FLOW	RPM	BHP	OUT FLOW	RPM	BHP	OUT FLOW	RPM	BHP	OUT FLOW	RPM	BHP	OUT FLOW	RPM	BHP	OUT FLOW	RPM	BHP	OUT FLOW
2975	**1516**	682	0.62	5405																					
5250	**2674**	940	1.58	9608	1190	3.28	9527	1433	5.50	10118															
7525	**3833**	1237	3.50	14407	1432	5.67	13518	1607	8.10	13545	1777	10.84	13772	1947	13.98	14200	2115	17.53	14666						
9800	**4992**	1534	6.51	18926	1721	9.65	18182	1859	12.40	17612	1996	15.52	17595	2127	18.78	17677	2257	22.30	17832	2388	26.15	18100	2519	30.33	18458
12075	**6151**	1846	11.15	23474	2020	15.35	23022	2145	18.73	22197	2257	22.11	21731	2370	25.89	21685	2480	29.79	21694						
14350	**7310**	2164	17.74	28004	2311	22.63	27565	2448	27.51	27174	2547	31.35	26413												
16625	**8469**	2486	26.66	32529																					

MV5 (Medium Velocity Nozzle)

Nozzle Outlet Area: 1.96 ft²

FAN INLET CFM	NOZ-ZLE OV	1" SP			3" SP			5" SP			7" SP			9" SP			11" SP			13" SP			15" SP		
		RPM	BHP	OUT FLOW	RPM	BHP	OUT FLOW	RPM	BHP	OUT FLOW	RPM	BHP	OUT FLOW	RPM	BHP	OUT FLOW	RPM	BHP	OUT FLOW	RPM	BHP	OUT FLOW	RPM	BHP	OUT FLOW
2250	**1146**	688	0.48	3912																					
4075	**2076**	941	1.18	7015	1210	2.62	7035	1455	4.48	7450															
5900	**3006**	1238	2.58	10660	1454	4.44	10059	1640	6.51	10103	1814	8.82	10262	1984	11.46	10555	2149	14.40	10860	2317	17.77	11210			
7725	**3935**	1530	4.72	14078	1740	7.37	13515	1893	9.77	13172	2039	12.44	13176	2175	15.20	13234	2309	18.21	13359	2441	21.47	13541			
9550	**4865**	1836	7.98	17501	2039	11.61	17195	2176	14.47	16572	2300	17.42	16290	2422	20.68	16281	2538	24.01	16296						
11375	**5795**	2150	12.62	20926	2327	16.92	20639	2479	21.04	20338															
13200	**6724**	2468	18.89	24341																					

Class II = Light Blue section Class III = Dark Blue section Underlined figures indicate maximum static efficiency.

NOTES:
1. Performance certified is for installation Type A: Free inlet, free outlet.
2. Power rating (BHP) does not include transmission losses.
3. Performance ratings do not include the effects of appurtenances (accessories).
4. Performance ratings do not include the effects of crosswinds.

HV (High Velocity Nozzle)

Nozzle Outlet Area: 1.31 ft²

FAN INLET CFM	NOZ-ZLE OV	1" SP			3" SP			5" SP			7" SP			9" SP			11" SP			13" SP			15" SP		
		RPM	BHP	OUT FLOW	RPM	BHP	OUT FLOW	RPM	BHP	OUT FLOW	RPM	BHP	OUT FLOW	RPM	BHP	OUT FLOW	RPM	BHP	OUT FLOW	RPM	BHP	OUT FLOW	RPM	BHP	OUT FLOW
2375	1813	650	0.62	5344																					
4925	3760	851	1.74	10491	1168	3.87	11348	1437	6.51	11009	1668	9.36	10963												
7475	5706	1151	4.38	16250	1366	7.08	16086	1577	10.15	16738	1782	13.72	17253	1967	17.63	16983	2138	21.69	16730	2300	25.89	16654	2451	30.22	16619
10025	7653	1474	9.24	22092	1642	12.66	21462	1800	16.30	21471	1957	20.21	21956	2116	24.51	22462	2273	29.20	22971	2419	34.13	23136			
12575	9599	1807	17.03	27917	1947	21.21	27278	2077	25.60	26873	2204	30.19	26832	2329	34.88	27141	2454	39.85	27541						
15125	11546	2147	28.57	33748	2266	33.52	33129	2379	38.65	32685	2486	43.93	32352												
17675	13492	2490	44.56	39560																					

HV7 (High Velocity Nozzle)

Nozzle Outlet Area: 1.31 ft²

FAN INLET CFM	NOZ-ZLE OV	1" SP			3" SP			5" SP			7" SP			9" SP			11" SP			13" SP			15" SP		
		RPM	BHP	OUT FLOW	RPM	BHP	OUT FLOW	RPM	BHP	OUT FLOW	RPM	BHP	OUT FLOW	RPM	BHP	OUT FLOW	RPM	BHP	OUT FLOW	RPM	BHP	OUT FLOW	RPM	BHP	OUT FLOW
2025	1546	655	0.49	4556																					
4100	3130	864	1.24	8793	1175	2.91	9419	1438	5.02	9122	1662	7.34	9054												
6175	4714	1165	2.99	13514	1377	5.00	13373	1589	7.42	13933	1789	10.25	14202	1970	13.35	13866	2138	16.59	13745	2294	19.93	13635	2441	23.46	13614
8250	6298	1488	6.14	18325	1654	8.68	17729	1813	11.44	17816	1969	14.44	18189	2129	17.83	18633	2282	21.51	18950	2426	25.47	18949			
10325	7882	1822	11.19	23142	1961	14.27	22535	2090	17.53	22169	2216	20.94	22178	2341	24.52	22462	2467	28.40	22779						
12400	9466	2162	18.62	27952	2280	22.22	27356	2392	26.00	26930	2498	29.91	26629												
14475	11050	2504	28.85	32732																					

HV5 (High Velocity Nozzle)

Nozzle Outlet Area: 1.31 ft²

FAN INLET CFM	NOZ-ZLE OV	1" SP			3" SP			5" SP			7" SP			9" SP			11" SP			13" SP			15" SP		
		RPM	BHP	OUT FLOW	RPM	BHP	OUT FLOW	RPM	BHP	OUT FLOW	RPM	BHP	OUT FLOW	RPM	BHP	OUT FLOW	RPM	BHP	OUT FLOW	RPM	BHP	OUT FLOW	RPM	BHP	OUT FLOW
1525	1164	650	0.38	3249																					
3250	2481	863	0.94	6654	1183	2.33	7144	1441	4.07	6918	1660	5.98	6845	1856	8.15	6935									
4975	3798	1162	2.22	10356	1393	3.94	10280	1608	5.97	10668	1808	8.31	10932	1986	10.89	10758	2150	13.61	10616	2302	16.40	10533	2446	19.34	10513
6700	5115	1485	4.54	14168	1671	6.73	13724	1840	9.09	13784	2001	11.64	14060	2161	14.49	14369	2314	17.56	14641	2455	20.79	14702			
8425	6431	1818	8.24	17966	1977	10.93	17504	2119	13.75	17239	2255	16.72	17260	2384	19.76	17447	2512	23.04	17676						
10150	7748	2158	13.70	21765	2296	16.90	21317	2422	20.21	21004	2538	23.60	20783												
11875	9065	2502	21.26	25557																					

XV (Extra High Velocity Nozzle)

Nozzle Outlet Area: 0.653 ft²

FAN INLET CFM	NOZ-ZLE OV	1" SP			3" SP			5" SP			7" SP			9" SP			11" SP			13" SP			15" SP		
		RPM	BHP	OUT FLOW	RPM	BHP	OUT FLOW	RPM	BHP	OUT FLOW	RPM	BHP	OUT FLOW	RPM	BHP	OUT FLOW	RPM	BHP	OUT FLOW	RPM	BHP	OUT FLOW	RPM	BHP	OUT FLOW
1625	2489	700	0.62	5020																					
3175	4862	930	1.76	9791	1259	3.77	9725	1513	6.04	9986	1732	8.57	10264												
4725	7236	1203	4.12	15033	1487	6.90	14423	1712	9.89	14387	1907	13.01	14507	2083	16.30	14663	2246	19.77	14857	2399	23.44	15073	2543	27.27	15252
6275	9609	1502	8.28	20093	1741	11.92	19576	1947	15.61	19174	2126	19.50	19092	2288	23.53	19115	2437	27.63	19182						
7825	11983	1815	14.86	25029	2018	19.31	24837	2201	23.89	24352	2368	28.47	24002	2519	33.18	23839									
9375	14357	2136	24.45	29949	2310	29.66	29996	2473	35.13	29589															
10925	16730	2461	37.63	34855																					

XV7 (Extra High Velocity Nozzle)

Nozzle Outlet Area: 0.653 ft²

FAN INLET CFM	NOZ-ZLE OV	1" SP			3" SP			5" SP			7" SP			9" SP			11" SP			13" SP			15" SP		
		RPM	BHP	OUT FLOW	RPM	BHP	OUT FLOW	RPM	BHP	OUT FLOW	RPM	BHP	OUT FLOW	RPM	BHP	OUT FLOW	RPM	BHP	OUT FLOW	RPM	BHP	OUT FLOW	RPM	BHP	OUT FLOW
1450	2221	689	0.49	4605																					
2900	4441	910	1.34	9170	1242	2.97	9087	1504	4.88	9344	1731	7.06	9625												
4350	6662	1185	3.17	14125	1462	5.36	13600	1688	7.77	13540	1887	10.37	13657	2067	13.13	13814	2236	16.11	14002	2395	19.27	14208	2544	22.57	14401
5800	8882	1489	6.47	18862	1716	9.27	18532	1918	12.20	18172	2097	15.31	18050	2260	18.62	18068	2412	22.04	18132						
7250	11103	1807	11.72	23520	1996	15.09	23518	2171	18.66	23109	2334	22.30	22800	2486	26.10	22628									
8700	13323	2133	19.42	28178	2293	23.33	28320	2446	27.50	28098															
10150	15544	2462	30.01	32815																					

XV5 (Extra High Velocity Nozzle)

Nozzle Outlet Area: 0.653 ft²

FAN INLET CFM	NOZ-ZLE OV	1" SP			3" SP			5" SP			7" SP			9" SP			11" SP			13" SP			15" SP		
		RPM	BHP	OUT FLOW	RPM	BHP	OUT FLOW	RPM	BHP	OUT FLOW	RPM	BHP	OUT FLOW	RPM	BHP	OUT FLOW	RPM	BHP	OUT FLOW	RPM	BHP	OUT FLOW	RPM	BHP	OUT FLOW
1100	1685	656	0.35	3352																					
2400	3675	890	1.04	7330	1214	2.36	7203	1458	3.84	7322	1669	5.51	7507	1854	7.30	7636									
3700	5666	1173	2.53	11665	1451	4.39	11178	1671	6.38	11068	1860	8.50	11099	2028	10.70	11168	2182	12.99	11238	2328	15.44	11349	2466	18.01	11477
5000	7657	1483	5.23	15808	1717	7.70	15496	1917	10.22	15168	2092	12.83	14998	2249	15.58	14968	2393	18.41	14973	2527	21.28	14992			
6300	9648	1808	9.58	19890	2006	12.61	19838	2183	15.77	19481	2345	18.96	19231	2493	22.18	19022									
7600	11639	2141	16.02	23961	2311	19.60	24026	2468	23.33	23837															
8900	13629	2479	24.96	28032																					

Class II = Light Blue section

Class III = Dark Blue section

Underlined figures indicate maximum static efficiency.

NOTES:

1. Performance certified is for installation Type A: Free inlet, free outlet.
2. Power rating (BHP) does not include transmission losses.
3. Performance ratings do not include the effects of appurtenances (accessories).
4. Performance ratings do not include the effects of crosswinds.

300 BAIFE

Impeller Type: Airfoil **Max Class I RPM = 1402** **Max Class III RPM = 2294** **Windband Outlet Area: 10.77 ft²**
Impeller Dia.: 30.00" **Max Class II RPM = 1799** **Tip Speed FPM = 7.85 x RPM**

LV (Low Velocity Nozzle)

Nozzle Outlet Area: 3.23 ft²

FAN INLET CFM	NOZ-ZLE OV	1" SP			3" SP			5" SP			7" SP			9" SP			11" SP			13" SP			15" SP		
		RPM	BHP	OUT FLOW	RPM	BHP	OUT FLOW	RPM	BHP	OUT FLOW	RPM	BHP	OUT FLOW	RPM	BHP	OUT FLOW	RPM	BHP	OUT FLOW	RPM	BHP	OUT FLOW	RPM	BHP	OUT FLOW
3325	1029	554	0.71	5699																					
7575	2345	755	2.11	12692	1007	4.78	12277	1241	8.08	12924	1455	11.98	14083	1639	16.13	14830									
11825	3661	1016	5.10	19808	1227	9.08	19699	1392	13.12	19338	1549	17.51	19189	1702	22.25	19440	1850	27.42	19829	1997	33.14	20507	2137	39.17	21290
16075	4977	1309	10.60	27053	1488	16.04	26995	1634	21.40	26858	1759	26.77	26626	1879	32.33	26347	1994	38.07	26092	2109	44.17	26073	2222	50.49	26207
20325	6293	1616	19.55	34318	1749	26.02	34030	1896	33.18	34155	2015	39.99	34067	2116	46.59	33852	2214	53.40	33661						
24575	7608	1930	32.88	41594	2038	40.50	41287	2152	48.61	41152	2275	57.34	41293												
28825	8924	2247	51.45	48853																					

LV7 (Low Velocity Nozzle)

Nozzle Outlet Area: 3.23 ft²

FAN INLET CFM	NOZ-ZLE OV	1" SP			3" SP			5" SP			7" SP			9" SP			11" SP			13" SP			15" SP		
		RPM	BHP	OUT FLOW	RPM	BHP	OUT FLOW	RPM	BHP	OUT FLOW	RPM	BHP	OUT FLOW	RPM	BHP	OUT FLOW	RPM	BHP	OUT FLOW	RPM	BHP	OUT FLOW	RPM	BHP	OUT FLOW
2225	689	575	0.58	4783																					
5425	1680	733	1.26	8859	1003	3.34	8610	1269	6.39	9637	1542	10.74	13554	1752	15.02	15505	1924	19.17	16629						
8625	2670	993	2.98	14062	1211	5.72	14072	1381	8.74	13906	1546	12.28	13707	1712	16.44	13648	1881	21.27	13252	2048	26.75	15716	2225	33.38	18428
11825	3661	1296	6.38	19359	1451	9.58	19240	1617	13.52	19330	1747	17.44	19223	1869	21.64	19095	1991	26.27	18967	2111	31.28	18835	2231	36.71	18722
15025	4652	1613	12.03	24675	1728	15.70	24502	1854	20.01	24443	1990	25.03	24548	2104	29.99	24514	2205	34.99	24436						
18225	5642	1934	20.47	29957	2027	24.73	29792	2124	29.41	29677	2229	34.69	29645												
21425	6633	2259	32.37	35251																					

LV5 (Low Velocity Nozzle)

Nozzle Outlet Area: 3.23 ft²

FAN INLET CFM	NOZ-ZLE OV	1" SP			3" SP			5" SP			7" SP			9" SP			11" SP			13" SP			15" SP		
		RPM	BHP	OUT FLOW	RPM	BHP	OUT FLOW	RPM	BHP	OUT FLOW	RPM	BHP	OUT FLOW	RPM	BHP	OUT FLOW	RPM	BHP	OUT FLOW	RPM	BHP	OUT FLOW	RPM	BHP	OUT FLOW
1575	488	580	0.46	3204																					
4125	1277	740	0.97	6689	1024	2.71	6246	1283	5.14	6292	1535	8.42	8497	1750	12.01	10007	1926	15.52	10724	2083	19.12	11180			
6675	2067	991	2.20	11024	1235	4.56	10751	1417	7.13	10464	1586	10.08	10183	1751	13.49	10044	1912	17.31	10070	2069	21.57	10184	2225	26.38	11229
9225	2856	1288	4.62	15422	1475	7.47	15103	1654	10.83	14945	1793	14.17	14720	1923	17.77	14516	2049	21.67	14315	2170	25.82	14114	2290	30.32	13974
11775	3646	1601	8.65	19810	1740	11.88	19459	1891	15.76	19262	2039	20.08	19162	2160	24.31	18996	2268	28.60	18830						
14325	4435	1920	14.70	24170	2034	18.46	23866	2150	22.62	23617	2275	27.37	23459												
16875	5224	2243	23.21	28524																					

MV (Medium Velocity Nozzle)

Nozzle Outlet Area: 2.42 ft²

FAN INLET CFM	NOZ-ZLE OV	1" SP			3" SP			5" SP			7" SP			9" SP			11" SP			13" SP			15" SP		
		RPM	BHP	OUT FLOW	RPM	BHP	OUT FLOW	RPM	BHP	OUT FLOW	RPM	BHP	OUT FLOW	RPM	BHP	OUT FLOW	RPM	BHP	OUT FLOW	RPM	BHP	OUT FLOW	RPM	BHP	OUT FLOW
4350	1795	595	0.97	7977																					
8050	3321	826	2.80	14860	1055	5.52	14686	1278	8.96	15496															
11750	4847	1093	6.54	22440	1275	10.22	21208	1435	14.24	21271	1586	18.52	21544	1740	23.43	22063	1892	28.86	22782	2037	34.59	23430			
15450	6374	1368	12.75	29711	1544	18.36	29055	1665	22.79	27917	1788	27.94	27874	1907	33.30	27979	2022	38.86	28184	2137	44.82	28442	2255	51.36	28874
19150	7900	1655	22.41	36971	1808	29.60	36519	1934	36.05	35786	2030	41.40	34755	2130	47.53	34530	2228	54.00	34550						
22850	9427	1949	36.39	44246	2074	44.64	43750	2202	53.41	43446															
26550	10953	2246	55.47	51500																					

MV7 (Medium Velocity Nozzle)

Nozzle Outlet Area: 2.42 ft²

FAN INLET CFM	NOZ-ZLE OV	1" SP			3" SP			5" SP			7" SP			9" SP			11" SP			13" SP			15" SP		
		RPM	BHP	OUT FLOW	RPM	BHP	OUT FLOW	RPM	BHP	OUT FLOW	RPM	BHP	OUT FLOW	RPM	BHP	OUT FLOW	RPM	BHP	OUT FLOW	RPM	BHP	OUT FLOW	RPM	BHP	OUT FLOW
3675	1516	614	0.76	6677																					
6475	2671	845	1.94	11839	1070	4.03	11735	1289	6.77	12463															
9275	3826	1112	4.31	17758	1288	6.99	16673	1445	9.98	16692	1598	13.35	16967	1752	17.25	17521	1903	21.61	18080						
12075	4981	1379	8.02	23333	1547	11.87	22403	1671	15.26	21699	1795	19.12	21693	1912	23.10	21768	2030	27.47	21979	2148	32.22	22311	2266	37.37	22752
14875	6137	1658	13.68	28913	1815	18.86	28356	1928	23.04	27346	2028	27.16	26759	2130	31.84	26708	2229	36.63	26716						
17675	7292	1944	21.78	34504	2076	27.79	33949	2199	33.77	33455	2288	38.49	32510												
20475	8447	2232	32.68	40056																					

MV5 (Medium Velocity Nozzle)

Nozzle Outlet Area: 2.42 ft²

FAN INLET CFM	NOZ-ZLE OV	1" SP			3" SP			5" SP			7" SP			9" SP			11" SP			13" SP			15" SP		
		RPM	BHP	OUT FLOW	RPM	BHP	OUT FLOW	RPM	BHP	OUT FLOW	RPM	BHP	OUT FLOW	RPM	BHP	OUT FLOW	RPM	BHP	OUT FLOW	RPM	BHP	OUT FLOW	RPM	BHP	OUT FLOW
2775	1145	619	0.59	4826																					
5025	2073	847	1.45	8661	1089	3.24	8684	1309	5.53	9183															
7275	3001	1114	3.18	13157	1307	5.46	12392	1475	8.02	12456	1632	10.88	12657	1785	14.13	13017	1934	17.77	13404	2085	21.92	13819			
9525	3929	1375	5.80	17349	1564	9.06	16650	1702	12.03	16234	1834	15.33	16249	1957	18.75	16329	2077	22.45	16470	2196	26.47	16698			
11775	4858	1651	9.83	21585	1833	14.28	21193	1957	17.83	20434	2069	21.47	20095	2178	25.47	20072	2283	29.60	20099						
14025	5786	1933	15.53	25805	2092	20.82	25442	2229	25.91	25072															
16275	6714	2219	23.26	30018																					

Class II = Light Blue section Class III = Dark Blue section Underlined figures indicate maximum static efficiency.

NOTES:
1. Performance certified is for installation Type A: Free inlet, free outlet.
2. Power rating (BHP) does not include transmission losses.
3. Performance ratings do not include the effects of appurtenances (accessories).
4. Performance ratings do not include the effects of crosswinds.

HV (High Velocity Nozzle)

Nozzle Outlet Area: 1.62 ft²

FAN INLET CFM	NOZ-ZLE OV	1" SP			3" SP			5" SP			7" SP			9" SP			11" SP			13" SP			15" SP		
		RPM	BHP	OUT FLOW	RPM	BHP	OUT FLOW	RPM	BHP	OUT FLOW	RPM	BHP	OUT FLOW	RPM	BHP	OUT FLOW	RPM	BHP	OUT FLOW	RPM	BHP	OUT FLOW	RPM	BHP	OUT FLOW
2925	1808	585	0.77	6598																					
6075	3755	766	2.15	12955	1051	4.78	14001	1293	8.03	13566	1501	11.54	13518												
9225	5701	1035	5.40	20038	1229	8.73	19849	1420	12.55	20689	1603	16.91	21259	1770	21.75	20943	1925	26.80	20719	2070	31.96	20560	2206	37.30	20526
12375	7648	1326	11.39	27259	1477	15.61	26475	1620	20.13	26508	1761	24.93	27098	1904	30.24	27718	2045	36.01	28331	2177	42.13	28560			
15525	9595	1627	21.05	34481	1753	26.22	33695	1869	31.59	33169	1983	37.23	33111	2096	43.06	33505	2208	49.16	33984						
18675	11542	1932	35.25	41656	2039	41.36	40889	2141	47.72	40350	2237	54.21	39930												
21825	13489	2241	55.01	48838																					

HV7 (High Velocity Nozzle)

Nozzle Outlet Area: 1.62 ft²

FAN INLET CFM	NOZ-ZLE OV	1" SP			3" SP			5" SP			7" SP			9" SP			11" SP			13" SP			15" SP		
		RPM	BHP	OUT FLOW	RPM	BHP	OUT FLOW	RPM	BHP	OUT FLOW	RPM	BHP	OUT FLOW	RPM	BHP	OUT FLOW	RPM	BHP	OUT FLOW	RPM	BHP	OUT FLOW	RPM	BHP	OUT FLOW
2500	1545	589	0.60	5598																					
5050	3121	776	1.52	10822	1057	3.59	11607	1293	6.18	11191	1496	9.06	11190												
7600	4697	1045	3.65	16611	1238	6.16	16482	1429	9.13	17170	1609	12.62	17484	1772	16.45	17064	1923	20.43	16900	2064	24.56	16796	2196	28.90	16752
10150	6273	1335	7.51	22540	1485	10.64	21810	1628	14.03	21917	1770	17.76	22405	1914	21.93	22944	2052	26.47	23330	2181	31.32	23278			
12700	7849	1634	13.68	28458	1760	17.47	27718	1876	21.47	27261	1990	25.68	27288	2103	30.10	27645	2216	34.84	28016						
15250	9425	1938	22.72	34359	2045	27.16	33630	2146	31.81	33102	2242	36.63	32742												
17800	11001	2245	35.21	40246																					

HV5 (High Velocity Nozzle)

Nozzle Outlet Area: 1.62 ft²

FAN INLET CFM	NOZ-ZLE OV	1" SP			3" SP			5" SP			7" SP			9" SP			11" SP			13" SP			15" SP		
		RPM	BHP	OUT FLOW	RPM	BHP	OUT FLOW	RPM	BHP	OUT FLOW	RPM	BHP	OUT FLOW	RPM	BHP	OUT FLOW	RPM	BHP	OUT FLOW	RPM	BHP	OUT FLOW	RPM	BHP	OUT FLOW
1875	1159	585	0.47	4011																					
4000	2472	775	1.15	8187	1064	2.87	8799	1296	5.01	8506	1494	7.38	8451	1670	10.05	8545									
6125	3786	1043	2.71	12738	1252	4.85	12663	1446	7.34	13145	1626	10.24	13462	1786	13.41	13227	1934	16.76	13068	2071	20.21	12972	2200	23.81	12922
8250	5099	1333	5.56	17436	1501	8.26	16895	1654	11.18	16985	1799	14.33	17323	1943	17.83	17699	2081	21.62	18037	2208	25.61	18104			
10375	6412	1633	10.11	22132	1776	13.42	21555	1904	16.90	21231	2026	20.54	21251	2143	24.31	21496	2258	28.33	21770						
12500	7726	1938	16.80	26807	2062	20.73	26247	2175	24.80	25851	2281	29.02	25605												
14625	9039	2247	26.08	31481																					

XV (Extra High Velocity Nozzle)

Nozzle Outlet Area: 0.806 ft²

FAN INLET CFM	NOZ-ZLE OV	1" SP			3" SP			5" SP			7" SP			9" SP			11" SP			13" SP			15" SP		
		RPM	BHP	OUT FLOW	RPM	BHP	OUT FLOW	RPM	BHP	OUT FLOW	RPM	BHP	OUT FLOW	RPM	BHP	OUT FLOW	RPM	BHP	OUT FLOW	RPM	BHP	OUT FLOW	RPM	BHP	OUT FLOW
2000	2481	630	0.77	6197																					
3925	4870	838	2.18	12116	1134	4.67	12032	1362	7.46	12338	1559	10.59	12680												
5850	7258	1085	5.12	18616	1340	8.56	17854	1542	12.24	17796	1717	16.09	17930	1876	20.18	18143	2023	24.49	18394	2160	29.00	18640	2290	33.76	18881
7775	9646	1356	10.32	24901	1571	14.84	24279	1756	19.41	23775	1916	24.19	23642	2062	29.20	23679	2196	34.27	23759						
9700	12035	1640	18.57	31040	1821	24.05	30785	1986	29.75	30204	2135	35.37	29740	2272	41.28	29566									
11625	14423	1930	30.56	37134	2086	37.01	37196	2232	43.77	36694															
13550	16811	2224	47.04	43221																					

XV7 (Extra High Velocity Nozzle)

Nozzle Outlet Area: 0.806 ft²

FAN INLET CFM	NOZ-ZLE OV	1" SP			3" SP			5" SP			7" SP			9" SP			11" SP			13" SP			15" SP		
		RPM	BHP	OUT FLOW	RPM	BHP	OUT FLOW	RPM	BHP	OUT FLOW	RPM	BHP	OUT FLOW	RPM	BHP	OUT FLOW	RPM	BHP	OUT FLOW	RPM	BHP	OUT FLOW	RPM	BHP	OUT FLOW
1800	2233	621	0.60	5715																					
3600	4467	821	1.67	11376	1120	3.70	11284	1355	6.06	11589	1559	8.75	11931												
5400	6700	1071	3.97	17541	1319	6.67	16878	1523	9.68	16824	1701	12.89	16942	1862	16.28	17112	2014	19.97	17347	2157	23.88	17602	2291	27.97	17840
7200	8933	1346	8.09	23407	1549	11.56	22996	1731	15.21	22567	1892	19.07	22412	2038	23.15	22419	2175	27.41	22508						
9000	11166	1634	14.67	29190	1803	18.84	29188	1961	23.31	28712	2107	27.82	28324	2243	32.50	28088									
10800	13400	1929	24.33	34969	2073	29.20	35160	2210	34.37	34898															
12600	15633	2228	37.67	40748																					

XV5 (Extra High Velocity Nozzle)

Nozzle Outlet Area: 0.806 ft²

FAN INLET CFM	NOZ-ZLE OV	1" SP			3" SP			5" SP			7" SP			9" SP			11" SP			13" SP			15" SP		
		RPM	BHP	OUT FLOW	RPM	BHP	OUT FLOW	RPM	BHP	OUT FLOW	RPM	BHP	OUT FLOW	RPM	BHP	OUT FLOW	RPM	BHP	OUT FLOW	RPM	BHP	OUT FLOW	RPM	BHP	OUT FLOW
1350	1675	589	0.43	4101																					
2950	3660	799	1.27	9004	1091	2.90	8855	1311	4.72	9006	1501	6.78	9235	1667	8.97	9375									
4550	5645	1052	3.08	14329	1304	5.39	13757	1502	7.84	13622	1671	10.43	13633	1823	13.14	13734	1962	15.98	13827	2094	19.01	13977	2218	22.17	14129
6150	7630	1331	6.40	19450	1542	9.44	19060	1722	12.54	18650	1880	15.76	18454	2021	19.13	18410	2151	22.62	18422	2272	26.17	18455			
7750	9615	1622	11.71	24467	1801	15.45	24404	1961	19.35	23971	2106	23.25	23640	2240	27.23	23400									
9350	11600	1921	19.59	29482	2074	23.99	29553	2216	28.59	29322															
10950	13586	2224	30.52	34490																					

Class II = Light Blue section

Class III = Dark Blue section

Underlined figures indicate maximum static efficiency.

NOTES:

1. Performance certified is for installation Type A: Free inlet, free outlet.
2. Power rating (BHP) does not include transmission losses.
3. Performance ratings do not include the effects of appurtenances (accessories).
4. Performance ratings do not include the effects of crosswinds.

330 BAIFE

Impeller Type: Airfoil **Max Class I RPM = 1275** **Max Class III RPM = 2085** **Windband Outlet Area: 13.04 ft²**
Impeller Dia.: 33.00" **Max Class II RPM = 1636** **Tip Speed FPM = 8.64 x RPM**

LV (Low Velocity Nozzle)

Nozzle Outlet Area: 3.91 ft²

FAN INLET CFM	NOZ-ZLE OV	1" SP			3" SP			5" SP			7" SP			9" SP			11" SP			13" SP			15" SP		
		RPM	BHP	OUT FLOW	RPM	BHP	OUT FLOW	RPM	BHP	OUT FLOW	RPM	BHP	OUT FLOW	RPM	BHP	OUT FLOW	RPM	BHP	OUT FLOW	RPM	BHP	OUT FLOW	RPM	BHP	OUT FLOW
4025	1030	504	0.86	6936																					
9175	2347	687	2.55	15381	916	5.80	14885	1128	9.78	15619	1323	14.51	17075	1490	19.52	17944									
14325	3665	924	6.18	23980	1117	11.03	23895	1266	15.90	23425	1408	21.19	23210	1547	26.93	23506	1682	33.20	24009	1816	40.16	24875	1943	47.45	25796
19475	4982	1191	12.86	32766	1354	19.47	32712	1487	25.97	32556	1600	32.45	32255	1709	39.18	31919	1814	46.17	31636	1918	53.53	31588	2021	61.21	31768
24625	6300	1471	23.75	41584	1592	31.60	41246	1725	40.24	41378	1833	48.48	41265	1926	56.58	41052	2014	64.74	40782						
29775	7617	1757	39.94	50404	1854	49.10	49999	1959	59.05	49888	2070	69.57	50032												
34925	8935	2045	62.45	59181																					

LV7 (Low Velocity Nozzle)

Nozzle Outlet Area: 3.91 ft²

FAN INLET CFM	NOZ-ZLE OV	1" SP			3" SP			5" SP			7" SP			9" SP			11" SP			13" SP			15" SP		
		RPM	BHP	OUT FLOW	RPM	BHP	OUT FLOW	RPM	BHP	OUT FLOW	RPM	BHP	OUT FLOW	RPM	BHP	OUT FLOW	RPM	BHP	OUT FLOW	RPM	BHP	OUT FLOW	RPM	BHP	OUT FLOW
2675	684	523	0.70	5806																					
6550	1676	666	1.52	10708	911	4.04	10371	1154	7.74	11711	1402	12.98	16411	1592	18.13	18725	1749	23.18	20117						
10425	2667	902	3.60	16997	1100	6.91	17000	1255	10.57	16811	1405	14.84	16564	1556	19.87	16485	1710	25.73	16036	1862	32.36	19038	2023	40.39	22316
14300	3658	1178	7.71	23421	1319	11.59	23277	1469	16.33	23359	1587	21.05	23224	1698	26.14	23068	1809	31.73	22911	1919	37.84	22787	2028	44.41	22642
18175	4650	1466	14.55	29849	1570	18.97	29625	1686	24.23	29590	1809	30.28	29698	1913	36.30	29669	2004	42.31	29552						
22050	5641	1758	24.77	36245	1843	29.93	36054	1931	35.60	35910	2026	41.96	35860												
25925	6632	2054	39.19	42662																					

LV5 (Low Velocity Nozzle)

Nozzle Outlet Area: 3.91 ft²

FAN INLET CFM	NOZ-ZLE OV	1" SP			3" SP			5" SP			7" SP			9" SP			11" SP			13" SP			15" SP		
		RPM	BHP	OUT FLOW	RPM	BHP	OUT FLOW	RPM	BHP	OUT FLOW	RPM	BHP	OUT FLOW	RPM	BHP	OUT FLOW	RPM	BHP	OUT FLOW	RPM	BHP	OUT FLOW	RPM	BHP	OUT FLOW
1900	486	527	0.55	3861																					
5000	1279	673	1.17	8100	931	3.28	7560	1166	6.22	7493	1395	10.18	10254	1591	14.54	12112	1751	18.80	12980	1894	23.16	13550			
8100	2072	903	2.68	13382	1125	5.54	13062	1289	8.64	12685	1443	12.23	12364	1592	16.33	12161	1738	20.95	12170	1881	26.12	12341	2022	31.91	13494
11200	2865	1174	5.63	18719	1343	9.08	18324	1506	13.16	18139	1633	17.23	17885	1750	21.57	17616	1865	26.31	17392	1975	31.35	17158	2083	36.75	16957
14300	3658	1460	10.56	24053	1587	14.51	23652	1723	19.19	23400	1858	24.46	23291	1968	29.59	23087	2065	34.75	22862						
17400	4451	1752	17.98	29363	1855	22.54	28993	1960	27.58	28692	2073	33.34	28499												
20500	5244	2047	28.41	34654																					

MV (Medium Velocity Nozzle)

Nozzle Outlet Area: 2.93 ft²

FAN INLET CFM	NOZ-ZLE OV	1" SP			3" SP			5" SP			7" SP			9" SP			11" SP			13" SP			15" SP		
		RPM	BHP	OUT FLOW	RPM	BHP	OUT FLOW	RPM	BHP	OUT FLOW	RPM	BHP	OUT FLOW	RPM	BHP	OUT FLOW	RPM	BHP	OUT FLOW	RPM	BHP	OUT FLOW	RPM	BHP	OUT FLOW
5250	1790	541	1.18	9657																					
9725	3316	750	3.38	17946	958	6.65	17722	1162	10.84	18764															
14200	4841	993	7.90	27130	1158	12.34	25622	1303	17.16	25676	1441	22.36	26028	1581	28.29	26646	1720	34.90	27567	1852	41.84	28373			
18675	6367	1242	15.37	35895	1402	22.14	35094	1513	27.54	33757	1625	33.78	33712	1733	40.24	33829	1837	46.92	34050	1942	54.15	34376	2050	62.12	34937
23150	7893	1504	27.09	44717	1643	35.77	44164	1757	43.53	43256	1844	49.97	41998	1935	57.39	41732	2025	65.29	41790						
27625	9419	1770	43.90	53478	1884	53.89	52886	2001	64.54	52539															
32100	10944	2040	66.94	62256																					

MV7 (Medium Velocity Nozzle)

Nozzle Outlet Area: 2.93 ft²

FAN INLET CFM	NOZ-ZLE OV	1" SP			3" SP			5" SP			7" SP			9" SP			11" SP			13" SP			15" SP		
		RPM	BHP	OUT FLOW	RPM	BHP	OUT FLOW	RPM	BHP	OUT FLOW	RPM	BHP	OUT FLOW	RPM	BHP	OUT FLOW	RPM	BHP	OUT FLOW	RPM	BHP	OUT FLOW	RPM	BHP	OUT FLOW
4450	1517	558	0.92	8074																					
7850	2676	769	2.36	14350	974	4.90	14243	1172	8.20	15091															
11250	3836	1013	5.24	21548	1172	8.48	20205	1316	12.14	20270	1454	16.20	20576	1593	20.89	21214	1730	26.17	21878						
14650	4995	1256	9.75	28297	1409	14.44	27188	1522	18.56	26338	1634	23.23	26312	1741	28.09	26428	1847	33.33	26649	1954	39.08	27045	2061	45.31	27574
18050	6154	1511	16.67	35083	1654	22.98	34428	1756	28.03	33188	1847	33.04	32473	1940	38.73	32421	2030	44.56	32434						
21450	7313	1772	26.56	41871	1892	33.87	41212	2004	41.16	40624	2085	46.90	39489												
24850	8473	2035	39.88	48619																					

MV5 (Medium Velocity Nozzle)

Nozzle Outlet Area: 2.93 ft²

FAN INLET CFM	NOZ-ZLE OV	1" SP			3" SP			5" SP			7" SP			9" SP			11" SP			13" SP			15" SP		
		RPM	BHP	OUT FLOW	RPM	BHP	OUT FLOW	RPM	BHP	OUT FLOW	RPM	BHP	OUT FLOW	RPM	BHP	OUT FLOW	RPM	BHP	OUT FLOW	RPM	BHP	OUT FLOW	RPM	BHP	OUT FLOW
3375	1151	563	0.72	5846																					
6100	2080	771	1.76	10502	991	3.93	10533	1191	6.71	11147															
8825	3009	1014	3.86	15948	1190	6.63	15034	1342	9.73	15097	1485	13.20	15350	1624	17.14	15787	1759	21.54	16250	1896	26.57	16769			
11550	3938	1253	7.07	21055	1425	11.04	20220	1549	14.60	19680	1669	18.60	19699	1781	22.76	19803	1889	27.20	19950	1997	32.06	20221			
14275	4867	1503	11.94	26161	1669	17.36	25702	1781	21.63	24768	1883	26.06	24359	1982	30.90	24330	2077	35.89	24354						
17000	5796	1760	18.88	31279	1905	25.31	30854	2029	31.46	30396															
19725	6725	2020	28.25	36376																					

Class II = Light Blue section Class III = Dark Blue section Underlined figures indicate maximum static efficiency.

NOTES:
1. Performance certified is for installation Type A: Free inlet, free outlet.
2. Power rating (BHP) does not include transmission losses.
3. Performance ratings do not include the effects of appurtenances (accessories).
4. Performance ratings do not include the effects of crosswinds.

HV (High Velocity Nozzle)

Nozzle Outlet Area: 1.96 ft²

FAN INLET CFM	NOZ-ZLE OV	1" SP			3" SP			5" SP			7" SP			9" SP			11" SP			13" SP			15" SP		
		RPM	BHP	OUT FLOW	RPM	BHP	OUT FLOW	RPM	BHP	OUT FLOW	RPM	BHP	OUT FLOW	RPM	BHP	OUT FLOW	RPM	BHP	OUT FLOW	RPM	BHP	OUT FLOW	RPM	BHP	OUT FLOW
3525	1801	531	0.93	7903																					
7350	3756	696	2.60	15662	956	5.79	16978	1176	9.73	16477	1365	13.98	16406												
11175	5710	942	6.56	24283	1118	10.59	24043	1291	15.19	25038	1458	20.50	25773	1610	26.38	25435	1750	32.45	25070	1882	38.71	24900	2005	45.13	24785
15000	7665	1207	13.83	33034	1345	18.99	32115	1474	24.43	32119	1602	30.25	32832	1732	36.69	33589	1860	43.66	34330	1980	51.08	34623			
18825	9619	1482	25.62	41814	1596	31.87	40851	1702	38.43	40238	1805	45.23	40144	1908	52.33	40632	2009	59.67	41189						
22650	11574	1761	42.99	50549	1858	50.40	49620	1950	58.06	48948	2037	65.92	48435												
26475	13528	2042	67.03	59240																					

HV7 (High Velocity Nozzle)

Nozzle Outlet Area: 1.96 ft²

FAN INLET CFM	NOZ-ZLE OV	1" SP			3" SP			5" SP			7" SP			9" SP			11" SP			13" SP			15" SP		
		RPM	BHP	OUT FLOW	RPM	BHP	OUT FLOW	RPM	BHP	OUT FLOW	RPM	BHP	OUT FLOW	RPM	BHP	OUT FLOW	RPM	BHP	OUT FLOW	RPM	BHP	OUT FLOW	RPM	BHP	OUT FLOW
3025	1546	536	0.73	6813																					
6100	3117	705	1.84	13081	961	4.34	14050	1175	7.47	13507	1359	10.93	13458												
9175	4688	949	4.40	20071	1124	7.42	19901	1298	11.02	20734	1462	15.24	21112	1610	19.86	20583	1747	24.65	20359	1876	29.68	20294	1996	34.92	20239
12250	6260	1211	9.03	27204	1348	12.81	26332	1478	16.91	26462	1607	21.39	27040	1739	26.47	27724	1864	31.93	28158	1982	37.84	28120			
15325	7831	1482	16.43	34344	1596	20.99	33427	1702	25.83	32885	1806	30.91	32930	1909	36.25	33367	2013	42.04	33847						
18400	9402	1757	27.26	41451	1855	32.65	40582	1947	38.26	39943	2034	44.06	39495												
21475	10973	2036	42.30	48573																					

HV5 (High Velocity Nozzle)

Nozzle Outlet Area: 1.96 ft²

FAN INLET CFM	NOZ-ZLE OV	1" SP			3" SP			5" SP			7" SP			9" SP			11" SP			13" SP			15" SP		
		RPM	BHP	OUT FLOW	RPM	BHP	OUT FLOW	RPM	BHP	OUT FLOW	RPM	BHP	OUT FLOW	RPM	BHP	OUT FLOW	RPM	BHP	OUT FLOW	RPM	BHP	OUT FLOW	RPM	BHP	OUT FLOW
2275	1162	532	0.56	4863																					
4825	2466	703	1.38	9872	966	3.46	10595	1178	6.06	10283	1357	8.90	10159	1518	12.15	10329									
7375	3769	945	3.25	15343	1135	5.82	15251	1313	8.85	15862	1476	12.33	16201	1622	16.16	15919	1757	20.22	15753	1881	24.36	15604	1999	28.73	15580
9925	5072	1206	6.63	20974	1359	9.88	20316	1499	13.41	20448	1631	17.19	20848	1763	21.43	21321	1888	25.99	21698	2004	30.82	21770			
12475	6375	1476	12.03	26603	1607	16.02	25914	1724	20.22	25532	1835	24.58	25562	1942	29.13	25869	2047	33.98	26197						
15025	7678	1751	19.96	32217	1864	24.68	31531	1968	29.60	31071	2064	34.64	30761												
17575	8981	2029	30.93	37816																					

XV (Extra High Velocity Nozzle)

Nozzle Outlet Area: 0.976 ft²

FAN INLET CFM	NOZ-ZLE OV	1" SP			3" SP			5" SP			7" SP			9" SP			11" SP			13" SP			15" SP		
		RPM	BHP	OUT FLOW	RPM	BHP	OUT FLOW	RPM	BHP	OUT FLOW	RPM	BHP	OUT FLOW	RPM	BHP	OUT FLOW	RPM	BHP	OUT FLOW	RPM	BHP	OUT FLOW	RPM	BHP	OUT FLOW
2425	2485	573	0.93	7510																					
4750	4867	762	2.64	14666	1031	5.65	14563	1239	9.05	14966	1418	12.83	15383												
7075	7249	986	6.19	22513	1218	10.35	21595	1402	14.82	21540	1561	19.47	21699	1705	24.39	21935	1839	29.63	22254	1964	35.11	22573	2081	40.79	22804
9400	9631	1232	12.46	30108	1427	17.91	29335	1595	23.42	28716	1741	29.23	28576	1874	35.30	28630	1996	41.43	28735						
11725	12013	1489	22.38	37503	1655	29.07	37235	1804	35.90	36493	1940	42.73	35950	2064	49.83	35720									
14050	14395	1752	36.81	44861	1895	44.68	44965	2028	52.86	44362															
16375	16778	2020	56.76	52246																					

XV7 (Extra High Velocity Nozzle)

Nozzle Outlet Area: 0.976 ft²

FAN INLET CFM	NOZ-ZLE OV	1" SP			3" SP			5" SP			7" SP			9" SP			11" SP			13" SP			15" SP		
		RPM	BHP	OUT FLOW	RPM	BHP	OUT FLOW	RPM	BHP	OUT FLOW	RPM	BHP	OUT FLOW	RPM	BHP	OUT FLOW	RPM	BHP	OUT FLOW	RPM	BHP	OUT FLOW	RPM	BHP	OUT FLOW
2175	2228	564	0.73	6891																					
4350	4457	746	2.02	13752	1018	4.47	13647	1232	7.33	14032	1417	10.57	14421												
6525	6685	973	4.79	21206	1199	8.07	20419	1384	11.69	20337	1546	15.57	20485	1693	19.70	20718	1831	24.15	20995	1961	28.89	21303	2083	33.84	21601
8700	8914	1223	9.77	28305	1407	13.95	27785	1572	18.34	27247	1719	23.03	27083	1852	27.97	27101	1976	33.09	27186						
10875	11142	1484	17.70	35282	1638	22.75	35284	1781	28.12	34683	1914	33.57	34220	2038	39.25	33948									
13050	13371	1752	29.36	42270	1882	35.19	42472	2007	41.45	42160															
15225	15599	2023	45.41	49242																					

XV5 (Extra High Velocity Nozzle)

Nozzle Outlet Area: 0.976 ft²

FAN INLET CFM	NOZ-ZLE OV	1" SP			3" SP			5" SP			7" SP			9" SP			11" SP			13" SP			15" SP		
		RPM	BHP	OUT FLOW	RPM	BHP	OUT FLOW	RPM	BHP	OUT FLOW	RPM	BHP	OUT FLOW	RPM	BHP	OUT FLOW	RPM	BHP	OUT FLOW	RPM	BHP	OUT FLOW	RPM	BHP	OUT FLOW
1650	1691	537	0.53	5017																					
3575	3663	727	1.54	10914	992	3.51	10721	1192	5.72	10904	1365	8.21	11192	1516	10.87	11367									
5500	5635	956	3.73	17329	1185	6.52	16633	1365	9.48	16469	1519	12.61	16493	1657	15.89	16610	1783	19.31	16708	1903	22.97	16889	2016	26.80	17082
7425	7608	1207	7.68	23465	1400	11.37	23012	1564	15.12	22522	1707	18.99	22266	1836	23.09	22237	1953	27.25	22214	2064	31.58	22285			
9350	9580	1471	14.07	29525	1634	18.58	29443	1779	23.25	28900	1912	28.00	28528	2033	32.77	28210									
11275	11552	1741	23.48	35555	1881	28.81	35651	2010	34.35	35358															
13200	13525	2014	36.50	41562																					

Class II = Light Blue section

Class III = Dark Blue section

Underlined figures indicate maximum static efficiency.

NOTES:

1. Performance certified is for installation Type A: Free inlet, free outlet.
2. Power rating (BHP) does not include transmission losses.
3. Performance ratings do not include the effects of appurtenances (accessories).
4. Performance ratings do not include the effects of crosswinds.

365 BAIFE

Impeller Type: Airfoil **Max Class I RPM = 1071** **Max Class III RPM = 1760** **Windband Outlet Area: 15.95 ft²**
Impeller Dia.: 36.50" **Max Class II RPM = 1388** **Tip Speed FPM = 9.56 x RPM**

LV (Low Velocity Nozzle)

Nozzle Outlet Area: 4.78 ft²

FAN INLET CFM	NOZ-ZLE OV	1" SP			3" SP			5" SP			7" SP			9" SP			11" SP			13" SP			15" SP		
		RPM	BHP	OUT FLOW	RPM	BHP	OUT FLOW	RPM	BHP	OUT FLOW	RPM	BHP	OUT FLOW	RPM	BHP	OUT FLOW	RPM	BHP	OUT FLOW	RPM	BHP	OUT FLOW	RPM	BHP	OUT FLOW
4925	**1030**	456	1.06	8533																					
10700	**2238**	603	2.87	17901	818	6.73	17446	1017	11.59	18680	1193	17.21	20334	1344	23.19	21266									
16475	**3445**	798	6.60	27577	975	12.17	27385	1116	17.88	26788	1252	24.19	26840	1383	31.06	27346	1512	38.78	28246	1636	47.12	29484	1751	55.75	30586
22250	**4653**	1015	13.26	37394	1172	20.89	37403	1291	28.22	37072	1399	35.77	36673	1501	43.54	36189	1602	51.85	36041	1702	60.59	36255			
28025	**5861**	1245	23.97	47286	1365	33.07	46943	1489	42.86	47084	1585	52.08	46834	1672	61.35	46519	1757	70.88	46168						
33800	**7068**	1480	39.71	57154	1576	50.28	56698	1681	61.79	56661															
39575	**8276**	1718	61.53	67014																					

LV7 (Low Velocity Nozzle)

Nozzle Outlet Area: 4.78 ft²

FAN INLET CFM	NOZ-ZLE OV	1" SP			3" SP			5" SP			7" SP			9" SP			11" SP			13" SP			15" SP		
		RPM	BHP	OUT FLOW	RPM	BHP	OUT FLOW	RPM	BHP	OUT FLOW	RPM	BHP	OUT FLOW	RPM	BHP	OUT FLOW	RPM	BHP	OUT FLOW	RPM	BHP	OUT FLOW	RPM	BHP	OUT FLOW
3275	**685**	473	0.85	7116																					
7625	**1595**	586	1.72	12470	816	4.77	12028	1049	9.45	15079	1272	15.74	20379	1435	21.59	22602									
11975	**2504**	776	3.83	19488	962	7.71	19515	1109	12.10	19242	1253	17.34	18961	1400	23.61	19258	1547	30.93	21150	1700	39.81	25166			
16325	**3414**	1002	7.92	26709	1143	12.55	26614	1278	17.95	26618	1388	23.51	26441	1496	29.69	26249	1602	36.46	26037	1708	43.92	25877			
20675	**4324**	1239	14.62	33928	1341	19.76	33652	1459	26.13	33718	1571	33.06	33796	1663	39.87	33672	1748	46.91	33495						
25025	**5233**	1481	24.62	41139	1563	30.50	40858	1651	37.20	40729	1749	44.95	40770												
29375	**6143**	1725	38.56	48325																					

LV5 (Low Velocity Nozzle)

Nozzle Outlet Area: 4.78 ft²

FAN INLET CFM	NOZ-ZLE OV	1" SP			3" SP			5" SP			7" SP			9" SP			11" SP			13" SP			15" SP		
		RPM	BHP	OUT FLOW	RPM	BHP	OUT FLOW	RPM	BHP	OUT FLOW	RPM	BHP	OUT FLOW	RPM	BHP	OUT FLOW	RPM	BHP	OUT FLOW	RPM	BHP	OUT FLOW	RPM	BHP	OUT FLOW
2325	**486**	477	0.68	4764																					
5800	**1213**	591	1.33	9347	833	3.88	8720	1055	7.53	9440	1267	12.43	12961	1436	17.42	14652	1578	22.40	15488						
9275	**1940**	778	2.87	15283	983	6.19	14870	1138	9.89	14395	1284	14.24	14028	1426	19.27	13898	1565	25.00	14040	1701	31.49	15190			
12750	**2666**	999	5.80	21283	1166	9.90	20847	1310	14.50	20529	1427	19.24	20176	1540	24.47	19866	1648	30.14	19570	1753	36.26	19301			
16225	**3393**	1233	10.61	27255	1357	15.19	26743	1493	20.82	26508	1612	26.71	26287	1710	32.53	25998									
19700	**4120**	1473	17.78	33205	1574	23.04	32731	1678	28.96	32363															
23175	**4846**	1717	27.87	39159																					

MV (Medium Velocity Nozzle)

Nozzle Outlet Area: 3.59 ft²

FAN INLET CFM	NOZ-ZLE OV	1" SP			3" SP			5" SP			7" SP			9" SP			11" SP			13" SP			15" SP		
		RPM	BHP	OUT FLOW	RPM	BHP	OUT FLOW	RPM	BHP	OUT FLOW	RPM	BHP	OUT FLOW	RPM	BHP	OUT FLOW	RPM	BHP	OUT FLOW	RPM	BHP	OUT FLOW	RPM	BHP	OUT FLOW
6425	**1791**	489	1.44	11806																					
11400	**3177**	658	3.77	20888	854	7.71	20918	1044	12.76	22260															
16375	**4564**	858	8.43	31212	1011	13.55	29523	1148	19.22	29735	1280	25.47	30258	1415	32.76	31330	1543	40.56	32342						
21350	**5950**	1060	15.85	40982	1206	23.28	39698	1313	29.70	38510	1420	37.00	38593	1522	44.51	38848	1623	52.58	39235	1726	61.46	39835			
26325	**7337**	1273	27.26	50786	1407	37.15	50074	1506	45.26	48547	1592	53.04	47511	1680	61.88	47500									
31300	**8724**	1490	43.46	60530	1603	55.01	59843	1710	66.58	59217															
36275	**10110**	1711	65.51	70308																					

MV7 (Medium Velocity Nozzle)

Nozzle Outlet Area: 3.59 ft²

FAN INLET CFM	NOZ-ZLE OV	1" SP			3" SP			5" SP			7" SP			9" SP			11" SP			13" SP			15" SP		
		RPM	BHP	OUT FLOW	RPM	BHP	OUT FLOW	RPM	BHP	OUT FLOW	RPM	BHP	OUT FLOW	RPM	BHP	OUT FLOW	RPM	BHP	OUT FLOW	RPM	BHP	OUT FLOW	RPM	BHP	OUT FLOW
5450	**1519**	505	1.13	9901																					
9225	**2571**	676	2.66	16776	868	5.72	16833	1054	9.78	17994															
13000	**3623**	876	5.64	24811	1024	9.41	23343	1159	13.70	23486	1292	18.67	24059	1424	24.41	24937	1558	31.11	26030						
16775	**4675**	1074	10.16	32350	1212	15.27	30724	1322	20.26	30136	1428	25.68	30179	1530	31.45	30398	1634	37.92	30879	1737	44.94	31532			
20550	**5727**	1281	16.92	39883	1415	23.96	38953	1506	29.41	37289	1597	35.60	36927	1685	42.16	36899									
24325	**6780**	1493	26.43	47403	1611	34.85	46611	1709	42.50	45574															
28100	**7832**	1708	39.21	54913																					

MV5 (Medium Velocity Nozzle)

Nozzle Outlet Area: 3.59 ft²

FAN INLET CFM	NOZ-ZLE OV	1" SP			3" SP			5" SP			7" SP			9" SP			11" SP			13" SP			15" SP		
		RPM	BHP	OUT FLOW	RPM	BHP	OUT FLOW	RPM	BHP	OUT FLOW	RPM	BHP	OUT FLOW	RPM	BHP	OUT FLOW	RPM	BHP	OUT FLOW	RPM	BHP	OUT FLOW	RPM	BHP	OUT FLOW
4125	**1150**	509	0.88	7152																					
7150	**1993**	677	1.99	12245	882	4.58	12401	1069	7.98	13219															
10175	**2836**	877	4.17	18327	1040	7.38	17344	1182	11.03	17476	1318	15.24	17905	1449	20.04	18500	1579	25.54	19105						
13200	**3679**	1071	7.36	24003	1226	11.71	22820	1346	16.00	22490	1458	20.62	22546	1564	25.55	22730	1669	31.00	23048						
16225	**4522**	1274	12.12	29682	1428	18.14	29016	1530	22.87	27865	1628	28.16	27645	1722	33.79	27660									
19250	**5365**	1483	18.82	35364	1623	26.14	34832	1731	32.58	34025															
22275	**6208**	1695	27.78	41027																					

Class II = Light Blue section Class III = Dark Blue section Underlined figures indicate maximum static efficiency.

NOTES:
1. Performance certified is for installation Type A: Free inlet, free outlet.
2. Power rating (BHP) does not include transmission losses.
3. Performance ratings do not include the effects of appurtenances (accessories).
4. Performance ratings do not include the effects of crosswinds.

HV (High Velocity Nozzle)

Nozzle Outlet Area: 2.39 ft²

FAN INLET CFM	NOZ-ZLE OV	1" SP			3" SP			5" SP			7" SP			9" SP			11" SP			13" SP			15" SP		
		RPM	BHP	OUT FLOW	RPM	BHP	OUT FLOW	RPM	BHP	OUT FLOW	RPM	BHP	OUT FLOW	RPM	BHP	OUT FLOW	RPM	BHP	OUT FLOW	RPM	BHP	OUT FLOW	RPM	BHP	OUT FLOW
4325	1807	481	1.14	9790																					
8600	3592	613	2.93	18381	855	6.75	19825	1057	11.43	19175	1228	16.51	19203												
12875	5378	812	6.94	27878	980	11.66	27920	1146	17.18	29214	1300	23.55	29586	1440	30.48	28974	1569	37.58	28637	1690	45.00	28608			
17150	7164	1029	14.18	37674	1160	20.10	36587	1285	26.46	37013	1409	33.39	37949	1535	41.15	39016	1653	49.48	39579						
21425	8949	1254	25.69	47473	1364	32.89	46308	1465	40.41	45656	1566	48.38	45978	1664	56.53	46680									
25700	10735	1483	42.50	57236	1577	50.97	56087	1665	59.75	55264	1750	68.94	54826												
29975	12521	1715	65.73	66995																					

HV7 (High Velocity Nozzle)

Nozzle Outlet Area: 2.39 ft²

FAN INLET CFM	NOZ-ZLE OV	1" SP			3" SP			5" SP			7" SP			9" SP			11" SP			13" SP			15" SP		
		RPM	BHP	OUT FLOW	RPM	BHP	OUT FLOW	RPM	BHP	OUT FLOW	RPM	BHP	OUT FLOW	RPM	BHP	OUT FLOW	RPM	BHP	OUT FLOW	RPM	BHP	OUT FLOW	RPM	BHP	OUT FLOW
3700	1546	484	0.89	8277																					
7150	2987	621	2.08	15374	859	5.09	16363	1056	8.84	15846	1223	13.04	15848												
10600	4428	819	4.70	23072	986	8.25	23145	1153	12.63	24254	1303	17.68	24132	1440	23.16	23677	1566	28.83	23471	1683	34.81	23382			
14050	5869	1035	9.36	31107	1165	13.73	30104	1290	18.53	30567	1416	23.96	31375	1541	30.07	32196	1656	36.65	32298						
17500	7310	1258	16.67	39118	1367	21.92	37984	1469	27.55	37488	1569	33.45	37837	1669	39.83	38462									
20950	8751	1485	27.29	47105	1579	33.45	46012	1667	39.93	45248	1752	46.73	44901												
24400	10192	1715	41.90	55089																					

HV5 (High Velocity Nozzle)

Nozzle Outlet Area: 2.39 ft²

FAN INLET CFM	NOZ-ZLE OV	1" SP			3" SP			5" SP			7" SP			9" SP			11" SP			13" SP			15" SP		
		RPM	BHP	OUT FLOW	RPM	BHP	OUT FLOW	RPM	BHP	OUT FLOW	RPM	BHP	OUT FLOW	RPM	BHP	OUT FLOW	RPM	BHP	OUT FLOW	RPM	BHP	OUT FLOW	RPM	BHP	OUT FLOW
2775	1159	481	0.69	5949																					
5650	2360	620	1.57	11607	863	4.06	12351	1057	7.17	12006	1221	10.63	11972												
8525	3561	818	3.51	17674	997	6.52	17745	1165	10.16	18514	1315	14.36	18660	1449	18.93	18252	1572	23.68	18111	1686	28.64	18005			
11400	4762	1033	6.92	24011	1178	10.70	23285	1310	14.80	23629	1437	19.36	24173	1562	24.47	24796	1676	29.90	25016						
14275	5963	1257	12.33	30378	1381	16.93	29527	1492	21.79	29170	1598	26.89	29429	1700	32.28	29865									
17150	7164	1485	20.20	36716	1593	25.61	35871	1691	31.27	35313															
20025	8365	1716	31.03	43044																					

XV (Extra High Velocity Nozzle)

Nozzle Outlet Area: 1.19 ft²

FAN INLET CFM	NOZ-ZLE OV	1" SP			3" SP			5" SP			7" SP			9" SP			11" SP			13" SP			15" SP		
		RPM	BHP	OUT FLOW	RPM	BHP	OUT FLOW	RPM	BHP	OUT FLOW	RPM	BHP	OUT FLOW	RPM	BHP	OUT FLOW	RPM	BHP	OUT FLOW	RPM	BHP	OUT FLOW	RPM	BHP	OUT FLOW
2950	2471	517	1.13	9127																					
5550	4648	671	2.95	17033	918	6.51	17060	1109	10.58	17621	1272	15.11	18048												
8150	6826	854	6.60	25848	1069	11.41	24812	1239	16.65	24866	1385	22.10	25114	1518	27.95	25463	1641	34.16	25890	1755	40.65	26218			
10750	9003	1054	12.83	34428	1239	19.10	33376	1395	25.50	32777	1529	32.23	32682	1652	39.26	32826									
13350	11181	1264	22.55	42718	1423	30.25	42167	1564	38.03	41308	1690	45.88	40752												
15950	13358	1480	36.60	50966	1617	45.54	50913	1744	54.92	50058															
18550	15536	1700	55.85	59220																					

XV7 (Extra High Velocity Nozzle)

Nozzle Outlet Area: 1.19 ft²

FAN INLET CFM	NOZ-ZLE OV	1" SP			3" SP			5" SP			7" SP			9" SP			11" SP			13" SP			15" SP		
		RPM	BHP	OUT FLOW	RPM	BHP	OUT FLOW	RPM	BHP	OUT FLOW	RPM	BHP	OUT FLOW	RPM	BHP	OUT FLOW	RPM	BHP	OUT FLOW	RPM	BHP	OUT FLOW	RPM	BHP	OUT FLOW
2650	2219	510	0.89	8435																					
5100	4271	659	2.28	16067	908	5.19	16020	1105	8.64	16552	1273	12.52	17014												
7550	6323	844	5.14	24458	1055	8.98	23543	1226	13.27	23562	1375	17.84	23804	1511	22.79	24124	1638	28.12	24481	1757	33.79	24885			
10000	8375	1050	10.19	32558	1225	15.05	31838	1379	20.17	31233	1514	25.68	31133	1637	31.47	31196	1751	37.45	31350						
12450	10427	1265	18.09	40420	1412	23.92	40231	1548	30.14	39530	1672	36.42	38960												
14900	12479	1486	29.57	48272	1612	36.36	48480	1731	43.58	47887															
17350	14531	1711	45.39	56144																					

XV5 (Extra High Velocity Nozzle)

Nozzle Outlet Area: 1.19 ft²

FAN INLET CFM	NOZ-ZLE OV	1" SP			3" SP			5" SP			7" SP			9" SP			11" SP			13" SP			15" SP		
		RPM	BHP	OUT FLOW	RPM	BHP	OUT FLOW	RPM	BHP	OUT FLOW	RPM	BHP	OUT FLOW	RPM	BHP	OUT FLOW	RPM	BHP	OUT FLOW	RPM	BHP	OUT FLOW	RPM	BHP	OUT FLOW
2000	1675	485	0.64	6113																					
4175	3497	641	1.73	12680	884	4.06	12563	1067	6.70	12813	1224	9.68	13138												
6350	5318	829	4.00	19938	1042	7.24	19130	1207	10.73	19020	1348	14.40	19090	1474	18.25	19232	1591	22.37	19420	1701	26.75	19670			
8525	7140	1037	8.03	26971	1217	12.25	26270	1370	16.60	25723	1502	21.17	25552	1619	25.90	25503	1728	30.82	25566						
10700	8961	1254	14.39	33789	1409	19.59	33554	1546	24.99	32928	1669	30.39	32431												
12875	10783	1478	23.73	40610	1612	29.85	40671	1735	36.28	40194															
15050	12605	1705	36.60	47405																					

Class II = Light Blue section

Class III = Dark Blue section

Underlined figures indicate maximum static efficiency.

NOTES:

1. Performance certified is for installation Type A: Free inlet, free outlet.
2. Power rating (BHP) does not include transmission losses.
3. Performance ratings do not include the effects of appurtenances (accessories).
4. Performance ratings do not include the effects of crosswinds.

402 BAIFE

Impeller Type: Airfoil **Max Class I RPM = 971** **Max Class III RPM = 1596** **Windband Outlet Area: 19.39 ft²**
Impeller Dia.: 40.25" **Max Class II RPM = 1258** **Tip Speed FPM = 10.54 x RPM**

LV (Low Velocity Nozzle)

Nozzle Outlet Area: 5.82 ft²

FAN INLET CFM	NOZ-ZLE OV	1" SP			3" SP			5" SP			7" SP			9" SP			11" SP			13" SP			15" SP		
		RPM	BHP	OUT FLOW	RPM	BHP	OUT FLOW	RPM	BHP	OUT FLOW	RPM	BHP	OUT FLOW	RPM	BHP	OUT FLOW	RPM	BHP	OUT FLOW	RPM	BHP	OUT FLOW	RPM	BHP	OUT FLOW
5975	**1028**	413	1.28	10275																					
13000	**2236**	546	3.47	21713	742	8.19	21237	922	14.07	22662	1082	20.93	24764	1218	28.13	25616									
20025	**3444**	724	8.04	33557	884	14.79	33290	1012	21.73	32573	1135	29.39	32603	1254	37.75	33234	1371	47.14	34323	1484	57.33	35949	1588	67.80	37225
27050	**4652**	921	16.16	45506	1063	25.42	45496	1170	34.25	45031	1268	43.43	44543	1361	52.92	43994	1453	63.07	43852	1544	73.75	44147			
34075	**5860**	1129	29.15	57501	1238	40.23	57096	1350	52.09	57237	1437	63.29	56929	1516	74.57	56554	1593	86.15	56118						
41100	**7068**	1342	48.27	69495	1429	61.12	68938	1525	75.23	68942															
48125	**8276**	1558	74.83	81495																					

LV7 (Low Velocity Nozzle)

Nozzle Outlet Area: 5.82 ft²

FAN INLET CFM	NOZ-ZLE OV	1" SP			3" SP			5" SP			7" SP			9" SP			11" SP			13" SP			15" SP		
		RPM	BHP	OUT FLOW	RPM	BHP	OUT FLOW	RPM	BHP	OUT FLOW	RPM	BHP	OUT FLOW	RPM	BHP	OUT FLOW	RPM	BHP	OUT FLOW	RPM	BHP	OUT FLOW	RPM	BHP	OUT FLOW
4000	**688**	428	1.03	8541																					
9300	**1599**	532	2.10	15195	741	5.83	14755	951	11.50	18298	1153	19.14	24738	1302	26.32	27551									
14600	**2511**	705	4.68	23756	873	9.40	23764	1006	14.73	23422	1137	21.13	23141	1270	28.76	23518	1403	37.66	25754	1541	48.41	30526			
19900	**3422**	911	9.70	32577	1038	15.32	32440	1161	21.94	32477	1260	28.68	32230	1358	36.21	32017	1453	44.36	31684	1549	53.44	31483			
25200	**4334**	1126	17.89	41355	1219	24.20	41054	1325	31.91	41103	1426	40.31	41168	1510	48.66	41050	1587	57.23	40838						
30500	**5245**	1345	30.07	50105	1420	37.29	49796	1499	45.39	49612	1588	54.85	49678												
35800	**6156**	1567	47.13	58871																					

LV5 (Low Velocity Nozzle)

Nozzle Outlet Area: 5.82 ft²

FAN INLET CFM	NOZ-ZLE OV	1" SP			3" SP			5" SP			7" SP			9" SP			11" SP			13" SP			15" SP		
		RPM	BHP	OUT FLOW	RPM	BHP	OUT FLOW	RPM	BHP	OUT FLOW	RPM	BHP	OUT FLOW	RPM	BHP	OUT FLOW	RPM	BHP	OUT FLOW	RPM	BHP	OUT FLOW	RPM	BHP	OUT FLOW
2825	**486**	432	0.82	5736																					
7050	**1212**	536	1.62	11369	755	4.71	10570	956	9.13	11170	1149	15.11	15764	1302	21.16	17797	1431	27.23	18836						
11275	**1939**	705	3.48	18564	891	7.52	18064	1032	12.03	17507	1164	17.30	17030	1294	23.47	16995	1419	30.38	17017	1543	38.33	18608			
15500	**2666**	905	7.03	25848	1057	12.03	25335	1188	17.64	24967	1294	23.39	24534	1396	29.73	24130	1494	36.62	23769	1590	44.12	23494			
19725	**3392**	1118	12.89	33138	1230	18.45	32498	1354	25.32	32238	1462	32.50	31974	1551	39.58	31629									
23950	**4119**	1336	21.64	40385	1427	27.99	39789	1522	35.24	39367															
28175	**4845**	1556	33.82	47584																					

MV (Medium Velocity Nozzle)

Nozzle Outlet Area: 4.36 ft²

FAN INLET CFM	NOZ-ZLE OV	1" SP			3" SP			5" SP			7" SP			9" SP			11" SP			13" SP			15" SP		
		RPM	BHP	OUT FLOW	RPM	BHP	OUT FLOW	RPM	BHP	OUT FLOW	RPM	BHP	OUT FLOW	RPM	BHP	OUT FLOW	RPM	BHP	OUT FLOW	RPM	BHP	OUT FLOW	RPM	BHP	OUT FLOW
7825	**1793**	444	1.76	14407																					
13875	**3180**	597	4.59	25422	774	9.36	25399	947	15.53	27109															
19925	**4567**	779	10.29	38018	917	16.49	35915	1041	23.37	36155	1161	31.00	36819	1283	39.83	38076	1400	49.42	39467						
25975	**5953**	962	19.32	49883	1094	28.34	48300	1191	36.15	46852	1288	45.03	46952	1380	54.11	47224	1472	63.98	47729	1566	74.87	48526			
32025	**7340**	1154	33.12	61734	1276	45.18	60897	1366	55.07	59056	1444	64.55	57797	1523	75.18	57728									
38075	**8727**	1352	52.94	73655	1454	66.94	72793	1551	81.02	72031															
44125	**10113**	1552	79.73	85521																					

MV7 (Medium Velocity Nozzle)

Nozzle Outlet Area: 4.36 ft²

FAN INLET CFM	NOZ-ZLE OV	1" SP			3" SP			5" SP			7" SP			9" SP			11" SP			13" SP			15" SP		
		RPM	BHP	OUT FLOW	RPM	BHP	OUT FLOW	RPM	BHP	OUT FLOW	RPM	BHP	OUT FLOW	RPM	BHP	OUT FLOW	RPM	BHP	OUT FLOW	RPM	BHP	OUT FLOW	RPM	BHP	OUT FLOW
6625	**1518**	458	1.37	12043																					
11225	**2573**	613	3.23	20400	787	6.95	20461	956	11.90	21907															
15825	**3627**	795	6.88	30203	929	11.46	28407	1051	16.66	28558	1172	22.73	29282	1292	29.73	30386	1412	37.78	31462						
20425	**4681**	975	12.39	39391	1100	18.62	37413	1199	24.64	36656	1296	31.31	36756	1388	38.29	36999	1482	46.14	37565	1575	54.65	38331			
25025	**5736**	1163	20.64	48563	1285	29.26	47466	1368	35.94	45470	1449	43.36	44946	1529	51.36	44925									
29625	**6790**	1356	32.29	57743	1463	42.56	56788	1552	51.90	55541															
34225	**7844**	1551	47.87	66875																					

MV5 (Medium Velocity Nozzle)

Nozzle Outlet Area: 4.36 ft²

FAN INLET CFM	NOZ-ZLE OV	1" SP			3" SP			5" SP			7" SP			9" SP			11" SP			13" SP			15" SP		
		RPM	BHP	OUT FLOW	RPM	BHP	OUT FLOW	RPM	BHP	OUT FLOW	RPM	BHP	OUT FLOW	RPM	BHP	OUT FLOW	RPM	BHP	OUT FLOW	RPM	BHP	OUT FLOW	RPM	BHP	OUT FLOW
5025	**1152**	462	1.07	8717																					
8725	**2000**	616	2.44	14973	801	5.60	15135	970	9.73	16125															
12425	**2848**	798	5.11	22395	945	9.03	21166	1074	13.49	21344	1196	18.58	21812	1315	24.43	22558	1432	31.09	23248						
16125	**3696**	975	9.06	29333	1115	14.36	27882	1224	19.60	27483	1326	25.29	27575	1421	31.25	27761	1516	37.89	28145						
19825	**4544**	1160	14.91	36267	1300	22.31	35489	1392	28.08	34067	1481	34.55	33799	1566	41.42	33816									
23525	**5392**	1351	23.19	43225	1478	32.17	42603	1575	40.01	41594															
27225	**6240**	1544	34.23	50136																					

Class II = Light Blue section Class III = Dark Blue section Underlined figures indicate maximum static efficiency.

NOTES:
1. Performance certified is for installation Type A: Free inlet, free outlet.
2. Power rating (BHP) does not include transmission losses.
3. Performance ratings do not include the effects of appurtenances (accessories).
4. Performance ratings do not include the effects of crosswinds.

HV (High Velocity Nozzle)

Nozzle Outlet Area: 2.91 ft²

FAN INLET CFM	NOZ-ZLE OV	1" SP			3" SP			5" SP			7" SP			9" SP			11" SP			13" SP			15" SP		
		RPM	BHP	OUT FLOW	RPM	BHP	OUT FLOW	RPM	BHP	OUT FLOW	RPM	BHP	OUT FLOW	RPM	BHP	OUT FLOW	RPM	BHP	OUT FLOW	RPM	BHP	OUT FLOW	RPM	BHP	OUT FLOW
5250	1803	436	1.38	11872																					
10475	3597	556	3.56	22359	776	8.23	24205	959	13.94	23421	1114	20.12	23426												
15700	5391	738	8.50	34003	890	14.25	34038	1040	20.96	35598	1180	28.75	36157	1306	37.13	35261	1424	45.87	35077	1533	54.84	34884			
20925	7186	936	17.40	45983	1054	24.59	44626	1167	32.34	45121	1279	40.77	46247	1393	50.22	47541	1500	60.36	48257						
26150	8980	1141	31.56	57950	1240	40.30	56506	1332	49.54	55747	1423	59.23	56096	1512	69.22	56972									
31375	10774	1350	52.28	69894	1435	62.63	68502	1514	73.26	67466	1591	84.50	66933												
36600	12569	1561	80.83	81792																					

HV7 (High Velocity Nozzle)

Nozzle Outlet Area: 2.91 ft²

FAN INLET CFM	NOZ-ZLE OV	1" SP			3" SP			5" SP			7" SP			9" SP			11" SP			13" SP			15" SP		
		RPM	BHP	OUT FLOW	RPM	BHP	OUT FLOW	RPM	BHP	OUT FLOW	RPM	BHP	OUT FLOW	RPM	BHP	OUT FLOW	RPM	BHP	OUT FLOW	RPM	BHP	OUT FLOW	RPM	BHP	OUT FLOW
4500	1545	439	1.08	10077																					
8700	2988	563	2.53	18688	779	6.19	19902	957	10.73	19180	1110	15.90	19408												
12900	4430	744	5.75	28124	895	10.07	28193	1045	15.33	29448	1182	21.52	29397	1306	28.18	28814	1420	35.06	28527	1526	42.33	28404			
17100	5872	939	11.39	37849	1057	16.72	36636	1171	22.60	37235	1284	29.14	38149	1397	36.54	39116	1502	44.60	39306						
21300	7315	1142	20.34	47627	1241	26.74	46261	1333	33.57	45633	1424	40.78	46074	1514	48.48	46801									
25500	8757	1348	33.29	57346	1433	40.76	56009	1513	48.68	55093	1589	56.85	54614												
29700	10199	1557	51.13	67074																					

HV5 (High Velocity Nozzle)

Nozzle Outlet Area: 2.91 ft²

FAN INLET CFM	NOZ-ZLE OV	1" SP			3" SP			5" SP			7" SP			9" SP			11" SP			13" SP			15" SP		
		RPM	BHP	OUT FLOW	RPM	BHP	OUT FLOW	RPM	BHP	OUT FLOW	RPM	BHP	OUT FLOW	RPM	BHP	OUT FLOW	RPM	BHP	OUT FLOW	RPM	BHP	OUT FLOW	RPM	BHP	OUT FLOW
3375	1159	436	0.84	7218																					
6850	2352	561	1.90	14064	782	4.93	14969	958	8.70	14549	1106	12.87	14429												
10325	3546	739	4.22	21380	903	7.90	21531	1055	12.29	22431	1191	17.39	22563	1313	22.95	22105	1424	28.68	21876	1528	34.73	21802			
13800	4739	933	8.32	29052	1065	12.90	28181	1185	17.87	28611	1301	23.41	29292	1414	29.59	30013	1518	36.21	30286						
17275	5932	1135	14.81	36757	1248	20.38	35729	1349	26.27	35306	1445	32.42	35619	1538	38.97	36157									
20750	7126	1340	24.20	44403	1439	30.80	43400	1527	37.57	42676															
24225	8319	1548	37.15	52046																					

XV (Extra High Velocity Nozzle)

Nozzle Outlet Area: 1.45 ft²

FAN INLET CFM	NOZ-ZLE OV	1" SP			3" SP			5" SP			7" SP			9" SP			11" SP			13" SP			15" SP		
		RPM	BHP	OUT FLOW	RPM	BHP	OUT FLOW	RPM	BHP	OUT FLOW	RPM	BHP	OUT FLOW	RPM	BHP	OUT FLOW	RPM	BHP	OUT FLOW	RPM	BHP	OUT FLOW	RPM	BHP	OUT FLOW
3600	2481	469	1.38	11112																					
6750	4652	609	3.59	20747	832	7.91	20711	1005	12.84	21371	1153	18.35	21894												
9900	6823	774	8.01	31405	969	13.86	30145	1123	20.21	30199	1256	26.86	30543	1376	33.93	30919	1488	41.52	31473	1592	49.47	31930			
13050	8994	955	15.57	41822	1122	23.12	40482	1264	30.92	39788	1386	39.13	39705	1497	47.62	39841									
16200	11165	1144	27.26	51831	1288	36.56	51125	1416	46.00	50078	1531	55.60	49451												
19350	13336	1339	44.19	61819	1464	55.09	61775	1579	66.43	60714															
22500	15507	1538	67.43	71833																					

XV7 (Extra High Velocity Nozzle)

Nozzle Outlet Area: 1.45 ft²

FAN INLET CFM	NOZ-ZLE OV	1" SP			3" SP			5" SP			7" SP			9" SP			11" SP			13" SP			15" SP		
		RPM	BHP	OUT FLOW	RPM	BHP	OUT FLOW	RPM	BHP	OUT FLOW	RPM	BHP	OUT FLOW	RPM	BHP	OUT FLOW	RPM	BHP	OUT FLOW	RPM	BHP	OUT FLOW	RPM	BHP	OUT FLOW
3225	2223	462	1.08	10218																					
6200	4273	598	2.77	19564	823	6.30	19452	1002	10.50	20123	1154	15.21	20650												
9175	6323	765	6.24	29722	956	10.89	28581	1111	16.09	28597	1246	21.65	28880	1370	27.69	29318	1486	34.23	29828	1593	41.06	30232			
12150	8374	951	12.34	39532	1110	18.26	38663	1250	24.49	37946	1372	31.16	37795	1484	38.22	37902	1588	45.54	38133						
15125	10424	1146	21.93	49097	1280	29.05	48897	1403	36.58	48022	1516	44.26	47361												
18100	12474	1347	35.92	58674	1461	44.13	58910	1569	52.92	58190															
21075	14524	1550	55.02	68198																					

XV5 (Extra High Velocity Nozzle)

Nozzle Outlet Area: 1.45 ft²

FAN INLET CFM	NOZ-ZLE OV	1" SP			3" SP			5" SP			7" SP			9" SP			11" SP			13" SP			15" SP		
		RPM	BHP	OUT FLOW	RPM	BHP	OUT FLOW	RPM	BHP	OUT FLOW	RPM	BHP	OUT FLOW	RPM	BHP	OUT FLOW	RPM	BHP	OUT FLOW	RPM	BHP	OUT FLOW	RPM	BHP	OUT FLOW
2450	1688	440	0.78	7446																					
5075	3498	581	2.10	15404	801	4.93	15241	968	8.16	15609	1110	11.77	15980												
7700	5307	751	4.85	24208	943	8.75	23157	1093	12.98	23042	1221	17.44	23133	1336	22.15	23346	1442	27.14	23566	1542	32.47	23885			
10325	7116	937	9.66	32652	1101	14.78	31808	1240	20.05	31149	1359	25.55	30905	1466	31.33	30891	1565	37.30	30975						
12950	8925	1133	17.30	40916	1274	23.60	40620	1398	30.10	39831	1510	36.67	39242												
15575	10734	1334	28.45	49129	1456	35.85	49195	1568	43.64	48606															
18200	12543	1539	43.89	57361																					

Class II = Light Blue section

Class III = Dark Blue section

Underlined figures indicate maximum static efficiency.

NOTES:

1. Performance certified is for installation Type A: Free inlet, free outlet.
2. Power rating (BHP) does not include transmission losses.
3. Performance ratings do not include the effects of appurtenances (accessories).
4. Performance ratings do not include the effects of crosswinds.

445 BAIFE

Impeller Type: Airfoil **Max Class I RPM = 878** **Max Class III RPM = 1444** **Windband Outlet Area: 23.70 ft²**
Impeller Dia.: 44.50" **Max Class II RPM = 1138** **Tip Speed FPM = 11.65 x RPM**

LV (Low Velocity Nozzle)

Nozzle Outlet Area: 7.11 ft²

FAN INLET CFM	NOZ-ZLE OV	1" SP			3" SP			5" SP			7" SP			9" SP			11" SP			13" SP			15" SP		
		RPM	BHP	OUT FLOW	RPM	BHP	OUT FLOW	RPM	BHP	OUT FLOW	RPM	BHP	OUT FLOW	RPM	BHP	OUT FLOW	RPM	BHP	OUT FLOW	RPM	BHP	OUT FLOW	RPM	BHP	OUT FLOW
7300	1027	374	1.57	12678																					
15900	2237	494	4.25	26554	671	10.00	25940	834	17.21	27717	978	25.54	30047	1102	34.42	31449									
24500	3447	655	9.84	41030	800	18.10	40733	916	26.63	39894	1027	35.97	39906	1135	46.25	40758	1240	57.64	41939	1342	70.07	43859	1436	82.86	45397
33100	4657	833	19.75	55620	962	31.12	55660	1059	41.95	55113	1148	53.24	54566	1232	64.86	53893	1315	77.26	53700	1396	90.08	53886			
41700	5867	1022	35.71	70349	1120	49.21	69811	1222	63.81	70048	1301	77.58	69701	1372	91.31	69205	1442	105.56	68718						
50300	7078	1215	59.17	85034	1294	74.95	84384	1380	92.08	84328															
58900	8288	1411	91.81	99749																					

LV7 (Low Velocity Nozzle)

Nozzle Outlet Area: 7.11 ft²

FAN INLET CFM	NOZ-ZLE OV	1" SP			3" SP			5" SP			7" SP			9" SP			11" SP			13" SP			15" SP		
		RPM	BHP	OUT FLOW	RPM	BHP	OUT FLOW	RPM	BHP	OUT FLOW	RPM	BHP	OUT FLOW	RPM	BHP	OUT FLOW	RPM	BHP	OUT FLOW	RPM	BHP	OUT FLOW	RPM	BHP	OUT FLOW
4875	686	388	1.27	10582																					
11350	1597	481	2.56	18559	670	7.12	17997	860	14.04	22331	1043	23.39	30252	1177	32.10	33593									
17825	2508	637	5.70	28998	789	11.46	29002	910	18.01	28637	1028	25.80	28223	1148	35.08	28523	1269	46.01	31478	1394	59.16	37343			
24300	3419	823	11.82	39765	938	18.68	39592	1049	26.74	39618	1139	34.99	39343	1227	44.12	39011	1314	54.20	38701	1401	65.31	38473			
30775	4330	1017	21.78	50471	1101	29.46	50086	1197	38.87	50139	1289	49.18	50263	1365	59.38	50119	1435	69.90	49883						
37250	5241	1216	36.71	61216	1284	45.54	60846	1355	55.39	60591	1436	67.00	60699												
43725	6152	1417	57.57	71942																					

LV5 (Low Velocity Nozzle)

Nozzle Outlet Area: 7.11 ft²

FAN INLET CFM	NOZ-ZLE OV	1" SP			3" SP			5" SP			7" SP			9" SP			11" SP			13" SP			15" SP		
		RPM	BHP	OUT FLOW	RPM	BHP	OUT FLOW	RPM	BHP	OUT FLOW	RPM	BHP	OUT FLOW	RPM	BHP	OUT FLOW	RPM	BHP	OUT FLOW	RPM	BHP	OUT FLOW	RPM	BHP	OUT FLOW
3450	485	391	1.00	7048																					
8625	1214	485	1.98	13908	683	5.76	12933	865	11.18	13876	1039	18.46	19237	1178	25.90	21798	1295	33.35	23121						
13800	1942	638	4.26	22709	806	9.19	22086	934	14.73	21442	1053	21.16	20834	1170	28.67	20712	1284	37.19	20993	1395	46.80	22489			
18975	2670	820	8.64	31663	957	14.75	31024	1075	21.58	30546	1171	28.63	30026	1264	36.45	29594	1352	44.83	29113	1438	53.92	28703			
24150	3398	1012	15.79	40541	1114	22.63	39799	1225	30.97	39425	1323	39.77	39120	1404	48.49	38729									
29325	4126	1210	26.55	49435	1293	34.39	48745	1378	43.20	48193															
34500	4854	1410	41.57	58278																					

MV (Medium Velocity Nozzle)

Nozzle Outlet Area: 5.33 ft²

FAN INLET CFM	NOZ-ZLE OV	1" SP			3" SP			5" SP			7" SP			9" SP			11" SP			13" SP			15" SP		
		RPM	BHP	OUT FLOW	RPM	BHP	OUT FLOW	RPM	BHP	OUT FLOW	RPM	BHP	OUT FLOW	RPM	BHP	OUT FLOW	RPM	BHP	OUT FLOW	RPM	BHP	OUT FLOW	RPM	BHP	OUT FLOW
9550	1791	401	2.13	17536																					
16950	3178	540	5.61	31075	700	11.44	31036	857	19.01	33226															
24350	4566	704	12.55	46416	829	20.12	43861	942	28.61	44237	1050	37.88	44989	1161	48.75	46633	1266	60.36	48171						
31750	5953	870	23.61	60963	990	34.69	59085	1077	44.15	57245	1165	55.04	57393	1248	66.11	57702	1331	78.13	58290	1416	91.43	59252			
39150	7341	1044	40.50	75477	1154	55.21	74425	1235	67.23	72134	1306	78.88	70639	1378	91.98	70606									
46550	8729	1223	64.73	90042	1315	81.79	88966	1403	99.06	88058															
53950	10116	1404	97.50	104553																					

MV7 (Medium Velocity Nozzle)

Nozzle Outlet Area: 5.33 ft²

FAN INLET CFM	NOZ-ZLE OV	1" SP			3" SP			5" SP			7" SP			9" SP			11" SP			13" SP			15" SP		
		RPM	BHP	OUT FLOW	RPM	BHP	OUT FLOW	RPM	BHP	OUT FLOW	RPM	BHP	OUT FLOW	RPM	BHP	OUT FLOW	RPM	BHP	OUT FLOW	RPM	BHP	OUT FLOW	RPM	BHP	OUT FLOW
8100	1519	414	1.68	14698																					
13725	2574	554	3.94	24902	712	8.50	25024	865	14.57	26831															
19350	3628	719	8.40	36913	841	14.05	34774	951	20.39	34937	1060	27.77	35785	1169	36.38	37190	1278	46.27	38715						
24975	4683	882	15.15	48156	995	22.76	45735	1085	30.16	44841	1172	38.25	44911	1256	46.87	45270	1341	56.47	45964	1425	66.86	46895			
30600	5738	1052	25.24	59365	1162	35.74	57999	1237	43.89	55554	1311	53.04	54965	1383	62.78	54915									
36225	6793	1227	39.52	70613	1323	51.99	69395	1404	63.46	67906															
41850	7847	1404	58.65	81815																					

MV5 (Medium Velocity Nozzle)

Nozzle Outlet Area: 5.33 ft²

FAN INLET CFM	NOZ-ZLE OV	1" SP			3" SP			5" SP			7" SP			9" SP			11" SP			13" SP			15" SP		
		RPM	BHP	OUT FLOW	RPM	BHP	OUT FLOW	RPM	BHP	OUT FLOW	RPM	BHP	OUT FLOW	RPM	BHP	OUT FLOW	RPM	BHP	OUT FLOW	RPM	BHP	OUT FLOW	RPM	BHP	OUT FLOW
6125	1149	418	1.31	10663																					
10650	1997	556	2.96	18239	724	6.82	18469	877	11.88	19670															
15175	2845	721	6.23	27331	855	11.05	25885	971	16.46	26064	1082	22.72	26676	1189	29.83	27540	1296	38.06	28543						
19700	3694	882	11.07	35861	1008	17.52	34053	1107	23.96	33588	1199	30.88	33685	1285	38.18	33916	1371	46.30	34389						
24225	4542	1049	18.22	44319	1175	27.21	43334	1259	34.31	41639	1339	42.18	41285	1416	50.58	41310									
28750	5391	1222	28.35	52837	1336	39.25	52030	1425	48.94	50866															
33275	6239	1397	41.88	61305																					

Class II = Light Blue section Class III = Dark Blue section Underlined figures indicate maximum static efficiency.

NOTES:
1. Performance certified is for installation Type A: Free inlet, free outlet.
2. Power rating (BHP) does not include transmission losses.
3. Performance ratings do not include the effects of appurtenances (accessories).
4. Performance ratings do not include the effects of crosswinds.

HV (High Velocity Nozzle)

Nozzle Outlet Area: 3.56 ft²

FAN INLET CFM	NOZ-ZLE OV	1" SP			3" SP			5" SP			7" SP			9" SP			11" SP			13" SP			15" SP		
		RPM	BHP	OUT FLOW	RPM	BHP	OUT FLOW	RPM	BHP	OUT FLOW	RPM	BHP	OUT FLOW	RPM	BHP	OUT FLOW	RPM	BHP	OUT FLOW	RPM	BHP	OUT FLOW	RPM	BHP	OUT FLOW
6425	1805	394	1.69	14425																					
12800	3597	503	4.36	27339	702	10.07	29610	867	17.01	28508	1007	24.54	28484												
19175	5388	667	10.37	41520	804	17.35	41516	941	25.63	43554	1067	35.10	44131	1181	45.33	43037	1288	56.05	42875	1386	66.92	42471			
25550	7179	846	21.23	56158	953	30.03	54518	1055	39.46	55105	1157	49.84	56545	1260	61.37	58117	1356	73.63	58861						
31925	8970	1031	38.46	70754	1121	49.19	69021	1204	60.43	68072	1286	72.20	68474	1367	84.48	69583									
38300	10761	1219	63.58	85275	1296	76.21	83573	1368	89.27	82345	1437	102.84	81635												
44675	12553	1410	98.40	99832																					

HV7 (High Velocity Nozzle)

Nozzle Outlet Area: 3.56 ft²

FAN INLET CFM	NOZ-ZLE OV	1" SP			3" SP			5" SP			7" SP			9" SP			11" SP			13" SP			15" SP		
		RPM	BHP	OUT FLOW	RPM	BHP	OUT FLOW	RPM	BHP	OUT FLOW	RPM	BHP	OUT FLOW	RPM	BHP	OUT FLOW	RPM	BHP	OUT FLOW	RPM	BHP	OUT FLOW	RPM	BHP	OUT FLOW
5500	1545	397	1.32	12305																					
10650	2992	510	3.10	22896	705	7.59	24391	866	13.15	23522	1004	19.44	23726												
15800	4439	674	7.05	34449	810	12.33	34496	946	18.80	36079	1070	26.38	36088	1182	34.53	35350	1285	42.95	34990	1381	51.85	34868			
20950	5886	851	14.01	46374	958	20.56	44920	1060	27.69	45572	1163	35.78	46771	1265	44.84	47964	1359	54.59	48111						
26100	7334	1035	25.01	58349	1124	32.81	56652	1208	41.27	55942	1290	50.09	56456	1371	59.48	57331									
31250	8781	1222	40.96	70269	1299	50.15	68654	1371	59.82	67517	1440	69.89	66951												
36400	10228	1412	62.99	82217																					

HV5 (High Velocity Nozzle)

Nozzle Outlet Area: 3.56 ft²

FAN INLET CFM	NOZ-ZLE OV	1" SP			3" SP			5" SP			7" SP			9" SP			11" SP			13" SP			15" SP		
		RPM	BHP	OUT FLOW	RPM	BHP	OUT FLOW	RPM	BHP	OUT FLOW	RPM	BHP	OUT FLOW	RPM	BHP	OUT FLOW	RPM	BHP	OUT FLOW	RPM	BHP	OUT FLOW	RPM	BHP	OUT FLOW
4125	1159	394	1.02	8779																					
8375	2353	507	2.31	17168	708	6.04	18376	866	10.62	17717	1001	15.76	17725												
12625	3547	669	5.17	26165	816	9.63	26275	955	15.06	27477	1077	21.24	27551	1188	28.08	27069	1288	35.06	26740	1382	42.45	26640			
16875	4742	845	10.21	35569	964	15.81	34486	1072	21.85	34981	1177	28.64	35822	1279	36.17	36690	1373	44.26	37019						
21125	5936	1027	18.12	44950	1129	24.92	43683	1220	32.10	43146	1307	39.63	43539	1391	47.62	44189									
25375	7130	1213	29.66	54324	1302	37.68	53072	1382	46.00	52211															
29625	8324	1401	45.49	63660																					

XV (Extra High Velocity Nozzle)

Nozzle Outlet Area: 1.77 ft²

FAN INLET CFM	NOZ-ZLE OV	1" SP			3" SP			5" SP			7" SP			9" SP			11" SP			13" SP			15" SP		
		RPM	BHP	OUT FLOW	RPM	BHP	OUT FLOW	RPM	BHP	OUT FLOW	RPM	BHP	OUT FLOW	RPM	BHP	OUT FLOW	RPM	BHP	OUT FLOW	RPM	BHP	OUT FLOW	RPM	BHP	OUT FLOW
4400	2480	424	1.69	13561																					
8250	4651	551	4.39	25375	753	9.68	25361	909	15.69	26120	1043	22.43	26779												
12100	6821	700	9.78	38380	876	16.91	36807	1016	24.72	36936	1136	32.83	37329	1245	41.52	37838	1346	50.76	38484	1440	60.47	39035			
15950	8991	863	18.97	51063	1015	28.27	49496	1143	37.76	48609	1254	47.87	48566	1354	58.20	48695									
19800	11161	1035	33.35	63373	1165	44.69	62492	1281	56.26	61233	1385	67.99	60466												
23650	13331	1211	54.00	75556	1324	67.31	75495	1428	81.17	74194															
27500	15502	1391	82.40	87796																					

XV7 (Extra High Velocity Nozzle)

Nozzle Outlet Area: 1.77 ft²

FAN INLET CFM	NOZ-ZLE OV	1" SP			3" SP			5" SP			7" SP			9" SP			11" SP			13" SP			15" SP		
		RPM	BHP	OUT FLOW	RPM	BHP	OUT FLOW	RPM	BHP	OUT FLOW	RPM	BHP	OUT FLOW	RPM	BHP	OUT FLOW	RPM	BHP	OUT FLOW	RPM	BHP	OUT FLOW	RPM	BHP	OUT FLOW
3925	2213	418	1.32	12503																					
7550	4256	539	3.35	23745	744	7.68	23736	906	12.81	24558	1044	18.58	25270												
11175	6299	690	7.56	36181	864	13.27	34875	1004	19.60	34869	1126	26.36	35198	1238	33.72	35701	1343	41.69	36321	1440	50.04	36835			
14800	8343	858	14.97	48174	1002	22.17	47091	1128	29.71	46149	1239	37.87	46019	1341	46.54	46206	1435	55.45	46479						
18425	10386	1034	26.60	59846	1155	35.24	59552	1266	44.36	58439	1369	53.79	57693												
22050	12430	1214	43.43	71441	1318	53.50	71760	1416	64.22	70872															
25675	14473	1397	66.54	83047																					

XV5 (Extra High Velocity Nozzle)

Nozzle Outlet Area: 1.77 ft²

FAN INLET CFM	NOZ-ZLE OV	1" SP			3" SP			5" SP			7" SP			9" SP			11" SP			13" SP			15" SP		
		RPM	BHP	OUT FLOW	RPM	BHP	OUT FLOW	RPM	BHP	OUT FLOW	RPM	BHP	OUT FLOW	RPM	BHP	OUT FLOW	RPM	BHP	OUT FLOW	RPM	BHP	OUT FLOW	RPM	BHP	OUT FLOW
3000	1691	398	0.96	9103																					
6225	3509	527	2.60	18940	725	6.04	18668	876	10.00	19119	1005	14.44	19634												
9450	5327	681	5.98	29704	855	10.78	28460	990	15.95	28271	1106	21.43	28402	1210	27.21	28669	1305	33.27	28869	1395	39.75	29220			
12675	7145	850	11.91	40057	999	18.25	39103	1124	24.69	38257	1232	31.47	37983	1328	38.50	37912	1417	45.77	37975						
15900	8963	1029	21.41	50248	1156	29.14	49896	1268	37.13	48939	1369	45.18	48209												
19125	10781	1212	35.25	60347	1322	44.35	60442	1422	53.80	59670															
22350	12599	1398	54.34	70437																					

Class II = Light Blue section

Class III = Dark Blue section

Underlined figures indicate maximum static efficiency.

NOTES:

1. Performance certified is for installation Type A: Free inlet, free outlet.
2. Power rating (BHP) does not include transmission losses.
3. Performance ratings do not include the effects of appurtenances (accessories).
4. Performance ratings do not include the effects of crosswinds.

490 BAIFE

Impeller Type: Airfoil **Max Class I RPM = 797** **Max Class III RPM = 1311** **Windband Outlet Area: 28.74 ft²**
Impeller Dia.: 49.00" **Max Class II RPM = 1033** **Tip Speed FPM = 12.83 x RPM**

LV (Low Velocity Nozzle)

Nozzle Outlet Area: 8.62 ft²

FAN INLET CFM	NOZ-ZLE OV	1" SP			3" SP			5" SP			7" SP			9" SP			11" SP			13" SP			15" SP		
		RPM	BHP	OUT FLOW	RPM	BHP	OUT FLOW	RPM	BHP	OUT FLOW	RPM	BHP	OUT FLOW	RPM	BHP	OUT FLOW	RPM	BHP	OUT FLOW	RPM	BHP	OUT FLOW	RPM	BHP	OUT FLOW
8875	1030	339	1.90	15135																					
19300	2240	449	5.16	32241	609	12.11	31380	758	20.92	33832	889	31.07	36795	1001	41.79	38245									
29725	3450	595	11.94	49765	726	21.90	49319	832	32.30	48390	933	43.67	48444	1031	56.13	49472	1126	69.88	50805	1219	85.04	53277	1305	100.69	55403
40150	4659	757	23.99	67491	874	37.78	67527	962	50.90	66855	1042	64.45	66077	1119	78.67	65367	1194	93.63	65069	1268	109.28	65373			
50575	5869	929	43.42	85384	1018	59.82	84743	1110	77.42	84958	1182	94.17	84570	1246	110.71	83910	1310	128.11	83382						
61000	7079	1104	71.86	103160	1175	90.84	102296	1254	111.84	102332															
71425	8289	1282	111.47	121000																					

LV7 (Low Velocity Nozzle)

Nozzle Outlet Area: 8.62 ft²

FAN INLET CFM	NOZ-ZLE OV	1" SP			3" SP			5" SP			7" SP			9" SP			11" SP			13" SP			15" SP		
		RPM	BHP	OUT FLOW	RPM	BHP	OUT FLOW	RPM	BHP	OUT FLOW	RPM	BHP	OUT FLOW	RPM	BHP	OUT FLOW	RPM	BHP	OUT FLOW	RPM	BHP	OUT FLOW	RPM	BHP	OUT FLOW
5900	685	352	1.53	12752																					
13750	1596	436	3.09	22424	608	8.61	21715	781	17.01	27070	947	28.33	36646	1069	38.92	40746									
21600	2507	579	6.93	35199	717	13.93	35209	826	21.80	34667	933	31.22	34098	1043	42.58	34768	1152	55.71	35197	1266	71.72	45282			
29450	3418	747	14.30	48182	852	22.66	48018	953	32.45	48068	1034	42.38	47661	1115	53.59	47388	1193	65.66	46874	1272	79.12	46578			
37300	4329	924	26.44	61223	1000	35.73	60736	1087	47.12	60785	1171	59.70	60978	1239	71.89	60706	1303	84.72	60460						
45150	5240	1104	44.47	74200	1166	55.21	73767	1230	67.07	73417	1304	81.22	73584												
53000	6151	1286	69.66	87166																					

LV5 (Low Velocity Nozzle)

Nozzle Outlet Area: 8.62 ft²

FAN INLET CFM	NOZ-ZLE OV	1" SP			3" SP			5" SP			7" SP			9" SP			11" SP			13" SP			15" SP		
		RPM	BHP	OUT FLOW	RPM	BHP	OUT FLOW	RPM	BHP	OUT FLOW	RPM	BHP	OUT FLOW	RPM	BHP	OUT FLOW	RPM	BHP	OUT FLOW	RPM	BHP	OUT FLOW	RPM	BHP	OUT FLOW
4175	485	355	1.21	8528																					
10450	1213	440	2.39	16828	621	7.01	15793	786	13.58	17080	944	22.41	23393	1070	31.41	26460	1176	40.41	28020						
16725	1941	580	5.18	27575	732	11.14	26780	848	17.85	25974	957	25.72	25358	1063	34.80	25201	1166	45.08	25416	1267	56.76	27334			
23000	2669	744	10.44	38346	869	17.87	37607	977	26.22	37092	1064	34.76	36452	1148	44.20	35889	1228	54.37	35317	1306	65.38	34810			
29275	3397	919	19.15	49151	1011	27.38	48208	1113	37.60	47842	1202	48.28	47471	1275	58.78	46952									
35550	4126	1099	32.20	59946	1174	41.67	59086	1251	52.32	58400															
41825	4854	1280	50.34	70631																					

MV (Medium Velocity Nozzle)

Nozzle Outlet Area: 6.47 ft²

FAN INLET CFM	NOZ-ZLE OV	1" SP			3" SP			5" SP			7" SP			9" SP			11" SP			13" SP			15" SP		
		RPM	BHP	OUT FLOW	RPM	BHP	OUT FLOW	RPM	BHP	OUT FLOW	RPM	BHP	OUT FLOW	RPM	BHP	OUT FLOW	RPM	BHP	OUT FLOW	RPM	BHP	OUT FLOW	RPM	BHP	OUT FLOW
11575	1790	364	2.58	21234																					
20550	3178	490	6.79	37626	636	13.89	37676	778	23.03	40206															
29525	4566	640	15.26	56358	753	24.41	53197	855	34.62	53569	954	45.99	54625	1054	59.05	56456	1150	73.24	58493						
38500	5954	790	28.61	73905	899	42.05	71628	978	53.52	69397	1058	66.73	69586	1134	80.29	70049	1209	94.79	70714	1286	110.88	71850			
47475	7342	949	49.25	91610	1049	67.13	90358	1122	81.61	87515	1186	95.63	85641	1252	111.67	85677									
56450	8730	1111	78.55	109207	1195	99.36	107960	1274	120.06	106749															
65425	10118	1275	118.20	126761																					

MV7 (Medium Velocity Nozzle)

Nozzle Outlet Area: 6.47 ft²

FAN INLET CFM	NOZ-ZLE OV	1" SP			3" SP			5" SP			7" SP			9" SP			11" SP			13" SP			15" SP		
		RPM	BHP	OUT FLOW	RPM	BHP	OUT FLOW	RPM	BHP	OUT FLOW	RPM	BHP	OUT FLOW	RPM	BHP	OUT FLOW	RPM	BHP	OUT FLOW	RPM	BHP	OUT FLOW	RPM	BHP	OUT FLOW
9800	1516	376	2.03	17824																					
16625	2571	503	4.78	30181	646	10.28	30270	785	17.62	32398															
23450	3627	653	10.19	44759	763	16.98	42091	864	24.75	42396	963	33.71	43432	1061	44.03	44986	1160	56.01	46690						
30275	4682	801	18.37	58388	904	27.63	55488	985	36.53	54336	1064	46.33	54417	1140	56.73	54817	1218	68.50	55749	1294	81.04	56842			
37100	5738	956	30.66	72032	1055	43.30	70295	1124	53.30	67415	1191	64.38	66681	1256	76.12	66585									
43925	6793	1114	47.87	85589	1202	63.11	84186	1275	76.94	82328															
50750	7849	1275	71.10	99193																					

MV5 (Medium Velocity Nozzle)

Nozzle Outlet Area: 6.47 ft²

FAN INLET CFM	NOZ-ZLE OV	1" SP			3" SP			5" SP			7" SP			9" SP			11" SP			13" SP			15" SP		
		RPM	BHP	OUT FLOW	RPM	BHP	OUT FLOW	RPM	BHP	OUT FLOW	RPM	BHP	OUT FLOW	RPM	BHP	OUT FLOW	RPM	BHP	OUT FLOW	RPM	BHP	OUT FLOW	RPM	BHP	OUT FLOW
7425	1148	379	1.58	12877																					
12900	1995	505	3.59	22119	657	8.26	22350	797	14.43	23929															
18375	2842	654	7.53	33081	776	13.37	31351	881	19.91	31538	982	27.49	32289	1080	36.19	33412	1176	46.02	34387						
23850	3689	800	13.38	43411	915	21.22	41257	1004	28.94	40629	1088	37.36	40777	1166	46.17	41044	1244	55.98	41603						
29325	4535	951	21.98	53626	1066	32.90	52460	1142	41.46	50385	1215	51.03	49984	1285	61.20	50016									
34800	5382	1108	34.21	63948	1212	47.45	62991	1292	59.06	61513															
40275	6229	1267	50.58	74222																					

Class II = Light Blue section Class III = Dark Blue section Underlined figures indicate maximum static efficiency.

NOTES:
1. Performance certified is for installation Type A: Free inlet, free outlet.
2. Power rating (BHP) does not include transmission losses.
3. Performance ratings do not include the effects of appurtenances (accessories).
4. Performance ratings do not include the effects of crosswinds.

HV (High Velocity Nozzle)

Nozzle Outlet Area: 4.32 ft²

FAN INLET CFM	NOZ-ZLE OV	1" SP			3" SP			5" SP			7" SP			9" SP			11" SP			13" SP			15" SP		
		RPM	BHP	OUT FLOW	RPM	BHP	OUT FLOW	RPM	BHP	OUT FLOW	RPM	BHP	OUT FLOW	RPM	BHP	OUT FLOW	RPM	BHP	OUT FLOW	RPM	BHP	OUT FLOW	RPM	BHP	OUT FLOW
7800	1808	358	2.05	17548																					
15525	3598	457	5.29	33170	637	12.18	35760	787	20.60	34418	915	29.81	34694												
23250	5388	606	12.59	50370	730	21.02	50317	854	31.02	52709	969	42.56	53504	1073	55.04	52327	1169	67.83	51708	1259	81.20	51603			
30975	7178	768	25.71	68057	865	36.35	66046	958	47.82	66800	1051	60.47	68595	1144	74.35	70415	1232	89.39	71487						
38700	8969	936	46.58	85754	1017	59.45	83567	1093	73.19	82486	1168	87.56	83034	1241	102.31	84310									
46425	10759	1107	77.08	103388	1177	92.41	101332	1242	108.14	99799	1305	124.68	98976												
54150	12549	1280	119.16	120991																					

HV7 (High Velocity Nozzle)

Nozzle Outlet Area: 4.32 ft²

FAN INLET CFM	NOZ-ZLE OV	1" SP			3" SP			5" SP			7" SP			9" SP			11" SP			13" SP			15" SP		
		RPM	BHP	OUT FLOW	RPM	BHP	OUT FLOW	RPM	BHP	OUT FLOW	RPM	BHP	OUT FLOW	RPM	BHP	OUT FLOW	RPM	BHP	OUT FLOW	RPM	BHP	OUT FLOW	RPM	BHP	OUT FLOW
6675	1547	361	1.61	15026																					
12900	2990	463	3.76	27746	640	9.19	29518	787	15.97	28659	911	23.51	28559												
19125	4432	611	8.51	41667	735	14.91	41766	859	22.78	43728	971	31.91	43583	1073	41.79	42753	1167	52.05	42428	1254	62.81	42230			
25350	5875	772	16.93	56153	869	24.85	54368	962	33.50	55193	1055	43.22	56571	1148	54.23	58038	1234	66.14	58295						
31575	7317	938	30.13	70579	1019	39.58	68524	1095	49.76	67633	1170	60.49	68310	1244	71.92	69399									
37800	8760	1108	49.43	85049	1177	60.40	82998	1243	72.18	81666	1306	84.40	81011												
44025	10203	1279	75.78	99408																					

HV5 (High Velocity Nozzle)

Nozzle Outlet Area: 4.32 ft²

FAN INLET CFM	NOZ-ZLE OV	1" SP			3" SP			5" SP			7" SP			9" SP			11" SP			13" SP			15" SP		
		RPM	BHP	OUT FLOW	RPM	BHP	OUT FLOW	RPM	BHP	OUT FLOW	RPM	BHP	OUT FLOW	RPM	BHP	OUT FLOW	RPM	BHP	OUT FLOW	RPM	BHP	OUT FLOW	RPM	BHP	OUT FLOW
5000	1159	358	1.24	10674																					
10175	2358	461	2.81	20857	643	7.33	22283	787	12.90	21575	909	19.11	21478												
15350	3557	609	6.31	31830	742	11.72	31930	868	18.32	33386	979	25.83	33547	1079	34.07	32836	1171	42.68	32644	1256	51.62	32468			
20525	4757	769	12.45	43239	877	19.26	41929	975	26.61	42523	1070	34.84	43528	1163	44.04	44635	1248	53.82	45027						
25700	5956	935	22.14	54658	1028	30.45	53163	1110	39.12	52467	1189	48.29	52939	1265	57.98	53718									
30875	7155	1105	36.29	66093	1186	46.09	64603	1258	56.15	63522															
36050	8355	1277	55.76	77493																					

XV (Extra High Velocity Nozzle)

Nozzle Outlet Area: 2.15 ft²

FAN INLET CFM	NOZ-ZLE OV	1" SP			3" SP			5" SP			7" SP			9" SP			11" SP			13" SP			15" SP		
		RPM	BHP	OUT FLOW	RPM	BHP	OUT FLOW	RPM	BHP	OUT FLOW	RPM	BHP	OUT FLOW	RPM	BHP	OUT FLOW	RPM	BHP	OUT FLOW	RPM	BHP	OUT FLOW	RPM	BHP	OUT FLOW
5325	2476	385	2.04	16434																					
10000	4649	500	5.31	30718	684	11.75	30770	826	19.06	31743	947	27.18	32427												
14675	6822	636	11.88	46567	796	20.54	44681	922	29.90	44697	1031	39.73	45170	1131	50.39	45925	1222	61.49	46601	1307	73.20	47199			
19350	8996	784	23.03	61937	922	34.30	60039	1038	45.79	58934	1139	58.08	58906	1230	70.64	59086									
24025	11169	941	40.57	76937	1059	54.34	75883	1164	68.34	74322	1258	82.49	73337												
28700	13343	1101	65.69	91720	1203	81.75	91598	1298	98.69	90089															
33375	15516	1264	100.09	106518																					

XV7 (Extra High Velocity Nozzle)

Nozzle Outlet Area: 2.15 ft²

FAN INLET CFM	NOZ-ZLE OV	1" SP			3" SP			5" SP			7" SP			9" SP			11" SP			13" SP			15" SP		
		RPM	BHP	OUT FLOW	RPM	BHP	OUT FLOW	RPM	BHP	OUT FLOW	RPM	BHP	OUT FLOW	RPM	BHP	OUT FLOW	RPM	BHP	OUT FLOW	RPM	BHP	OUT FLOW	RPM	BHP	OUT FLOW
4775	2220	380	1.61	15217																					
9175	4265	490	4.08	28850	676	9.33	28824	823	15.55	29811	948	22.54	30617												
13575	6311	628	9.23	44009	785	16.12	42326	912	23.79	42305	1023	32.02	42733	1125	40.98	43395	1220	50.62	44097	1308	60.74	44707			
17975	8357	780	18.21	58482	911	26.98	57211	1026	36.20	56144	1126	46.03	55893	1218	56.48	56044	1304	67.39	56459						
22375	10402	940	32.35	72646	1050	42.87	72317	1151	53.99	71001	1244	65.35	70037												
26775	12448	1104	52.87	86747	1198	65.05	87107	1287	78.07	86042															
31175	14493	1271	81.11	100886																					

XV5 (Extra High Velocity Nozzle)

Nozzle Outlet Area: 2.15 ft²

FAN INLET CFM	NOZ-ZLE OV	1" SP			3" SP			5" SP			7" SP			9" SP			11" SP			13" SP			15" SP		
		RPM	BHP	OUT FLOW	RPM	BHP	OUT FLOW	RPM	BHP	OUT FLOW	RPM	BHP	OUT FLOW	RPM	BHP	OUT FLOW	RPM	BHP	OUT FLOW	RPM	BHP	OUT FLOW	RPM	BHP	OUT FLOW
3625	1685	361	1.15	10985																					
7525	3498	478	3.13	22904	658	7.31	22591	795	12.09	23115	912	17.45	23711												
11425	5311	617	7.19	35887	775	12.99	34360	898	19.26	34168	1004	25.93	34392	1098	32.89	34663	1185	40.29	34984	1267	48.18	35442			
15325	7125	771	14.39	48495	905	21.95	47198	1019	29.77	46207	1117	37.95	45870	1205	46.53	45862	1286	55.35	45954						
19225	8938	932	25.75	60738	1047	35.03	60245	1149	44.70	59092	1241	54.45	58223												
23125	10751	1098	42.42	72972	1198	53.41	73073	1289	64.84	72128															
27025	12564	1266	65.32	85143																					

Class II = Light Blue section

Class III = Dark Blue section

Underlined figures indicate maximum static efficiency.

NOTES:

1. Performance certified is for installation Type A: Free inlet, free outlet.
2. Power rating (BHP) does not include transmission losses.
3. Performance ratings do not include the effects of appurtenances (accessories).
4. Performance ratings do not include the effects of crosswinds.

542 BAIFE

Impeller Type: Airfoil **Max Class I RPM = 720** **Max Class III RPM = 1184** **Windband Outlet Area: 35.23 ft²**
Impeller Dia.: 54.25" **Max Class II RPM = 933** **Tip Speed FPM = 14.20 x RPM**

LV (Low Velocity Nozzle)

Nozzle Outlet Area: 10.56 ft²

FAN INLET CFM	NOZ-ZLE OV	1" SP			3" SP			5" SP			7" SP			9" SP			11" SP			13" SP			15" SP		
		RPM	BHP	OUT FLOW	RPM	BHP	OUT FLOW	RPM	BHP	OUT FLOW	RPM	BHP	OUT FLOW	RPM	BHP	OUT FLOW	RPM	BHP	OUT FLOW	RPM	BHP	OUT FLOW	RPM	BHP	OUT FLOW
10875	1030	307	2.34	18943																					
23650	2239	406	6.35	39596	550	14.84	38449	684	25.57	41134	803	38.08	45122	904	51.19	46782									
36425	3448	537	14.60	60935	656	26.88	60499	751	39.52	59208	842	53.39	59202	931	68.74	60570	1017	85.64	62260	1101	104.21	65288	1178	123.19	67515
49200	4658	684	29.44	82765	789	46.23	82704	869	62.41	81966	941	78.96	80963	1011	96.51	80188	1078	114.61	79654	1146	134.19	80312			
61975	5867	839	53.20	104647	919	73.20	103799	1003	95.01	104208	1067	115.24	103561	1125	135.56	102778	1183	156.94	102162						
74750	7077	997	88.04	126428	1061	111.26	125348	1132	136.86	125331															
87525	8286	1157	136.31	148191																					

LV7 (Low Velocity Nozzle)

Nozzle Outlet Area: 10.56 ft²

FAN INLET CFM	NOZ-ZLE OV	1" SP			3" SP			5" SP			7" SP			9" SP			11" SP			13" SP			15" SP		
		RPM	BHP	OUT FLOW	RPM	BHP	OUT FLOW	RPM	BHP	OUT FLOW	RPM	BHP	OUT FLOW	RPM	BHP	OUT FLOW	RPM	BHP	OUT FLOW	RPM	BHP	OUT FLOW	RPM	BHP	OUT FLOW
7250	686	318	1.88	15650																					
16850	1595	394	3.79	27512	549	10.54	26567	706	20.90	33390	856	34.80	45062	966	47.77	50051									
26450	2504	522	8.45	43040	647	17.02	43078	746	26.71	42482	843	38.30	41878	942	52.17	42581	1041	68.36	46825	1144	88.00	55662			
36050	3413	674	17.48	58987	769	27.72	58789	860	39.68	58820	934	51.97	58431	1006	65.48	57897	1078	80.58	57552	1149	96.99	57121			
45650	4322	833	32.23	74889	902	43.63	74314	981	57.62	74406	1057	73.04	74659	1118	87.88	74268	1176	103.62	73983						
55250	5231	996	54.32	90838	1051	67.28	90197	1110	82.01	89883	1176	99.11	89970												
64850	6139	1160	85.05	106696																					

LV5 (Low Velocity Nozzle)

Nozzle Outlet Area: 10.56 ft²

FAN INLET CFM	NOZ-ZLE OV	1" SP			3" SP			5" SP			7" SP			9" SP			11" SP			13" SP			15" SP		
		RPM	BHP	OUT FLOW	RPM	BHP	OUT FLOW	RPM	BHP	OUT FLOW	RPM	BHP	OUT FLOW	RPM	BHP	OUT FLOW	RPM	BHP	OUT FLOW	RPM	BHP	OUT FLOW	RPM	BHP	OUT FLOW
5125	485	321	1.49	10542																					
12800	1212	398	2.94	20688	560	8.55	19168	710	16.64	20978	853	27.50	28754	966	38.44	32332	1062	49.50	34295						
20475	1938	523	6.32	33718	661	13.65	32809	766	21.88	31848	864	31.48	31011	960	42.63	30857	1053	55.22	31050	1145	69.66	33925			
28150	2665	672	12.80	47004	784	21.84	46000	881	31.99	45312	960	42.48	44561	1036	54.05	43869	1109	66.62	43265	1179	80.01	42555			
35825	3392	829	23.38	60160	912	33.45	58982	1004	45.92	58503	1084	58.93	58010	1150	71.77	57379									
43500	4118	991	39.28	73348	1059	50.89	72304	1129	63.99	71493															
51175	4845	1155	61.53	86487																					

MV (Medium Velocity Nozzle)

Nozzle Outlet Area: 7.93 ft²

FAN INLET CFM	NOZ-ZLE OV	1" SP			3" SP			5" SP			7" SP			9" SP			11" SP			13" SP			15" SP		
		RPM	BHP	OUT FLOW	RPM	BHP	OUT FLOW	RPM	BHP	OUT FLOW	RPM	BHP	OUT FLOW	RPM	BHP	OUT FLOW	RPM	BHP	OUT FLOW	RPM	BHP	OUT FLOW	RPM	BHP	OUT FLOW
14200	1792	329	3.18	26078																					
25200	3179	443	8.34	46193	574	16.98	46085	703	28.26	49389															
36200	4567	578	18.70	69071	680	29.91	65185	772	42.40	65614	862	56.44	67034	952	72.38	69202	1039	89.86	71823						
47200	5955	714	35.14	90660	812	51.54	87799	884	65.74	85171	956	81.90	85365	1024	98.35	85814	1092	116.19	86679	1162	136.08	88188			
58200	7343	857	60.33	112268	947	82.15	110678	1014	100.20	107374	1072	117.47	105104	1131	136.95	105047									
69200	8731	1003	96.14	133792	1079	121.67	132276	1151	147.28	130899															
80200	10119	1152	145.03	155435																					

MV7 (Medium Velocity Nozzle)

Nozzle Outlet Area: 7.93 ft²

FAN INLET CFM	NOZ-ZLE OV	1" SP			3" SP			5" SP			7" SP			9" SP			11" SP			13" SP			15" SP		
		RPM	BHP	OUT FLOW	RPM	BHP	OUT FLOW	RPM	BHP	OUT FLOW	RPM	BHP	OUT FLOW	RPM	BHP	OUT FLOW	RPM	BHP	OUT FLOW	RPM	BHP	OUT FLOW	RPM	BHP	OUT FLOW
12025	1517	340	2.50	21907																					
20375	2571	454	5.84	36952	584	12.63	37185	709	21.59	39702															
28725	3624	590	12.50	54889	689	20.80	51572	780	30.30	51912	870	41.34	53269	958	53.91	55069	1048	68.69	57375						
37075	4678	723	22.47	71511	816	33.81	67947	889	44.68	66516	961	56.78	66698	1030	69.60	67241	1099	83.69	68153	1169	99.38	69715			
45425	5731	862	37.39	88118	952	52.92	86048	1014	65.11	82473	1075	78.76	81642	1134	93.20	81557									
53775	6785	1005	58.48	104774	1085	77.23	103106	1150	93.92	100699															
62125	7838	1150	86.80	121402																					

MV5 (Medium Velocity Nozzle)

Nozzle Outlet Area: 7.93 ft²

FAN INLET CFM	NOZ-ZLE OV	1" SP			3" SP			5" SP			7" SP			9" SP			11" SP			13" SP			15" SP		
		RPM	BHP	OUT FLOW	RPM	BHP	OUT FLOW	RPM	BHP	OUT FLOW	RPM	BHP	OUT FLOW	RPM	BHP	OUT FLOW	RPM	BHP	OUT FLOW	RPM	BHP	OUT FLOW	RPM	BHP	OUT FLOW
9125	1151	343	1.95	15862																					
15825	1997	456	4.40	27100	594	10.15	27462	720	17.70	29356															
22525	2842	591	9.24	40578	701	16.39	38438	796	24.42	38685	887	33.70	39583	975	44.29	40883	1063	56.54	42397						
29225	3687	722	16.36	53157	826	25.97	50526	907	35.49	49817	982	45.69	49911	1053	56.57	50291	1124	68.69	51040						
35925	4533	859	26.94	65736	963	40.35	64320	1031	50.76	61714	1097	62.48	61228	1160	74.90	61243									
42625	5378	1000	41.84	78317	1094	58.06	77144	1166	72.22	75304															
49325	6223	1143	61.77	90857																					

Class II = Light Blue section Class III = Dark Blue section Underlined figures indicate maximum static efficiency.

NOTES:
1. Performance certified is for installation Type A: Free inlet, free outlet.
2. Power rating (BHP) does not include transmission losses.
3. Performance ratings do not include the effects of appurtenances (accessories).
4. Performance ratings do not include the effects of crosswinds.

HV (High Velocity Nozzle)

Nozzle Outlet Area: 5.29 ft²

FAN INLET CFM	NOZ-ZLE OV	1" SP			3" SP			5" SP			7" SP			9" SP			11" SP			13" SP			15" SP		
		RPM	BHP	OUT FLOW	RPM	BHP	OUT FLOW	RPM	BHP	OUT FLOW	RPM	BHP	OUT FLOW	RPM	BHP	OUT FLOW	RPM	BHP	OUT FLOW	RPM	BHP	OUT FLOW	RPM	BHP	OUT FLOW
9550	1806	323	2.50	21357																					
19025	3597	412	6.45	40538	575	14.90	43703	711	25.26	42274	826	36.47	42325												
28500	5389	547	15.40	61688	660	25.84	61782	772	38.11	64758	875	52.13	65495	969	67.43	64071	1056	83.18	63450	1137	99.49	63170			
37975	7180	694	31.55	83469	782	44.68	81070	866	58.77	81994	949	74.06	84027	1033	91.06	86245	1113	109.64	87696						
47450	8971	846	57.21	105196	919	72.97	102498	988	89.92	101232	1055	107.34	101786	1121	125.45	103362									
56925	10763	1000	94.52	126748	1063	113.24	124195	1123	132.98	122516	1179	152.94	121368												
66400	12554	1157	146.40	148427																					

HV7 (High Velocity Nozzle)

Nozzle Outlet Area: 5.29 ft²

FAN INLET CFM	NOZ-ZLE OV	1" SP			3" SP			5" SP			7" SP			9" SP			11" SP			13" SP			15" SP		
		RPM	BHP	OUT FLOW	RPM	BHP	OUT FLOW	RPM	BHP	OUT FLOW	RPM	BHP	OUT FLOW	RPM	BHP	OUT FLOW	RPM	BHP	OUT FLOW	RPM	BHP	OUT FLOW	RPM	BHP	OUT FLOW
8175	1546	326	1.97	18397																					
15825	2992	418	4.60	33985	578	11.26	36163	711	19.59	35187	823	28.83	35063												
23475	4438	552	10.44	51090	664	18.29	51212	776	27.94	53624	877	39.11	53413	969	51.23	52353	1054	63.82	51983	1133	77.10	51892			
31125	5885	698	20.82	68915	786	30.58	66783	869	41.09	67667	954	53.18	69515	1037	66.51	71160	1115	81.19	71568						
38775	7331	849	37.17	86721	922	48.77	84197	990	61.17	83027	1058	74.41	83887	1124	88.26	85122									
46425	8778	1002	60.81	104390	1065	74.43	101968	1124	88.77	100268	1181	103.82	99479												
54075	10224	1157	93.32	122053																					

HV5 (High Velocity Nozzle)

Nozzle Outlet Area: 5.29 ft²

FAN INLET CFM	NOZ-ZLE OV	1" SP			3" SP			5" SP			7" SP			9" SP			11" SP			13" SP			15" SP		
		RPM	BHP	OUT FLOW	RPM	BHP	OUT FLOW	RPM	BHP	OUT FLOW	RPM	BHP	OUT FLOW	RPM	BHP	OUT FLOW	RPM	BHP	OUT FLOW	RPM	BHP	OUT FLOW	RPM	BHP	OUT FLOW
6125	1158	323	1.51	13005																					
12450	2354	416	3.44	25527	581	8.99	27361	711	15.82	26484	821	23.42	26319												
18775	3550	549	7.69	38909	670	14.35	39118	783	22.36	40785	884	31.63	41066	974	41.67	40122	1057	52.19	39855	1134	63.16	39686			
25100	4746	693	15.16	52851	791	23.51	51280	880	32.54	52057	966	42.63	53302	1050	53.89	54649	1127	65.92	55153						
31425	5942	843	26.99	66858	927	37.15	65013	1001	47.74	64151	1073	59.04	64797	1142	70.96	65782									
37750	7137	996	44.21	80828	1069	56.15	78973	1134	68.43	77635															
44075	8333	1150	67.74	94682																					

XV (Extra High Velocity Nozzle)

Nozzle Outlet Area: 2.64 ft²

FAN INLET CFM	NOZ-ZLE OV	1" SP			3" SP			5" SP			7" SP			9" SP			11" SP			13" SP			15" SP		
		RPM	BHP	OUT FLOW	RPM	BHP	OUT FLOW	RPM	BHP	OUT FLOW	RPM	BHP	OUT FLOW	RPM	BHP	OUT FLOW	RPM	BHP	OUT FLOW	RPM	BHP	OUT FLOW	RPM	BHP	OUT FLOW
6550	2484	348	2.51	20193																					
12275	4655	452	6.53	37717	618	14.42	37751	746	23.37	38896	856	33.40	39916												
18000	6826	574	14.53	57012	719	25.19	54774	833	36.69	54826	932	48.84	55508	1021	61.68	56187	1104	75.45	57175	1181	89.85	57968			
23725	8997	709	28.33	76036	833	42.08	73630	938	56.21	72313	1029	71.24	72242	1111	86.60	72431									
29450	11168	850	49.74	94314	956	66.51	92935	1051	83.68	91042	1136	101.05	89851												
35175	13339	994	80.41	112372	1087	100.32	112337	1172	120.85	110368															
40900	15510	1142	122.79	130605																					

XV7 (Extra High Velocity Nozzle)

Nozzle Outlet Area: 2.64 ft²

FAN INLET CFM	NOZ-ZLE OV	1" SP			3" SP			5" SP			7" SP			9" SP			11" SP			13" SP			15" SP		
		RPM	BHP	OUT FLOW	RPM	BHP	OUT FLOW	RPM	BHP	OUT FLOW	RPM	BHP	OUT FLOW	RPM	BHP	OUT FLOW	RPM	BHP	OUT FLOW	RPM	BHP	OUT FLOW	RPM	BHP	OUT FLOW
5850	2218	343	1.96	18607																					
11225	4257	443	5.01	35431	610	11.39	35226	743	19.03	36459	856	27.58	37462												
16600	6295	566	11.24	53774	708	19.66	51714	823	29.07	51727	924	39.22	52381	1015	50.03	52952	1101	61.85	53833	1181	74.32	54696			
21975	8333	703	22.17	71498	821	32.84	69846	925	44.10	68541	1016	56.22	68341	1099	68.97	68501	1176	82.16	68883						
27350	10372	847	39.37	88806	946	52.13	88303	1038	65.83	86779	1122	79.71	85585												
32725	12410	995	64.38	106081	1080	79.25	106505	1160	95.05	105107															
38100	14448	1145	98.64	123320																					

XV5 (Extra High Velocity Nozzle)

Nozzle Outlet Area: 2.64 ft²

FAN INLET CFM	NOZ-ZLE OV	1" SP			3" SP			5" SP			7" SP			9" SP			11" SP			13" SP			15" SP		
		RPM	BHP	OUT FLOW	RPM	BHP	OUT FLOW	RPM	BHP	OUT FLOW	RPM	BHP	OUT FLOW	RPM	BHP	OUT FLOW	RPM	BHP	OUT FLOW	RPM	BHP	OUT FLOW	RPM	BHP	OUT FLOW
4450	1688	327	1.43	13612																					
9225	3498	432	3.85	28111	595	8.99	27786	718	14.82	28323	824	21.42	29111												
14000	5309	557	8.80	43954	700	15.92	42117	811	23.60	41868	906	31.69	42037	991	40.22	42376	1070	49.34	42830	1144	58.99	43378			
18775	7120	696	17.61	59402	818	26.96	57929	920	36.44	56587	1009	46.53	56239	1088	56.97	56162	1161	67.75	56251						
23550	8931	841	31.47	74369	946	42.98	73885	1038	54.82	72459	1121	66.75	71381												
28325	10741	991	51.88	89373	1081	65.28	89452	1164	79.42	88380															
33100	12552	1143	79.97	104318																					

Class II = Light Blue section

Class III = Dark Blue section

Underlined figures indicate maximum static efficiency.

NOTES:

1. Performance certified is for installation Type A: Free inlet, free outlet.
2. Power rating (BHP) does not include transmission losses.
3. Performance ratings do not include the effects of appurtenances (accessories).
4. Performance ratings do not include the effects of crosswinds.

600 BAIFE

Impeller Type: Airfoil **Max Class I RPM = 651** **Max Class III RPM = 1071** **Windband Outlet Area: 43.10 ft²**
Impeller Dia.: 60.00" **Max Class II RPM = 844** **Tip Speed FPM = 15.71 x RPM**

LV (Low Velocity Nozzle)

Nozzle Outlet Area: 12.92 ft²

FAN INLET CFM	NOZ-ZLE OV	1" SP			3" SP			5" SP			7" SP			9" SP			11" SP			13" SP			15" SP		
		RPM	BHP	OUT FLOW	RPM	BHP	OUT FLOW	RPM	BHP	OUT FLOW	RPM	BHP	OUT FLOW	RPM	BHP	OUT FLOW	RPM	BHP	OUT FLOW	RPM	BHP	OUT FLOW	RPM	BHP	OUT FLOW
13300	1029	277	2.85	22795																					
28925	2239	367	7.76	48413	498	18.23	47274	619	31.36	50704	726	46.57	55157	817	62.53	56844									
44550	3448	486	17.91	74635	593	32.85	73971	679	48.33	72416	762	65.48	72652	842	84.15	74185	920	104.91	76457	995	127.28	79495	1065	150.63	82504
60175	4657	618	35.93	101152	713	56.46	101079	786	76.43	100327	851	96.64	99083	914	118.01	98054	975	140.32	97532	1036	164.06	98179			
75800	5866	758	64.92	127893	831	89.57	126983	906	115.88	127273	965	141.07	126734	1017	165.72	125674	1069	191.64	124798						
91425	7076	901	107.53	154564	960	136.38	153463	1023	167.16	153194															
107050	8285	1046	166.68	181248																					

LV7 (Low Velocity Nozzle)

Nozzle Outlet Area: 12.92 ft²

FAN INLET CFM	NOZ-ZLE OV	1" SP			3" SP			5" SP			7" SP			9" SP			11" SP			13" SP			15" SP		
		RPM	BHP	OUT FLOW	RPM	BHP	OUT FLOW	RPM	BHP	OUT FLOW	RPM	BHP	OUT FLOW	RPM	BHP	OUT FLOW	RPM	BHP	OUT FLOW	RPM	BHP	OUT FLOW	RPM	BHP	OUT FLOW
8875	687	287	2.29	18932																					
20625	1596	356	4.63	33611	497	12.94	32751	638	25.53	40678	774	42.59	55130	873	58.36	61088									
32375	2506	472	10.34	52651	585	20.82	52694	675	32.75	52082	762	46.82	51144	852	63.89	52291	941	83.57	52633	1034	107.55	67935			
44125	3415	610	21.44	72236	695	33.86	71860	778	48.61	72022	844	63.46	71378	910	80.20	70916	974	98.36	70201	1039	118.69	69913			
55875	4324	754	39.55	91717	816	53.45	90968	887	70.48	91017	956	89.43	91374	1012	107.85	91048	1063	126.63	90439						
67625	5234	901	66.54	111174	951	82.47	110432	1004	100.42	110004	1064	121.47	110172												
79375	6143	1049	104.08	130535																					

LV5 (Low Velocity Nozzle)

Nozzle Outlet Area: 12.92 ft²

FAN INLET CFM	NOZ-ZLE OV	1" SP			3" SP			5" SP			7" SP			9" SP			11" SP			13" SP			15" SP		
		RPM	BHP	OUT FLOW	RPM	BHP	OUT FLOW	RPM	BHP	OUT FLOW	RPM	BHP	OUT FLOW	RPM	BHP	OUT FLOW	RPM	BHP	OUT FLOW	RPM	BHP	OUT FLOW	RPM	BHP	OUT FLOW
6275	486	290	1.82	12815																					
15675	1213	360	3.60	25326	507	10.49	23637	642	20.37	25696	771	33.62	35095	874	47.13	39724	960	60.53	41869						
25075	1941	473	7.73	41261	598	16.72	40183	693	26.81	39033	781	38.48	37881	868	52.16	37744	952	67.55	37899	1035	85.17	41263			
34475	2668	608	15.69	57542	709	26.72	56288	797	39.19	55488	869	52.14	54666	937	66.17	53713	1003	81.56	52981	1067	98.15	52301			
43875	3396	750	28.65	73639	826	41.11	72326	909	56.39	71741	981	72.26	71086	1041	88.08	70363									
53275	4123	897	48.20	89826	958	62.34	88502	1021	78.30	87478															
62675	4851	1045	75.41	105867																					

MV (Medium Velocity Nozzle)

Nozzle Outlet Area: 9.69 ft²

FAN INLET CFM	NOZ-ZLE OV	1" SP			3" SP			5" SP			7" SP			9" SP			11" SP			13" SP			15" SP		
		RPM	BHP	OUT FLOW	RPM	BHP	OUT FLOW	RPM	BHP	OUT FLOW	RPM	BHP	OUT FLOW	RPM	BHP	OUT FLOW	RPM	BHP	OUT FLOW	RPM	BHP	OUT FLOW	RPM	BHP	OUT FLOW
17375	1792	298	3.91	32060																					
30850	3182	401	10.24	56611	519	20.78	56374	636	34.65	60595															
44325	4572	523	22.93	84575	616	36.80	79998	699	52.09	80508	779	68.95	81870	861	88.65	84745	939	109.83	87603	1016	132.89	91611			
57800	5962	646	43.07	110985	735	63.26	107589	799	80.34	104119	864	100.06	104327	926	120.38	105003	988	142.46	106224	1051	166.69	107998			
71275	7352	776	74.12	137556	857	100.76	135552	917	122.64	131383	970	144.03	128730	1023	167.72	128585									
84750	8742	908	118.04	163878	977	149.48	162107	1042	180.83	160413															
98225	10132	1043	178.11	190405																					

MV7 (Medium Velocity Nozzle)

Nozzle Outlet Area: 9.69 ft²

FAN INLET CFM	NOZ-ZLE OV	1" SP			3" SP			5" SP			7" SP			9" SP			11" SP			13" SP			15" SP		
		RPM	BHP	OUT FLOW	RPM	BHP	OUT FLOW	RPM	BHP	OUT FLOW	RPM	BHP	OUT FLOW	RPM	BHP	OUT FLOW	RPM	BHP	OUT FLOW	RPM	BHP	OUT FLOW	RPM	BHP	OUT FLOW
14700	1516	307	3.04	26710																					
24925	2571	411	7.17	45292	528	15.45	45478	641	26.41	48539															
35150	3626	533	15.25	67062	623	25.45	63089	705	37.02	63451	786	50.46	65018	867	66.13	67608	948	84.14	70485						
45375	4680	654	27.52	87521	738	41.39	83150	804	54.69	81397	869	69.48	81604	931	85.06	82192	994	102.48	83436	1057	121.58	85284			
55600	5735	780	45.84	107885	862	65.01	105472	917	79.68	100914	972	96.34	99869	1026	114.23	99883									
65825	6790	909	71.60	128210	981	94.45	126118	1041	115.28	123395															
76050	7844	1041	106.54	148687																					

MV5 (Medium Velocity Nozzle)

Nozzle Outlet Area: 9.69 ft²

FAN INLET CFM	NOZ-ZLE OV	1" SP			3" SP			5" SP			7" SP			9" SP			11" SP			13" SP			15" SP		
		RPM	BHP	OUT FLOW	RPM	BHP	OUT FLOW	RPM	BHP	OUT FLOW	RPM	BHP	OUT FLOW	RPM	BHP	OUT FLOW	RPM	BHP	OUT FLOW	RPM	BHP	OUT FLOW	RPM	BHP	OUT FLOW
11150	1150	310	2.39	19382																					
19350	1996	413	5.41	33242	537	12.41	33581	651	21.65	35908															
27550	2842	534	11.28	49588	633	19.98	46911	720	29.91	47361	802	41.23	48419	882	54.26	50097	961	69.13	51809						
35750	3687	653	20.03	65047	747	31.79	61826	820	43.40	60928	888	55.91	61067	952	69.18	61504	1016	83.95	62388						
43950	4533	777	33.00	80448	870	49.23	78583	932	62.04	75463	992	76.46	74913	1049	91.66	74937									
52150	5379	904	51.15	95778	989	70.98	94343	1055	88.53	92215															
60350	6225	1034	75.68	111201																					

Class II = Light Blue section Class III = Dark Blue section Underlined figures indicate maximum static efficiency.

NOTES:
1. Performance certified is for installation Type A: Free inlet, free outlet.
2. Power rating (BHP) does not include transmission losses.
3. Performance ratings do not include the effects of appurtenances (accessories).
4. Performance ratings do not include the effects of crosswinds.

HV (High Velocity Nozzle)

Nozzle Outlet Area: 6.47 ft²

FAN INLET CFM	NOZ-ZLE OV	1" SP			3" SP			5" SP			7" SP			9" SP			11" SP			13" SP			15" SP		
		RPM	BHP	OUT FLOW	RPM	BHP	OUT FLOW	RPM	BHP	OUT FLOW	RPM	BHP	OUT FLOW	RPM	BHP	OUT FLOW	RPM	BHP	OUT FLOW	RPM	BHP	OUT FLOW	RPM	BHP	OUT FLOW
11700	1808	292	3.06	26097																					
23300	3601	373	7.92	49688	520	18.24	53510	643	30.94	51809	747	44.67	51869												
34900	5394	495	18.88	75544	597	31.66	75628	698	46.64	79207	792	63.99	80564	876	82.48	78292	955	101.87	77755	1028	121.75	77245			
46500	7187	628	38.69	102200	707	54.64	99153	783	71.90	100295	858	90.60	102769	935	111.79	105810	1006	134.03	107131						
58100	8980	765	70.01	128692	832	89.61	125599	893	109.89	123760	954	131.36	124528	1014	153.68	126532									
69700	10773	905	115.93	155197	962	138.89	152092	1016	162.97	149994	1067	187.61	148672												
81300	12566	1047	179.53	181722																					

HV7 (High Velocity Nozzle)

Nozzle Outlet Area: 6.47 ft²

FAN INLET CFM	NOZ-ZLE OV	1" SP			3" SP			5" SP			7" SP			9" SP			11" SP			13" SP			15" SP		
		RPM	BHP	OUT FLOW	RPM	BHP	OUT FLOW	RPM	BHP	OUT FLOW	RPM	BHP	OUT FLOW	RPM	BHP	OUT FLOW	RPM	BHP	OUT FLOW	RPM	BHP	OUT FLOW	RPM	BHP	OUT FLOW
10000	1546	295	2.42	22608																					
19350	2991	378	5.63	41581	523	13.80	44393	642	23.86	42626	744	35.25	42828												
28700	4436	499	12.76	62477	600	22.33	62577	702	34.23	65687	793	47.85	65356	876	62.62	63980	953	78.05	63591	1024	94.17	63269			
38050	5881	631	25.45	84280	710	37.30	81572	786	50.31	82819	862	64.92	84909	938	81.45	87143	1008	99.26	87491						
47400	7326	767	45.35	105977	833	59.52	102882	895	74.79	101538	956	90.85	102507	1016	107.86	104067									
56750	8771	906	74.39	127695	963	91.06	124739	1016	108.49	122600	1067	126.70	121541												
66100	10216	1046	114.11	149278																					

HV5 (High Velocity Nozzle)

Nozzle Outlet Area: 6.47 ft²

FAN INLET CFM	NOZ-ZLE OV	1" SP			3" SP			5" SP			7" SP			9" SP			11" SP			13" SP			15" SP		
		RPM	BHP	OUT FLOW	RPM	BHP	OUT FLOW	RPM	BHP	OUT FLOW	RPM	BHP	OUT FLOW	RPM	BHP	OUT FLOW	RPM	BHP	OUT FLOW	RPM	BHP	OUT FLOW	RPM	BHP	OUT FLOW
7500	1159	292	1.85	15894																					
15250	2357	377	4.24	31342	525	10.98	33379	643	19.37	32440	742	28.62	32083												
23000	3555	497	9.44	47677	606	17.57	47879	709	27.48	50083	799	38.66	50151	881	51.05	49180	956	63.92	48845	1025	77.22	48436			
30750	4753	628	18.67	64829	716	28.85	62837	796	39.86	63723	874	52.26	65292	950	66.07	66965	1019	80.64	67464						
38500	5951	763	33.11	81880	839	45.57	79638	906	58.57	78599	971	72.41	79373	1033	86.91	80530									
46250	7148	901	54.15	98925	968	68.99	96790	1027	84.11	95193															
54000	8346	1042	83.39	116085																					

XV (Extra High Velocity Nozzle)

Nozzle Outlet Area: 3.22 ft²

FAN INLET CFM	NOZ-ZLE OV	1" SP			3" SP			5" SP			7" SP			9" SP			11" SP			13" SP			15" SP		
		RPM	BHP	OUT FLOW	RPM	BHP	OUT FLOW	RPM	BHP	OUT FLOW	RPM	BHP	OUT FLOW	RPM	BHP	OUT FLOW	RPM	BHP	OUT FLOW	RPM	BHP	OUT FLOW	RPM	BHP	OUT FLOW
8000	2481	315	3.08	24789																					
15025	4659	409	8.01	46208	559	17.67	46231	675	28.65	47715	774	40.87	48838												
22050	6837	520	17.88	69944	651	30.95	67201	754	45.05	67256	843	59.83	67977	924	75.69	68951	999	92.56	70163	1068	110.02	70963			
29075	9016	642	34.82	93179	754	51.67	90249	849	69.01	88652	931	87.36	88506	1005	106.14	88708									
36100	11194	770	61.20	115617	866	81.84	114015	952	102.97	111749	1029	124.34	110323												
43125	13372	901	99.12	137834	984	123.18	137638	1061	148.44	135281															
50150	15550	1034	150.85	159997																					

XV7 (Extra High Velocity Nozzle)

Nozzle Outlet Area: 3.22 ft²

FAN INLET CFM	NOZ-ZLE OV	1" SP			3" SP			5" SP			7" SP			9" SP			11" SP			13" SP			15" SP		
		RPM	BHP	OUT FLOW	RPM	BHP	OUT FLOW	RPM	BHP	OUT FLOW	RPM	BHP	OUT FLOW	RPM	BHP	OUT FLOW	RPM	BHP	OUT FLOW	RPM	BHP	OUT FLOW	RPM	BHP	OUT FLOW
7150	2217	310	2.40	22726																					
13750	4264	400	6.11	43220	552	13.98	43201	672	23.30	44662	774	33.76	45836												
20350	6310	513	13.85	66011	641	24.15	63444	745	35.70	63477	836	48.10	64211	918	61.29	64850	996	75.82	66012	1069	91.27	67299			
26950	8357	637	27.30	87687	744	40.46	85785	838	54.30	84203	920	69.12	83900	995	84.76	84101	1065	101.06	84669						
33550	10403	768	48.57	108976	857	64.16	108334	940	80.95	106461	1016	98.01	105027												
40150	12450	902	79.38	130129	979	97.72	130718	1051	117.04	129000															
46750	14496	1038	121.63	151269																					

XV5 (Extra High Velocity Nozzle)

Nozzle Outlet Area: 3.22 ft²

FAN INLET CFM	NOZ-ZLE OV	1" SP			3" SP			5" SP			7" SP			9" SP			11" SP			13" SP			15" SP		
		RPM	BHP	OUT FLOW	RPM	BHP	OUT FLOW	RPM	BHP	OUT FLOW	RPM	BHP	OUT FLOW	RPM	BHP	OUT FLOW	RPM	BHP	OUT FLOW	RPM	BHP	OUT FLOW	RPM	BHP	OUT FLOW
5425	1682	295	1.73	16509																					
11275	3496	390	4.69	34275	537	10.94	33801	649	18.11	34602	745	26.19	35600												
17125	5310	504	10.79	53826	633	19.49	51534	733	28.83	51162	819	38.74	51387	896	49.19	51829	968	60.45	52508	1034	72.08	52976			
22975	7124	629	21.51	72619	739	32.90	70754	832	44.60	69249	912	56.86	68737	984	69.75	68748	1050	82.94	68858						
28825	8938	761	38.59	91051	855	52.52	90322	939	67.17	88716	1014	81.76	87393												
34675	10752	896	63.46	109319	978	80.00	109509	1053	97.31	108200															
40525	12566	1034	97.97	127674																					

Class II = Light Blue section

Class III = Dark Blue section

Underlined figures indicate maximum static efficiency.

NOTES:

1. Performance certified is for installation Type A: Free inlet, free outlet.
2. Power rating (BHP) does not include transmission losses.
3. Performance ratings do not include the effects of appurtenances (accessories).
4. Performance ratings do not include the effects of crosswinds.

660 BAIFE

Impeller Type: Airfoil **Max Class I RPM = 592** **Max Class III RPM = 973** **Windband Outlet Area: 52.14 ft²**
Impeller Dia.: 66.00" **Max Class II RPM = 767** **Tip Speed FPM = 17.28 x RPM**

LV (Low Velocity Nozzle)

Nozzle Outlet Area: 15.63 ft²

FAN INLET CFM	NOZ-ZLE OV	1" SP			3" SP			5" SP			7" SP			9" SP			11" SP			13" SP			15" SP		
		RPM	BHP	OUT FLOW	RPM	BHP	OUT FLOW	RPM	BHP	OUT FLOW	RPM	BHP	OUT FLOW	RPM	BHP	OUT FLOW	RPM	BHP	OUT FLOW	RPM	BHP	OUT FLOW	RPM	BHP	OUT FLOW
16075	1028	252	3.45	27744																					
34975	2237	333	9.33	58388	452	21.94	56870	562	37.79	60665	660	56.33	66740	743	75.72	69158									
53875	3446	442	21.70	90359	539	39.73	89475	617	58.40	87516	692	78.97	87581	765	101.61	89505	836	126.74	92200	905	154.19	96644	968	182.11	99644
72775	4655	562	43.52	122441	648	68.26	122251	714	92.27	121226	774	117.10	120020	830	142.31	118287	886	169.56	117860	941	197.96	118423			
91675	5864	689	78.53	154728	755	108.18	153521	824	140.41	154107	877	170.54	153266	925	200.82	152212	972	232.00	151070						
110575	7073	819	130.07	187001	872	164.62	185498	930	202.26	185365															
129475	8282	951	201.75	219332																					

LV7 (Low Velocity Nozzle)

Nozzle Outlet Area: 15.63 ft²

FAN INLET CFM	NOZ-ZLE OV	1" SP			3" SP			5" SP			7" SP			9" SP			11" SP			13" SP			15" SP		
		RPM	BHP	OUT FLOW	RPM	BHP	OUT FLOW	RPM	BHP	OUT FLOW	RPM	BHP	OUT FLOW	RPM	BHP	OUT FLOW	RPM	BHP	OUT FLOW	RPM	BHP	OUT FLOW	RPM	BHP	OUT FLOW
10725	686	261	2.77	22957																					
24950	1596	324	5.62	40753	451	15.58	39174	580	30.89	49221	703	51.39	66454	794	70.71	74070									
39175	2506	430	12.59	63887	532	25.22	63803	613	39.50	62816	693	56.72	62023	774	77.15	62709	855	100.96	64144	940	130.14	82202			
53400	3416	554	25.87	87306	632	41.01	86992	707	58.75	87084	768	77.00	86554	827	96.95	85722	886	119.23	85150	944	143.36	84321			
67625	4326	685	47.77	110896	742	64.72	110107	807	85.48	110277	869	108.17	110542	920	130.49	110167	967	153.53	109593						
81850	5235	819	80.49	134505	865	99.95	133708	913	121.61	133160	967	146.85	133246												
96075	6145	954	126.08	158010																					

LV5 (Low Velocity Nozzle)

Nozzle Outlet Area: 15.63 ft²

FAN INLET CFM	NOZ-ZLE OV	1" SP			3" SP			5" SP			7" SP			9" SP			11" SP			13" SP			15" SP		
		RPM	BHP	OUT FLOW	RPM	BHP	OUT FLOW	RPM	BHP	OUT FLOW	RPM	BHP	OUT FLOW	RPM	BHP	OUT FLOW	RPM	BHP	OUT FLOW	RPM	BHP	OUT FLOW	RPM	BHP	OUT FLOW
7575	485	264	2.21	15667																					
18950	1212	327	4.35	30593	461	12.71	28635	583	24.56	29971	701	40.68	42502	794	56.90	47844	873	73.29	50792						
30325	1940	430	9.36	49925	543	20.17	48498	629	32.29	46980	710	46.55	45837	789	63.08	45626	866	81.88	46462	941	103.07	50037			
41700	2667	552	18.91	69514	645	32.40	68196	725	47.51	67227	789	62.85	65934	852	80.12	65037	911	98.42	63879	970	118.76	63285			
53075	3395	682	34.69	89130	751	49.77	87530	826	68.14	86735	892	87.49	86049	946	106	85068									
64450	4122	815	58.23	108624	871	75.45	107102	929	95.00	105993															
75825	4850	950	91.24	128099																					

MV (Medium Velocity Nozzle)

Nozzle Outlet Area: 11.73 ft²

FAN INLET CFM	NOZ-ZLE OV	1" SP			3" SP			5" SP			7" SP			9" SP			11" SP			13" SP			15" SP		
		RPM	BHP	OUT FLOW	RPM	BHP	OUT FLOW	RPM	BHP	OUT FLOW	RPM	BHP	OUT FLOW	RPM	BHP	OUT FLOW	RPM	BHP	OUT FLOW	RPM	BHP	OUT FLOW	RPM	BHP	OUT FLOW
21025	1792	271	4.73	38829																					
37300	3179	364	12.34	68329	472	25.17	68283	578	41.87	73201															
53575	4567	475	27.66	102202	559	44.28	96498	635	62.89	97263	708	83.34	98984	783	107.33	102692	854	132.99	106284						
69850	5954	586	51.78	133939	667	76.14	129813	726	97.05	125876	785	120.84	126090	842	145.72	127116	898	172.20	128458	955	201.31	130466			
86125	7341	704	89.13	166052	778	121.40	163691	833	148.05	158774	881	173.78	155518	929	202.27	155281									
102400	8728	825	142.59	198172	887	180.15	195808	946	217.92	193715															
118675	10115	947	214.72	230082																					

MV7 (Medium Velocity Nozzle)

Nozzle Outlet Area: 11.73 ft²

FAN INLET CFM	NOZ-ZLE OV	1" SP			3" SP			5" SP			7" SP			9" SP			11" SP			13" SP			15" SP		
		RPM	BHP	OUT FLOW	RPM	BHP	OUT FLOW	RPM	BHP	OUT FLOW	RPM	BHP	OUT FLOW	RPM	BHP	OUT FLOW	RPM	BHP	OUT FLOW	RPM	BHP	OUT FLOW	RPM	BHP	OUT FLOW
17800	1517	279	3.68	32294																					
30150	2570	373	8.64	54652	480	18.70	55028	583	31.99	58895															
42500	3623	484	18.40	81019	566	30.73	76254	641	44.81	76799	715	61.16	78809	788	79.95	81733	861	101.50	84483						
54850	4675	594	33.22	105781	670	49.88	100393	731	66.21	98512	790	84.07	98740	846	102.79	99354	904	124.13	101063	961	147.13	103224			
67200	5728	708	55.22	130310	783	78.48	127472	833	96.20	121956	883	116.33	120696	932	137.90	120684									
79550	6781	826	86.53	155059	891	113.99	152417	945	138.89	148981															
91900	7833	945	128.36	179633																					

MV5 (Medium Velocity Nozzle)

Nozzle Outlet Area: 11.73 ft²

FAN INLET CFM	NOZ-ZLE OV	1" SP			3" SP			5" SP			7" SP			9" SP			11" SP			13" SP			15" SP		
		RPM	BHP	OUT FLOW	RPM	BHP	OUT FLOW	RPM	BHP	OUT FLOW	RPM	BHP	OUT FLOW	RPM	BHP	OUT FLOW	RPM	BHP	OUT FLOW	RPM	BHP	OUT FLOW	RPM	BHP	OUT FLOW
13500	1151	282	2.89	23490																					
23425	1997	375	6.52	40143	488	15.00	40595	591	26.09	43152															
33350	2843	486	13.70	60098	576	24.24	56857	654	36.10	57202	729	49.87	58567	802	65.70	60666	873	83.47	62333						
43275	3689	594	24.28	78769	679	38.44	74793	746	52.62	73816	808	67.83	74022	866	83.86	74528	924	101.70	75566						
53200	4535	706	39.87	97283	792	59.82	95279	848	75.26	91439	902	92.56	90675	954	111.03	90738									
63125	5381	822	61.93	115921	900	86.14	114314	959	107.08	111563															
73050	6227	940	91.57	134554																					

Class II = Light Blue section Class III = Dark Blue section Underlined figures indicate maximum static efficiency.

NOTES:
1. Performance certified is for installation Type A: Free inlet, free outlet.
2. Power rating (BHP) does not include transmission losses.
3. Performance ratings do not include the effects of appurtenances (accessories).
4. Performance ratings do not include the effects of crosswinds.

HV (High Velocity Nozzle)

Nozzle Outlet Area: 7.83 ft²

FAN INLET CFM	NOZ-ZLE OV	1" SP			3" SP			5" SP			7" SP			9" SP			11" SP			13" SP			15" SP		
		RPM	BHP	OUT FLOW	RPM	BHP	OUT FLOW	RPM	BHP	OUT FLOW	RPM	BHP	OUT FLOW	RPM	BHP	OUT FLOW	RPM	BHP	OUT FLOW	RPM	BHP	OUT FLOW	RPM	BHP	OUT FLOW
14150	1807	266	3.73	32005																					
28150	3596	339	9.58	60097	473	22.10	64926	585	37.49	63121	679	53.99	62688												
42150	5384	450	22.85	91409	542	38.13	91297	634	56.25	95615	719	77.06	96780	797	99.96	95228	868	123.06	93912	935	147.40	93891			
56150	7172	570	46.59	123425	642	65.88	119767	711	86.66	121122	780	109.56	124350	849	134.68	127611	914	161.77	129324						
70150	8960	694	84.18	155347	755	107.84	151598	811	132.54	149515	866	158.19	150321	921	185.36	152855									
84150	10748	821	139.40	187356	873	167.17	183618	922	196.13	181034	968	225.58	179320												
98150	12537	950	215.99	219433																					

HV7 (High Velocity Nozzle)

Nozzle Outlet Area: 7.83 ft²

FAN INLET CFM	NOZ-ZLE OV	1" SP			3" SP			5" SP			7" SP			9" SP			11" SP			13" SP			15" SP		
		RPM	BHP	OUT FLOW	RPM	BHP	OUT FLOW	RPM	BHP	OUT FLOW	RPM	BHP	OUT FLOW	RPM	BHP	OUT FLOW	RPM	BHP	OUT FLOW	RPM	BHP	OUT FLOW	RPM	BHP	OUT FLOW
12100	1546	268	2.92	27251																					
23400	2989	343	6.78	50169	475	16.65	53473	584	28.92	51811	677	42.77	52229												
34700	4432	454	15.47	75680	546	27.09	75849	638	41.37	79420	721	57.91	79132	796	75.65	77202	866	94.30	76712	931	113.96	76615			
46000	5876	573	30.69	101842	645	45.04	98597	714	60.73	100084	783	78.34	102560	852	98.29	105190	916	119.94	105688						
57300	7319	697	54.81	128175	757	71.94	124425	813	90.29	122713	869	109.88	124013	924	130.66	126014									
68600	8762	823	89.80	154380	874	109.64	150614	923	131.02	148200	970	153.31	147065												
79900	10206	950	137.68	180440																					

HV5 (High Velocity Nozzle)

Nozzle Outlet Area: 7.83 ft²

FAN INLET CFM	NOZ-ZLE OV	1" SP			3" SP			5" SP			7" SP			9" SP			11" SP			13" SP			15" SP		
		RPM	BHP	OUT FLOW	RPM	BHP	OUT FLOW	RPM	BHP	OUT FLOW	RPM	BHP	OUT FLOW	RPM	BHP	OUT FLOW	RPM	BHP	OUT FLOW	RPM	BHP	OUT FLOW	RPM	BHP	OUT FLOW
9075	1159	266	2.25	19450																					
18450	2357	342	5.09	37794	477	13.26	40288	584	23.37	39019	675	34.69	39030												
27825	3554	452	11.44	57722	551	21.27	57951	644	33.16	60465	727	46.90	60926	801	61.78	59543	869	77.31	59064	932	93.48	58689			
37200	4752	570	22.49	78288	651	34.93	76050	724	48.30	77172	794	63.11	78887	863	79.76	80869	927	97.78	81835						
46575	5949	694	40.13	99135	762	54.98	96231	824	70.96	95171	882	87.40	95911	939	105.14	97424									
55950	7147	819	65.50	119684	879	83.20	116941	933	101.56	115068															
65325	8344	947	100.81	140418																					

XV (Extra High Velocity Nozzle)

Nozzle Outlet Area: 3.90 ft²

FAN INLET CFM	NOZ-ZLE OV	1" SP			3" SP			5" SP			7" SP			9" SP			11" SP			13" SP			15" SP		
		RPM	BHP	OUT FLOW	RPM	BHP	OUT FLOW	RPM	BHP	OUT FLOW	RPM	BHP	OUT FLOW	RPM	BHP	OUT FLOW	RPM	BHP	OUT FLOW	RPM	BHP	OUT FLOW	RPM	BHP	OUT FLOW
9675	2479	286	3.71	29872																					
18150	4650	371	9.62	55666	508	21.34	55882	613	34.54	57499	703	49.30	58794												
26625	6822	472	21.52	84435	591	37.28	81072	685	54.37	81240	766	72.25	82133	839	91.19	83082	907	111.48	84455	971	133.07	85903			
35100	8993	582	41.77	112354	684	62.09	108773	771	83.19	107028	845	105.13	106681	913	128.07	107141									
43575	11164	698	73.40	139439	786	98.50	137606	864	123.89	134784	934	149.66	133060												
52050	13336	817	119.00	166311	893	148.23	166146	963	178.67	163258															
60525	15507	938	181.34	193155																					

XV7 (Extra High Velocity Nozzle)

Nozzle Outlet Area: 3.90 ft²

FAN INLET CFM	NOZ-ZLE OV	1" SP			3" SP			5" SP			7" SP			9" SP			11" SP			13" SP			15" SP		
		RPM	BHP	OUT FLOW	RPM	BHP	OUT FLOW	RPM	BHP	OUT FLOW	RPM	BHP	OUT FLOW	RPM	BHP	OUT FLOW	RPM	BHP	OUT FLOW	RPM	BHP	OUT FLOW	RPM	BHP	OUT FLOW
8650	2216	282	2.91	27564																					
16625	4260	364	7.41	52402	502	16.93	52333	611	28.20	54078	704	40.90	55629												
24600	6303	466	16.72	79782	582	29.11	76554	677	43.14	76723	760	58.19	77695	835	74.26	78641	906	91.88	80103	971	110.13	81068			
32575	8346	579	33.02	106080	676	48.87	103700	761	65.47	101646	836	83.50	101412	904	102.35	101593	967	121.80	102070						
40550	10389	697	58.47	131610	779	77.60	131061	854	97.74	128665	923	118.31	126895												
48525	12433	819	95.69	157248	889	117.83	157934	955	141.39	155969															
56500	14476	943	146.87	182905																					

XV5 (Extra High Velocity Nozzle)

Nozzle Outlet Area: 3.90 ft²

FAN INLET CFM	NOZ-ZLE OV	1" SP			3" SP			5" SP			7" SP			9" SP			11" SP			13" SP			15" SP		
		RPM	BHP	OUT FLOW	RPM	BHP	OUT FLOW	RPM	BHP	OUT FLOW	RPM	BHP	OUT FLOW	RPM	BHP	OUT FLOW	RPM	BHP	OUT FLOW	RPM	BHP	OUT FLOW	RPM	BHP	OUT FLOW
6575	1685	268	2.09	19925																					
13650	3497	355	5.69	41584	489	13.30	41108	590	21.91	41869	677	31.65	42987												
20725	5310	458	13.04	65091	576	23.65	62488	667	34.99	62063	745	46.97	62294	815	59.62	62837	880	73.15	63535	940	87.22	64101			
27800	7123	572	26.05	87904	672	39.84	85654	757	54.10	83947	829	68.78	83150	895	84.53	83298	955	100.50	83433						
34875	8935	692	46.73	110205	778	63.72	109447	853	81.09	107198	922	98.99	105790												
41950	10748	815	76.91	132357	889	96.77	132487	957	117.64	130861															
49025	12561	940	118.55	154486																					

Class II = Light Blue section

Class III = Dark Blue section

Underlined figures indicate maximum static efficiency.

NOTES:

1. Performance certified is for installation Type A: Free inlet, free outlet.
2. Power rating (BHP) does not include transmission losses.
3. Performance ratings do not include the effects of appurtenances (accessories).
4. Performance ratings do not include the effects of crosswinds.

Arrangement 1

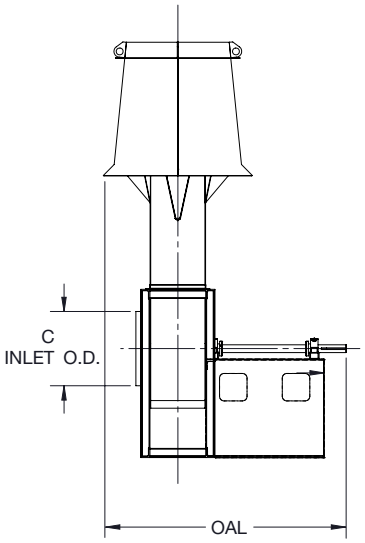

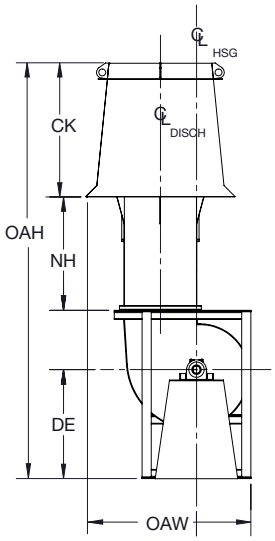

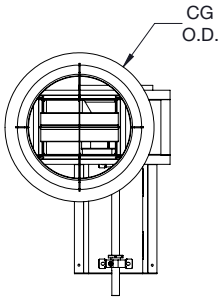

TOP VIEW

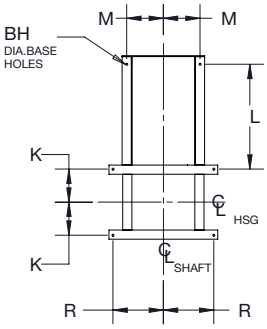

FOUNDATION PLAN

NOTES:
1. 'CW' rotation is shown, 'CCW' rotation is similar but opposite.

FAN SIZE	OAH	OAL						OAW	C	CG	CK	DE	NH
		CLASS I & II			CLASS III								
		LV, MV, HV, XV	LV7, MV7, HV7, XV7	LV5, MV5, HV5, XV5	LV, MV, HV, XV	LV7, MV7, HV7, XV7	LV5, MV5, HV5, XV5						
122	69.21	30.49	30.49	29.71	31.49	31.49	30.71	29.32	13.25	24.99	23.46	14.50	20.50
135	75.95	32.80	32.27	31.93	33.80	33.27	32.92	31.87	14.56	27.55	25.91	15.75	22.54
150	84.53	36.89	36.32	35.95	37.89	37.32	36.95	35.06	16.19	30.60	28.73	17.75	25.11
165	92.36	39.17	38.51	38.07	40.04	39.42	38.95	38.15	17.75	33.66	31.60	19.00	27.63
182	91.77	43.14	42.42	41.96	44.52	43.83	43.33	42.75	19.50	37.23	31.74	21.00	23.53
200	100.15	46.46	45.68	45.15	47.84	47.09	46.52	46.28	21.38	40.50	34.78	22.75	25.81
222	110.59	52.75	51.88	51.29	54.13	53.28	52.66	51.05	23.75	45.39	38.69	25.50	28.71
245	121.72	57.92	56.95	56.33	59.79	58.83	58.20	56.65	26.06	49.98	42.61	28.00	31.61
270	119.77	63.44	62.38	61.66	65.31	64.25	63.53	62.34	28.50	55.08	35.66	30.50	32.18
300	127.67	78.19	77.00	76.22	75.81	74.62	73.84	72.21	31.63	67.20	39.81	28.50	35.55
330	140.17	82.07	80.75	79.88	79.07	77.75	76.88	76.26	34.75	67.32	43.59	31.00	39.33
365	154.21	87.04	85.61	84.64	85.54	84.11	83.14	84.36	38.50	74.46	48.21	33.50	43.51
402	170.13	92.84	91.25	90.19	93.84	92.24	91.19	92.97	42.44	82.11	52.85	37.00	48.28
445	187.18	100.98	99.23	98.05	103.11	101.36	100.17	102.74	46.88	90.78	58.77	40.00	53.04
490	206.12	107.67	105.73	104.45	112.42	110.48	109.20	113.17	51.63	99.96	64.72	44.00	58.41
542	228.38	120.28	118.12	116.72	120.90	118.74	117.34	125.24	57.13	110.67	71.65	49.00	64.67
600	252.46	128.11	125.73	124.17	132.48	130.11	128.54	138.55	63.13	122.40	79.27	54.00	71.50
660	277.29	140.29	137.70	135.95	144.54	141.95	140.20	152.13	69.38	134.64	87.16	59.00	78.69

FAN SIZE	K			L		M		R	BH
	LV, MV, HV, XV	LV7, MV7, HV7, XV7	LV5, MV5, HV5, XV5	CL. I & II	CL. III	CL. I & II	CL. III		
122	6.12	6.12	5.34	9.63	7.50	6.75	6.50	9.50	0.44
135	6.65	6.12	5.77	10.13	8.00	7.38	7.13	10.13	0.44
150	7.21	6.65	6.27	11.63	9.50	8.25	8.00	11.00	0.44
165	7.84	7.18	6.74	12.13	9.50	8.75	8.75	11.79	0.44
182	9.02	8.30	7.84	12.63	10.00	9.63	9.63	13.13	0.44
200	9.71	8.93	8.40	13.63	11.00	10.63	10.63	14.13	0.56
222	10.55	9.68	9.09	15.88	13.50	11.75	11.50	15.25	0.56
245	11.93	10.96	10.34	16.88	14.50	12.88	12.63	16.88	0.56
270	12.90	11.84	11.12	18.88	16.50	14.13	13.88	18.13	0.56
300	14.09	12.90	12.12	26.13	18.50	15.88	15.63	20.13	0.56
330	15.28	13.97	13.09	28.75	20.50	17.38	17.13	21.63	0.56
365	16.69	15.25	14.28	28.75	22.00	18.88	18.63	23.63	0.56
402	18.16	16.56	15.50	29.50	24.00	20.88	20.38	25.38	0.81
445	20.34	18.59	17.41	30.63	26.50	22.88	22.38	27.88	0.81
490	22.06	20.13	18.84	31.00	28.50	25.38	24.88	30.38	0.81
542	24.19	22.03	20.63	36.13	29.50	27.63	27.13	33.13	0.81
600	26.41	24.03	22.47	35.88	32.50	30.63	30.13	36.13	0.81
660	28.84	26.25	24.50	39.00	35.50	33.13	32.63	39.13	0.81

BAIFE - BC1005074D
BCIFE - BC1005070D

TCF
TWIN CITY FAN

Arrangement 9

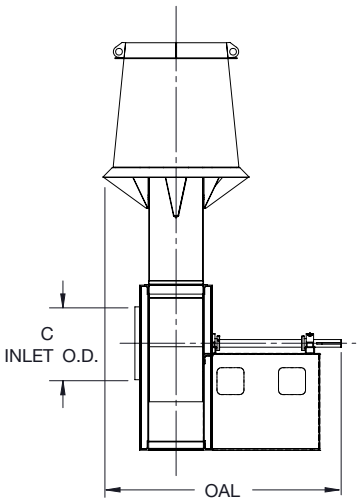

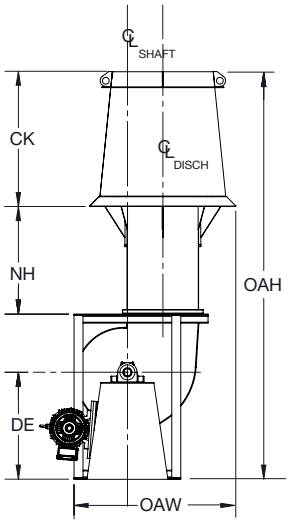

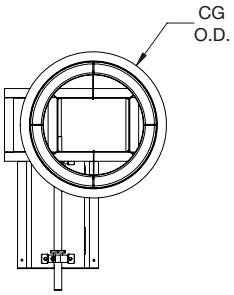

TOP VIEW

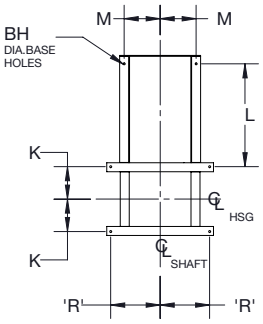

FOUNDATION PLAN

NOTES:
1. 'CCW' rotation is shown, 'CW' rotation is similar but opposite.

FAN SIZE	OAH		OAL						OAW	C	CG	CK	DE	
	CL. I & II	CL. III	CLASS I & II			CLASS III							CL. I & II	CL. III
			LV, MV, HV, XV	LV7, MV7, HV7, XV7	LV5, MV5, HV5, XV5	LV, MV, HV, XV	LV7, MV7, HV7, XV7	LV5, MV5, HV5, XV5						
122	69.21	75.46	34.99	34.99	34.21	41.85	41.85	41.06	37.92	13.25	24.99	23.46	14.50	20.75
135	75.95	83.70	39.30	38.77	38.42	49.79	49.26	48.92	41.14	14.56	27.55	25.91	15.75	23.50
150	84.53	90.53	41.89	41.32	40.95	51.88	51.31	50.94	45.10	16.19	30.60	28.73	17.75	23.75
165	92.36	97.11	46.54	45.88	45.45	54.03	53.38	52.94	48.98	17.75	33.66	31.60	19.00	23.75
182	91.77	97.02	53.89	53.17	52.70	59.50	58.79	58.32	55.54	19.50	37.23	31.74	21.00	26.25
200	100.15	106.90	56.21	55.43	54.90	64.58	63.80	63.26	59.99	21.38	40.50	34.78	22.75	29.50
222	110.59	115.09	59.75	58.87	58.28	68.37	67.49	66.90	66.25	23.75	45.39	38.69	25.50	30.00
245	121.72	123.97	63.42	62.45	61.83	71.54	70.58	69.95	73.73	26.06	49.98	42.61	28.00	30.25
270	119.77	122.27	69.81	68.75	68.03	77.19	76.13	75.41	80.77	28.50	55.08	35.66	30.50	33.00
300	127.67	132.67	78.19	77.00	76.22	84.94	83.75	82.97	92.21	31.63	67.20	39.81	28.50	33.50
330	140.17	143.17	82.07	80.75	79.88	86.19	84.88	84.00	97.97	34.75	67.32	43.59	31.00	34.00
365	154.21	158.21	87.04	85.61	84.64	99.17	97.73	96.76	107.86	38.50	74.46	48.21	33.50	37.50
402	170.13	173.38	92.84	91.24	90.18	112.21	110.62	109.56	118.43	42.44	82.11	52.85	37.00	40.25
445	187.18	188.18	100.98	99.23	98.05	118.23	116.48	115.30	131.45	46.88	90.78	58.77	40.00	41.00
490	206.12	206.12	107.67	105.73	104.45	124.54	122.61	121.32	144.29	51.63	99.96	64.72	44.00	44.00
542	228.38	228.38	120.27	118.12	116.71	133.15	130.99	129.59	159.09	57.13	110.67	71.65	49.00	49.00
600	252.46	252.46	128.11	125.73	124.17	141.23	138.86	137.29	175.45	63.13	122.40	79.27	54.00	54.00
660	277.29	277.29	140.29	137.70	135.95	150.79	148.20	146.45	192.13	69.38	134.64	87.16	59.00	59.00

FAN SIZE	NH	K			L		M		R	BH	MAX MOTOR FRAME	
		LV, MV, HV, XV	LV7, MV7, HV7, XV7	LV5, MV5, HV5, XV5	CL. I & II	CL. III	CL. I & II	CL. III			CL. I & II	CL. III
122	20.50	6.12	6.12	5.34	14.13	17.37	6.75	6.52	9.50	0.44	145T	215T
135	22.54	6.65	6.12	5.77	16.63	22.75	7.38	7.14	10.13	0.44	184T	256T
150	25.11	7.21	6.65	6.27	16.63	22.75	8.25	8.02	11.00	0.44	184T	256T
165	27.63	7.84	7.18	6.74	19.50	22.75	8.75	8.77	11.79	0.44	215T	256T
182	23.53	9.02	8.30	7.84	23.38	24.50	9.63	9.64	13.13	0.44	254T	286T
200	25.81	9.71	8.93	8.40	23.38	26.00	10.63	10.64	14.13	0.56	254T	326T
222	28.71	10.55	9.68	9.09	22.88	26.50	11.75	11.51	15.25	0.56	256T	326T
245	31.61	11.93	10.96	10.34	22.38	26.00	12.88	12.64	16.88	0.56	256T	326T
270	32.18	12.90	11.84	11.12	25.25	27.13	14.13	13.89	18.13	0.56	284T	365T
300	35.55	14.09	12.90	12.12	26.13	27.63	15.88	15.64	20.13	0.56	286T	365T
330	39.33	15.28	13.97	13.09	28.75	27.63	17.38	17.14	21.63	0.56	324T	365T
365	43.51	16.69	15.25	14.28	28.75	34.38	18.88	18.64	23.63	0.56	324T	405T
402	48.28	18.16	16.56	15.50	29.50	41.13	20.88	20.39	25.38	0.81	326T	405T
445	53.04	20.34	18.59	17.41	30.63	40.63	22.88	22.39	27.88	0.81	364T	405T
490	58.41	22.06	20.13	18.84	31.00	40.63	25.38	24.89	30.38	0.81	364T	405T
542	64.67	24.19	22.03	20.63	36.13	41.25	27.63	27.14	33.13	0.81	404T	405T
600	71.50	26.41	24.03	22.47	35.88	41.25	30.63	30.14	36.13	0.81	404T	405T
660	78.69	28.84	26.25	24.50	39.00	42.25	33.13	32.64	39.13	0.81	405T	405T

BAIFE - BC1005076D
BCIFE - BC1005072D

Arrangement 4

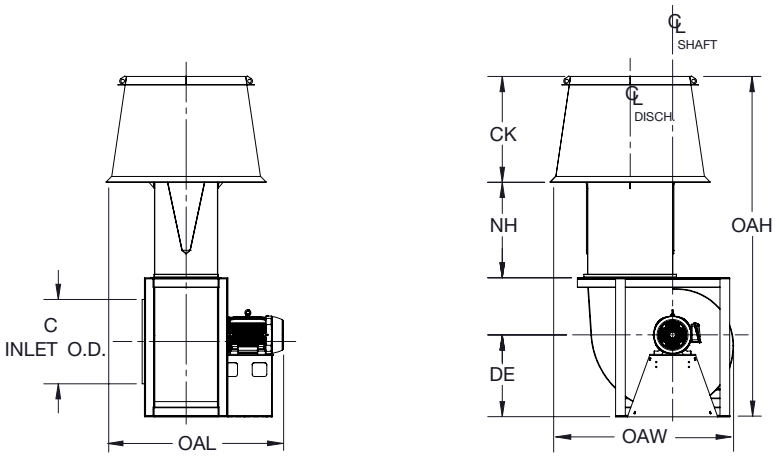

FAN SIZE	MOTOR FRAME	OAH	OAL			OAW	C	CK	DE	NH
			LV, MV, HV, XV	LV7, MV7, HV7, XV7	LV5, MV5, HV5, XV5					
122	145T	69.21	30.31	30.31	29.56	29.32	13.25	23.46	14.50	20.50
135	145T 184T	75.95	33.41	33.41	32.53	31.87	14.56	25.91	15.75	22.54
150	145T 184T	84.53	35.55	34.86	34.49	35.06	16.19	28.73	17.75	25.11
165	145T 184T 215T	92.36	41.83	41.21	40.77	38.15	17.75	31.60	19.00	27.63
182	145T 184T 215T 256T	91.77	49.00	48.31	47.81	42.75	19.50	31.74	21.00	23.53
200	184T 215T 256T	100.15	51.13	50.38	49.81	46.28	21.38	34.78	22.75	25.81
222	184T 215T 256T	110.59	55.08	54.20	53.64	51.36	23.75	38.69	25.50	28.71
245	215T 256T	121.72	58.05	57.12	56.49	56.65	26.06	42.61	28.00	31.61
270	215T 256T 286T	119.77	63.79	62.73	62.04	62.34	28.50	35.66	30.50	32.18
300	215T 256T 286T	127.67	70.79	69.60	71.48	72.21	31.63	39.81	28.50	35.55
330	256T 286T 326T	140.17	73.54	72.22	71.35	76.26	34.75	43.59	31.00	39.33
365	256T 286T 326T	154.21	78.48	77.04	76.11	84.36	38.50	48.21	33.50	43.51

BAIFE - BC1005075D
BCIFE - BC1005071D

Arrangement 4

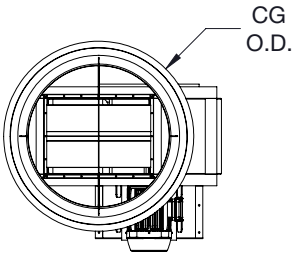

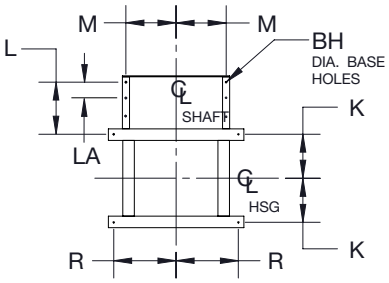

FAN SIZE	MOTOR FRAME	CG	K			L	LA	M	R	BH
			LV, MV, HV, XV	LV7, MV7, HV7, XV7	LV5, MV5, HV5, XV5					
122	145T	24.99	6.12	6.12	5.34	8.81	–	6.75	9.50	0.44
135	145T	27.55	6.65	6.12	5.77	8.69	–	7.38	10.13	0.44
	184T					10.44	–			
150	145T	30.60	7.21	6.65	6.27	8.63	–	8.25	11.00	0.44
	184T					10.38	–			
165	145T	33.66	7.84	7.18	6.74	8.38	–	8.75	11.79	0.44
	184T					10.13	–			
	215T					13.00	–			
182	145T	37.23	9.02	8.30	7.84	8.75	–	9.63	13.13	0.44
	184T					10.50	–			
	215T					12.25	–			
	256T					16.25	–			
200	184T	40.50	9.71	8.93	8.40	10.31	–	10.63	14.13	0.56
	215T					12.06	–			
	256T					16.06	–			
222	184T	45.39	10.55	9.68	9.09	11.00	–	11.75	15.25	0.56
	215T					12.75	–			
	256T					16.75	–			
245	215T	49.98	11.93	10.96	10.34	12.06	–	12.88	16.88	0.56
	256T					16.06	–			
270	215T	55.08	12.90	11.84	11.12	11.75	–	14.13	18.13	0.56
	256T					15.75	–			
	286T					17.50	9.25			
300	215T	67.20	14.09	12.90	12.12	11.50	–	15.88	20.13	0.56
	256T					15.50	–			
	286T					17.25	9.00			
330	256T	67.32	15.28	13.97	13.09	14.56	–	17.38	21.63	0.56
	286T					16.31	–			
	326T					18.06	9.41			
365	256T	74.46	16.69	15.25	14.28	14.56	–	18.88	23.63	0.56
	286T					16.31	–			
	326T					18.06	9.41			

BAIFE - BC1005075D
BCIFE - BC1005071D

TCF
TWIN CITY FAN

Arrangement 10

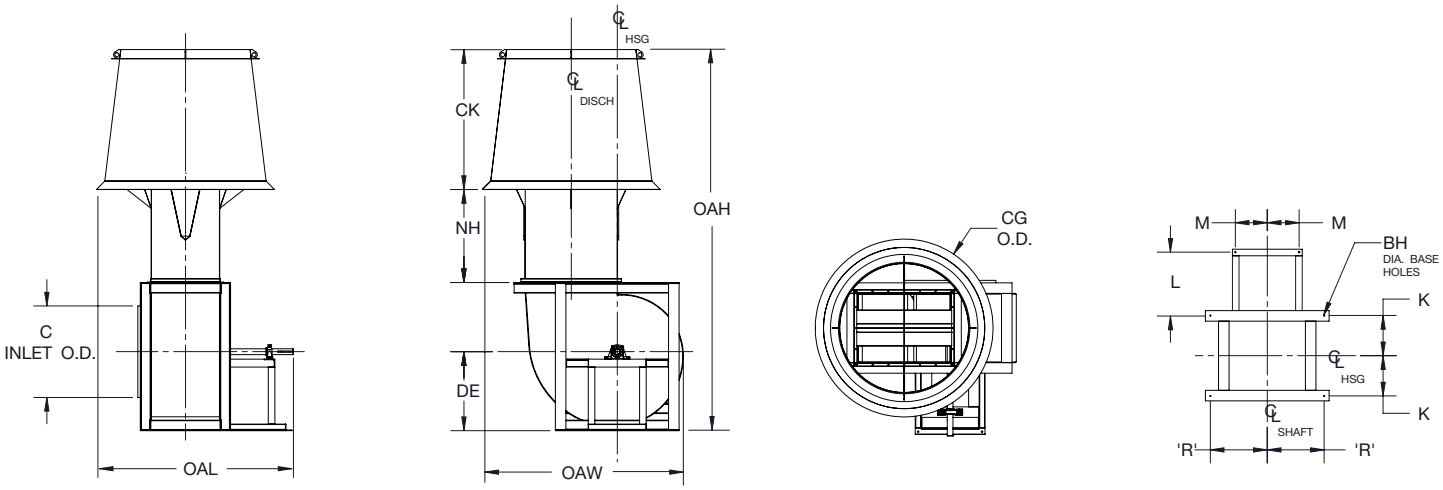

NOTES:
1. 'CW' rotation is shown, 'CCW' rotation is similar but opposite.

FAN SIZE	OAH	OAL			OAW	C	CG	CK	DE	NH	K		
	CL. I & II	CLASS I & II							CL. I & II		LV, MV, HV, XV	LV7, MV7, HV7, XV7	LV5, MV5, HV5, XV5
		LV, MV, HV, XV	LV7, MV7, HV7, XV7	LV5, MV5, HV5, XV5									
122	72.34	39.10	39.10	38.32	29.31	13.25	24.99	23.46	17.63	20.50	6.12	6.12	5.34
135	79.32	43.29	42.76	42.42	31.87	14.56	27.55	25.91	19.13	22.54	6.65	6.12	5.77
150	86.16	45.38	44.82	44.44	35.05	16.19	30.60	28.73	19.38	25.11	7.21	6.65	6.27
165	92.73	47.53	46.88	46.44	38.15	17.75	33.66	31.60	19.38	27.63	7.84	7.18	6.74
182	92.65	55.38	54.66	54.19	42.74	19.50	37.23	31.74	21.88	23.53	9.02	8.30	7.84
200	100.15	57.70	56.92	56.39	46.28	21.38	40.50	34.78	22.75	25.81	9.71	8.93	8.40
222	110.59	60.99	60.12	59.52	51.35	23.75	45.39	38.69	25.50	28.71	10.55	9.68	9.09
245	121.72	64.16	63.19	62.57	56.65	26.06	49.98	42.61	28.00	31.61	11.93	10.96	10.34
270	119.77	70.52	69.46	68.74	62.34	28.50	55.08	35.66	30.50	32.18	12.90	11.84	11.12
300	126.67	70.00	68.81	68.03	72.22	31.63	67.20	39.81	27.50	35.55	14.09	12.90	12.12
330	139.17	72.88	71.57	70.69	76.25	34.75	67.32	43.59	30.00	39.33	15.28	13.97	13.09
365	154.21	79.04	77.61	76.64	84.36	38.50	74.46	48.21	33.50	43.51	16.69	15.25	14.28
402	170.13	86.34	84.74	83.68	92.96	42.44	82.11	52.85	37.00	48.28	18.16	16.56	15.50
445	187.18	92.61	90.86	89.67	102.73	46.88	90.78	58.77	40.00	53.04	20.34	18.59	17.41
490	206.12	98.92	96.98	95.70	113.17	51.63	99.96	64.72	44.00	58.41	22.06	20.13	18.84
542	228.38	112.40	110.24	108.84	125.24	57.13	110.67	71.65	49.00	64.67	24.19	22.03	20.63
600	252.46	120.48	118.11	116.54	138.54	63.13	122.40	79.27	54.00	71.50	26.41	24.03	22.47

FAN SIZE	L	M	R	BH	MAX MOTOR FRAME
122	19.11	7.31	9.50	0.44	184T
135	20.86	8.06	10.13	0.44	215T
150	20.86	8.81	11.00	0.44	215T
165	20.73	9.25	11.79	0.44	215T
182	24.98	10.88	13.13	0.44	256T
200	24.98	10.88	14.13	0.56	256T
222	24.73	11.13	15.25	0.56	256T
245	24.23	11.63	16.88	0.56	256T
270	26.45	12.13	18.13	0.56	286T
300	23.06	12.13	20.13	0.56	286T
330	24.06	12.13	21.63	0.56	326T
365	25.25	12.13	23.63	0.56	326T
402	29.50	13.63	25.38	0.81	286T
445	29.00	13.63	27.88	0.81	286T
490	29.00	13.63	30.38	0.81	326T
542	35.50	16.13	33.13	0.81	365T
600	35.50	16.13	36.13	0.81	365T

BAIFE - BC1005077D
BCIFE - BC1005073D

TCF
TWIN CITY FAN

Mixing Box

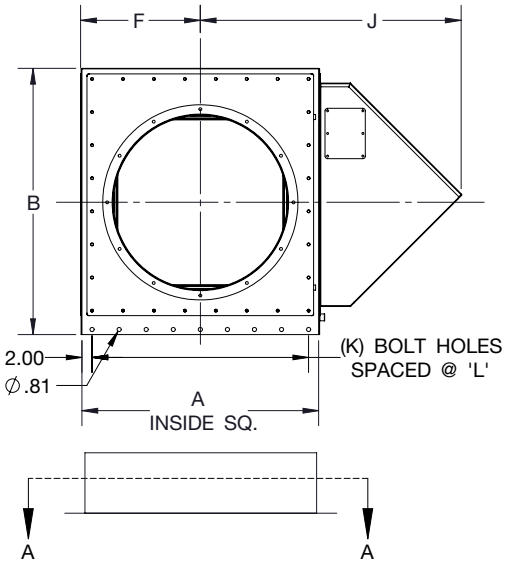

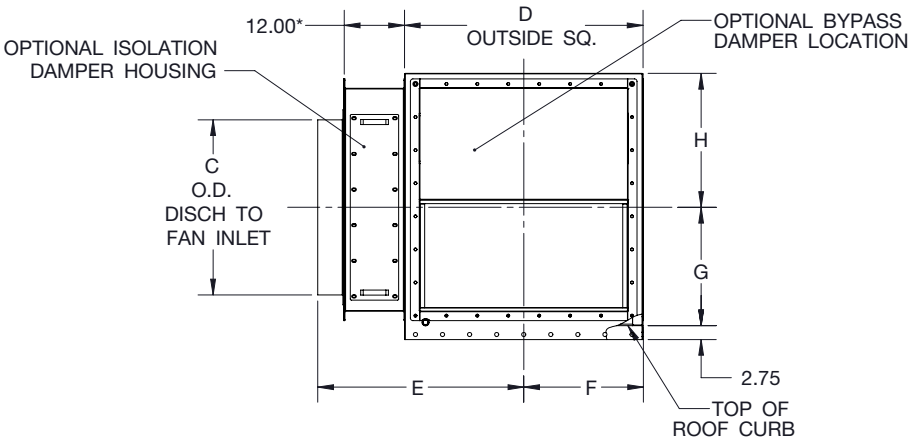

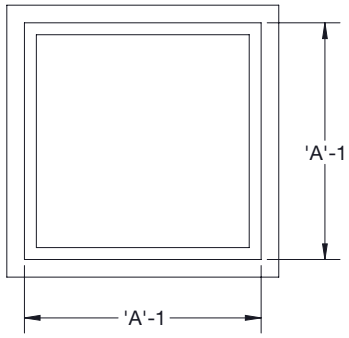

CURB DETAIL
SECTION A-A

NOTES:
1. Isolation damper mount is 12.00" wide. Without damper subtract 12.00" from 'E'.

FAN SIZE	A	B	C	D	E	F	G	H	J	K	L
122	28.00	34.35	13.25	28.21	26.27	14.11	11.50	20.10	33.17	5.00	6.00
135	28.00	34.35	14.56	28.21	26.27	14.11	13.50	18.10	33.17	5.00	6.00
150	28.00	34.35	16.19	28.21	26.27	14.11	14.50	17.10	33.17	5.00	6.00
165	32.00	37.85	17.75	32.21	28.27	16.11	15.00	20.10	36.92	6.00	5.60
182	32.00	37.85	19.50	32.21	28.27	16.11	16.00	19.10	36.92	6.00	5.60
200	36.00	41.85	21.38	36.21	30.27	18.11	17.00	22.10	40.92	7.00	5.33
222	36.00	41.85	23.75	36.21	30.27	18.11	18.00	21.10	40.92	7.00	5.33
245	41.00	46.85	26.06	41.21	32.81	20.61	19.50	24.60	45.92	8.00	5.29
270	41.00	46.85	28.50	41.21	32.81	20.61	20.50	23.60	45.92	8.00	5.29
300	47.00	52.85	31.63	47.21	35.81	23.61	22.00	28.10	51.92	9.00	5.38
330	47.00	52.85	34.75	47.21	35.81	23.61	23.50	26.60	51.92	9.00	5.38
365	55.00	60.88	38.50	55.27	39.81	27.64	25.50	32.63	59.92	11.00	5.10
402	55.00	60.88	42.44	55.27	39.81	27.64	27.50	30.63	59.92	11.00	5.10
445	59.00	64.88	46.88	59.27	41.81	29.64	29.50	32.63	63.92	12.00	5.00
490	64.00	69.88	51.63	64.27	44.31	32.14	32.00	35.13	68.92	13.00	5.00
542	70.00	75.93	57.13	70.36	47.31	35.18	35.00	38.18	74.92	14.00	5.08
600	76.00	81.93	63.13	76.36	50.31	38.18	38.00	41.18	80.92	15.00	5.14
660	82.00	87.93	69.38	82.36	53.31	41.18	41.00	44.18	86.92	16.00	5.20

BC1005069D

Model

BAIFE

Model BAIFE Induced Flow Exhaust Fans, where indicated on drawings and schedules, shall be of the nonoverloading design, and shall be of the size and capacity as indicated in the fan schedule. Induced flow exhaust fans shall be as manufactured by Twin City Fan and Blower, Minneapolis, Minnesota.

PERFORMANCE — Performance ratings shall conform to AMCA Standard 211 (air performance) and 311 (sound performance). Fans shall be tested in accordance with ANSI/AMCA Standard 210 (air performance), 300 (sound performance) and 260 (induced flow fans) in an AMCA accredited laboratory. Fans shall be licensed to bear the AMCA certified ratings seal for induced flow sound and air. Sound certification shall apply to both inlet and outlet sound power levels.

Fans shall be designed for maximum efficiency. Fans shall have a sharply rising pressure characteristic extending through the operating range and continuing to rise well beyond the efficiency peak to assure quiet and stable operation under all conditions. Horsepower characteristics shall be truly self-limiting and shall reach a peak in the normal selection area.

HOUSING — Housings are to be of heavy-gauge, continuously welded construction. Housings with lock seams or partially welded construction are not acceptable. Housings shall be suitably braced to prevent vibration or pulsation. Fan housings shall have tapered spun, aerodynamically designed inlet cones or shrouds providing stable flow and high rigidity. Model BAIFE shall include outlet nozzle, windband, access door and drain with plug.

IMPELLER — Fan impellers shall be die-formed airfoil blade type, continuously welded to the rim and back plate, designed for maximum efficiency and quiet operation. Partial welding will not be acceptable on airfoil blades. Smaller sizes may use extruded aluminum blades. All BAIFE impellers shall be statically and dynamically balanced. The complete fan assembly shall be test balanced at the operating speed prior to shipment.

SHAFT — Shafts shall be AISI 1045 hot rolled steel, accurately turned, ground, polished, and ring gauged for accuracy. Shafts shall be sized for the first critical speed of at least 1.43 times the maximum speed.

BEARINGS — Bearings shall be heavy-duty, grease lubricated, anti-friction ball or roller, self-aligning, pillow block type and selected for a minimum average life (AFBMA L-10) of 200,000 hours at the maximum fan RPM.

DRIVE — Motor sheaves shall be cast iron, variable pitch on applications 10 HP and smaller, and fixed pitch on 15 HP and larger. Drives shall be selected to provide a minimum 2.0 service factor.

NOZZLE AND WINDBAND — A nozzle and windband combination shall be provided to efficiently induce ambient airflow from outside the fan housing and increase discharge velocities to be a recommended minimum of 3,000 FPM without significantly affecting BHP requirements. The windband shall provide a minimum discharge height of between 84" and 120" from roof surface.

OPTIONAL ACCESSORIES — Where required the fans shall be provided with:

- AMCA "A", "B" or "C" spark resistant construction
- Modular mixing plenum box
- Bypass damper with actuator
- Isolation damper with actuator
- Disconnect switches
- Roof curb
- Vortex breaker
- Special coatings (Epoxy, Air-Dry Phenolic, Synthetic Resin) on airstream parts or entire unit
- Special materials of construction

FACTORY RUN TEST — All fans prior to shipment shall be completely assembled and test run as a unit at operating speed or maximum RPM allowed for the particular construction type. Each impeller shall be statically and dynamically balanced in accordance with ANSI/AMCA 204-96 "Balance Quality and Vibration Levels for Fans" to Fan Application Category BV-3, Balance Quality Grade G6.3. Balance readings shall be taken by electronic type equipment in the axial, vertical, and horizontal directions on each of the bearings. Records shall be maintained and a written copy shall be available upon request.

SUBMITTALS — Submittals for approval of equipment shall include copies of outline drawings, AMCA Certified Ratings, and percentage pressure-volume performance curves showing point of operation.

GUARANTEE — The manufacturer shall guarantee the workmanship and materials for its BAIFE Induced Flow Exhaust Fans for at least three (3) years from shipment.

Model

BCIFE

Model BCIFE Induced Flow Exhaust Fans, where indicated on drawings and schedules, shall be of the nonoverloading design, and shall be of the size and capacity as indicated in the fan schedule. Induced flow exhaust fans shall be as manufactured by Twin City Fan and Blower, Minneapolis, Minnesota.

PERFORMANCE — Fans shall be tested in accordance with ANSI/AMCA Standard 210 (air performance) and 300 (sound performance) in an AMCA accredited laboratory.

Fans shall have a sharply rising pressure characteristic extending through the operating range and continuing to rise beyond the peak efficiency to ensure quiet and stable operation. Fans shall have a non-overloading design with self-limiting horsepower characteristics and shall reach a peak in the normal selection area. All fans shall be capable of operating over the minimum pressure class limits as specified in AMCA Standard 99.

HOUSING — Housings are to be of heavy-gauge, continuously welded construction. Housings with lock seams or partially welded construction are not acceptable. Housings shall be suitably braced to prevent vibration or pulsation. Fan housings shall have tapered spun, aerodynamically designed inlet cones or shrouds providing stable flow and high rigidity. Model BCIFE shall include outlet nozzle, windband, access door and drain with plug.

IMPELLER — Fan impellers shall be single thickness plate type, continuously welded to the rim and back plate, designed for maximum efficiency and quiet operation. Partial welding will not be acceptable on backward inclined blades. All BCIFE impellers shall be statically and dynamically balanced. The complete fan assembly shall be test balanced at the operating speed prior to shipment.

SHAFT — Shafts shall be AISI 1045 hot rolled steel, accurately turned, ground, polished, and ring gauged for accuracy. Shafts shall be sized for the first critical speed of at least 1.43 times the maximum speed.

BEARINGS — Bearings shall be heavy-duty, grease lubricated, anti-friction ball or roller, self-aligning, pillow block type and selected for a minimum average life (AFBMA L-10) of 200,000 hours at the maximum fan RPM.

DRIVE — Motor sheaves shall be cast iron, variable pitch on applications 10 HP and smaller, and fixed pitch on 15 HP and larger. Drives shall be selected to provide a minimum 2.0 service factor.

NOZZLE AND WINDBAND — A nozzle and windband combination shall be provided to efficiently induce ambient airflow from outside the fan housing and increase discharge velocities to be a recommended minimum of 3,000 FPM without significantly affecting BHP requirements. The windband shall provide a minimum discharge height of between 84" and 120" from roof surface.

OPTIONAL ACCESSORIES — Where required the fans shall be provided with:

- AMCA "A", "B" or "C" spark resistant construction
- Modular mixing plenum box
- Bypass damper with actuator
- Isolation damper with actuator
- Disconnect switches
- Roof curb
- Vortex breaker
- Special coatings (Epoxy, Air-Dry Phenolic, Synthetic Resin) on airstream parts or entire unit
- Special materials of construction

FACTORY RUN TEST — All fans prior to shipment shall be completely assembled and test run as a unit at operating speed or maximum RPM allowed for the particular construction type. Each impeller shall be statically and dynamically balanced in accordance with ANSI/AMCA 204-96 "Balance Quality and Vibration Levels for Fans" to Fan Application Category BV-3, Balance Quality Grade G6.3. Balance readings shall be taken by electronic type equipment in the axial, vertical, and horizontal directions on each of the bearings. Records shall be maintained and a written copy shall be available upon request.

SUBMITTALS — Submittals for approval of equipment shall include copies of outline drawings, AMCA Certified Ratings, and percentage pressure-volume performance curves showing point of operation.

GUARANTEE — The manufacturer shall guarantee the workmanship and materials for its BCIFE Induced Flow Exhaust Fans for at least three (3) years from shipment.

INDUSTRIAL PROCESS AND COMMERCIAL VENTILATION SYSTEMS

CENTRIFUGAL FANS | UTILITY SETS | PLENUM & PLUG FANS | INLINE CENTRIFUGAL FANS

MIXED FLOW FANS | TUBEAXIAL & VANEAXIAL FANS | PROPELLER WALL FANS | PROPELLER ROOF VENTILATORS

CENTRIFUGAL ROOF & WALL EXHAUSTERS | CEILING VENTILATORS | GRAVITY VENTILATORS | DUCT BLOWERS

RADIAL BLADED FANS | RADIAL TIP FANS | HIGH EFFICIENCY INDUSTRIAL FANS | PRESSURE BLOWERS

LABORATORY EXHAUST FANS | FILTERED SUPPLY FANS | MANCOOLERS | FIBERGLASS FANS | CUSTOM FANS

TCF
TWIN CITY FAN

TWIN CITY FAN & BLOWER

WWW.TCF.COM

5959 TRENTON LANE N | MINNEAPOLIS, MN 55442 | PHONE: 763-551-7600 | FAX: 763-551-7601